Highly-efficient, regulated dual-outputs, ambient energy manager for TEG with optional primary battery

Features

Ultra-low-power start-up:
- Cold start from 60 mV input voltage and 150 µW input power with the optional external module (typical)
- Cold start from 380 mV and 100 µW input power without the optional external module (typical)

Ultra-low-power boost regulator:
- Open-circuit voltage sensing for MPPT every 21 s
- Configurable MPPT with 2-pin programming
- Selectable Voc ratios of 50, 55 or 75 %
- Input voltage operation range from 50 mV to 5 V
- MPPT voltage operation range from 50 mV to 5 V
- Constant impedance matching (ZMPPT)

Integrated 1.2/1.8 V LDO regulator:
- Up to 20 mA load current
- Power gated dynamically by external control
- Selectable output voltage

Integrated 1.8/2.5/3.3 V LDO regulator:
- Up to 80 mA load current with 300 mV drop-out
- Power gated dynamically by external control
- Selectable output voltage

Flexible energy storage management:
- Selectable overcharge and overdischarge protection for any type of rechargeable battery or (super)capacitor
- Fast supercapacitor charging
- Warns the load when battery is running low
- Warns when output voltage regulators are available

Optional primary battery:
- Automatically switches to the primary battery when the secondary battery is exhausted

Integrated balun for dual-cell supercapacitor

Applications

- TEG harvesting
- Industrial monitoring
- Home automation
- Smart agriculture
- Wireless sensor nodes

Description

The AEM20940 is an integrated energy management subsystem that extracts DC power from a TEG to simultaneously store energy in a rechargeable element and supply the system with two independent regulated voltages. The AEM20940 allows to extend battery lifetime and ultimately eliminates the primary energy storage element in a large range of wireless applications like industrial monitoring, home automation and smart agriculture.

The AEM20940 harvests the available input current up to 110 mA. It integrates an ultra-low power boost converter to charge a storage element, such as a Li-ion battery, a thin film battery, a supercapacitor or a conventional capacitor. The boost converter operates with input voltages in a range from 50 mV to 5 V. With its unique cold-start circuit, it can start operating with empty storage elements at an input voltage as low as 380 mVand an input power of just 100 µW.Thanks to an external optional module, the input voltage for coldstart lowers to 60 mV with an input power of just 150 µW.

The low-voltage supply typically drives a microcontroller at 1.2 V or 1.8 V. The high-voltage supply typically drives a radio transceiver at 1.8 V, 2.5 V or 3.3 V. Both are driven by highly-efficient LDO (Low Drop-Out) regulators for low noise and high stability.

Configuration pins determine various operating modes by setting predefined conditions for the energy storage element (overcharge or overdischarge voltages), and by selecting the voltage of the high-voltage supply and the low-voltage supply.

The chip integrates all the active elements for powering a typical wireless sensor. Five capacitors and two inductors are required, available in the small 0402 and 0603 size, respectively. With only seven external components, integration is maximum, footprint and BOM are minimum, optimizing the time-to-market and the costs of WSN designs.

Device information

Part number	Package	Body size
20AEM20940C0000	QFN 28-pin	5 mm x 5 mm

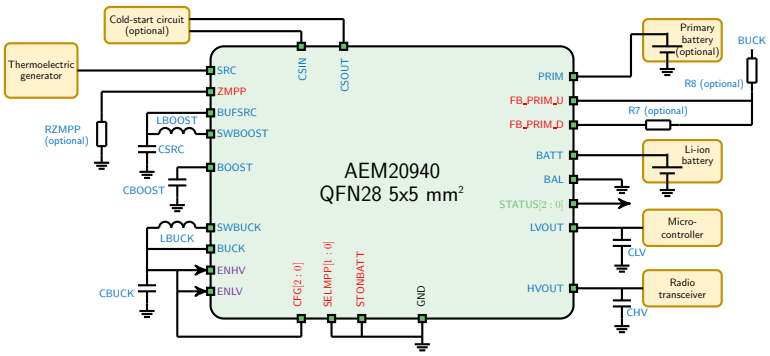

Copyright © 2018 e-peas SA