Memory FeRAM

512K (64K × 8) Bit SPI

MB85RS512LY(AEC-Q100 Compliant)

■ DESCRIPTION

MB85RS512LY is a FeRAM (Ferroelectric Random Access Memory) chip in a configuration of 65,536 words × 8 bits, using the ferroelectric process and silicon gate CMOS process technologies for forming the nonvolatile memory cells. This product is specifically targeted for high-temperature environment such as automobile applications.
MB85RS512LY adopts the Serial Peripheral Interface (SPI).
The MB85RS512LY is able to retain data without using a back-up battery, as is needed for SRAM.
The memory cells used in the MB85RS512LY can be used for 10^{13} read/write operations, which is a significant improvement over the number of read and write operations supported by Flash memory and E^2PROM.
As MB85RS512LY does not need any waiting time in writing process, the write cycle time of MB85RS512LY is much shorter than that of Flash memories or E^2PROM.

PRELIMINARY

■ FEATURES

- Bit configuration : 65,536 words × 8 bits
- Special Sector Region : 256 words × 8 bits
  In this region, data storage after (by) three times reflow based on JEDEC MSL-3 standard condition is guaranteed.
- Unique ID
- Serial Number : 64 bits
  In this region, data storage after (by) three times reflow based on JEDEC MSL-3 standard condition is guaranteed.
- Serial Peripheral Interface : SPI (Serial Peripheral Interfaces)
  Correspondent to SPI mode 0 (0, 0) and mode 3 (1, 1)
- Operating frequency : 50 MHz (Max)
- High endurance : 10^{13} times / byte
- Data retention : 70.4 years (+85 °C)
  19.1 years (+105 °C)
  5.9 years (+125 °C) or more
  Under evaluation for more than 5.9 years(+125 °C)
- Operating power supply voltage : 1.7 V to 1.95 V
- Low power consumption : Operating power supply current 3.0mA (Max@50 MHz)
  Standby current 150μA (Max)
- Operation ambient temperature range : − 40 °C to +125 °C
- Package 8-pin plastic SOP (150mil)
  8-pin plastic DFN (5mm x 6mm)
  RoHS compliant

Copyright 2023 FUJITSU SEMICONDUCTOR MEMORY SOLUTION LIMITED
2023.08

FUJITSU

■ PIN ASSIGNMENT

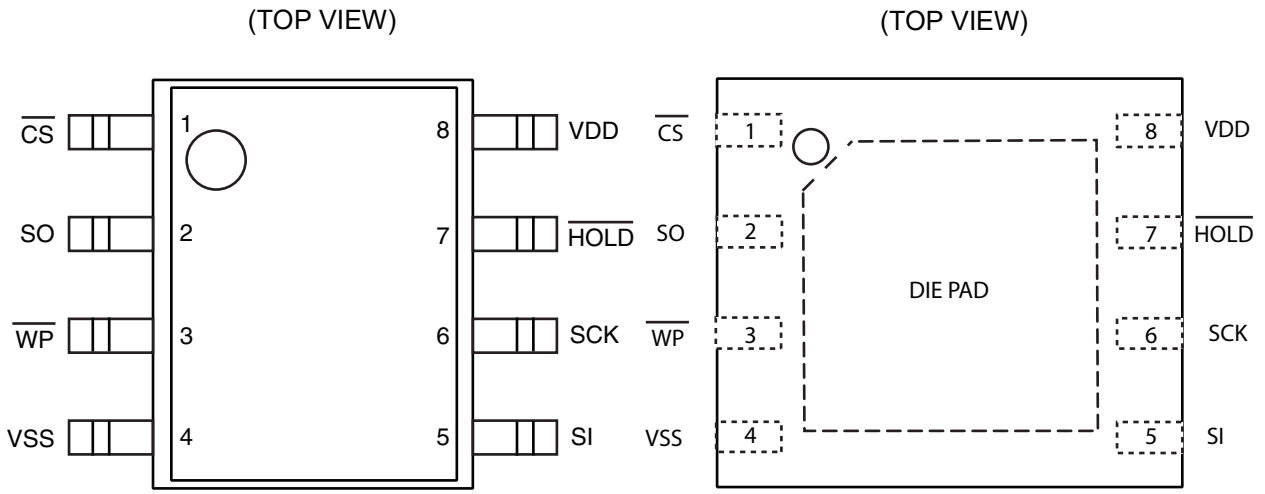

■ PIN FUNCTIONAL DESCRIPTIONS

Pin No.	Pin Name	Functional description
1	$\overline{CS}$	Chip Select pin This is an input pin to make chips select. When $\overline{CS}$ is “H” level, device is in deselect (standby) status and SO becomes High-Z. Inputs from other pins are ignored for this time. When $\overline{CS}$ is “L” level, device is in select (active) status. $\overline{CS}$ has to be “L” level before inputting op-code.
3	$\overline{WP}$	Write Protect pin This is a pin to control writing to a status register. The writing of status register (see “■ STATUS REGISTER”) is protected in related with $\overline{WP}$ and WPEN. See “ ■WRITING PROTECT” for detail.
7	$\overline{HOLD}$	Hold pin This pin is used to interrupt serial input/output without making chips deselect. When $\overline{HOLD}$ is “L” level, hold operation is activated, SO becomes High-Z, SCK and SI become do not care. See “ ■HOLD OPERATION” for detail. The Hold pin is pulled up internally to the VDD pin.
6	SCK	Serial Clock pin This is a clock input pin to input/output serial data. SI is loaded synchronously to a rising edge, SO is output synchronously to a falling edge.
5	SI	Serial Data Input pin This is an input pin of serial data. This inputs op-code, address, and writing data.
2	SO	Serial Data Output pin This is an output pin of serial data. Reading data of FeRAM memory cell array and status register data are output. This is High-Z during standby.
8	VDD	Supply Voltage pin
4	VSS	Ground pin

■ BLOCK DIAGRAM

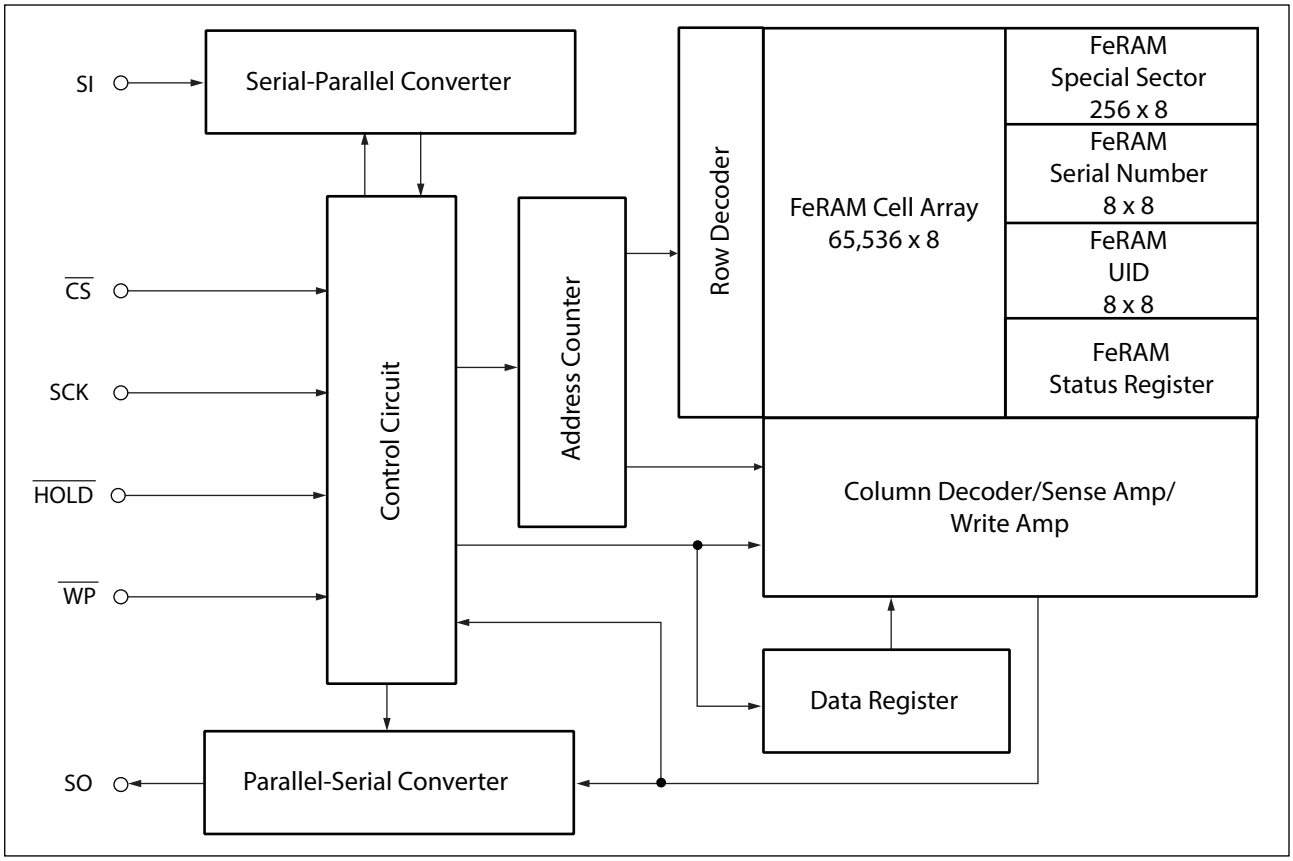

■ SPI MODE

MB85RS512LY corresponds to the SPI mode 0 (CPOL = 0, CPHA = 0) , and SPI mode 3 (CPOL = 1, CPHA = 1) .

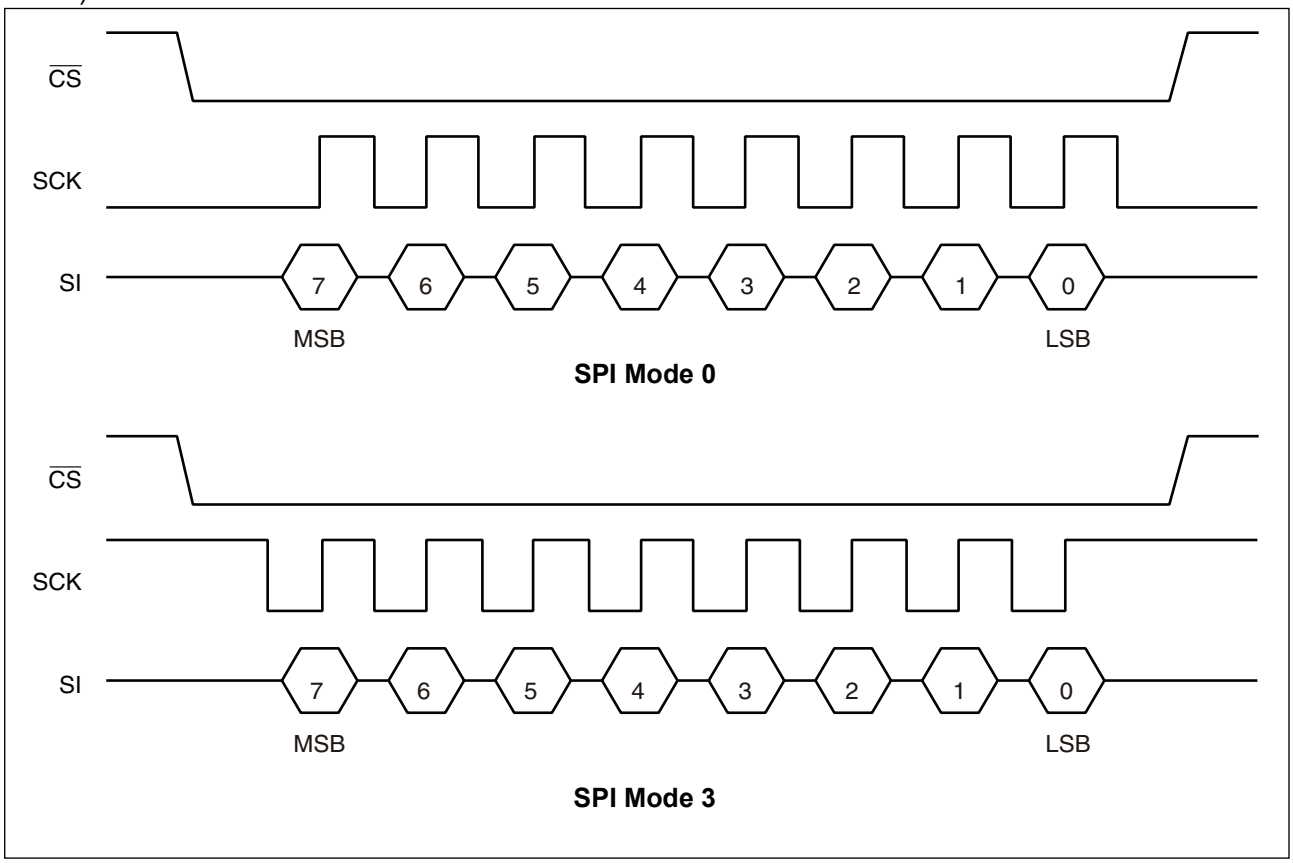

■ SERIAL PERIPHERAL INTERFACE (SPI)

MB85RS512LY works as a slave of SPI. More than 2 devices can be connected by using microcontroller equipped with SPI port. By using a microcontroller not equipped with SPI port, SI and SO can be bus connected to use.

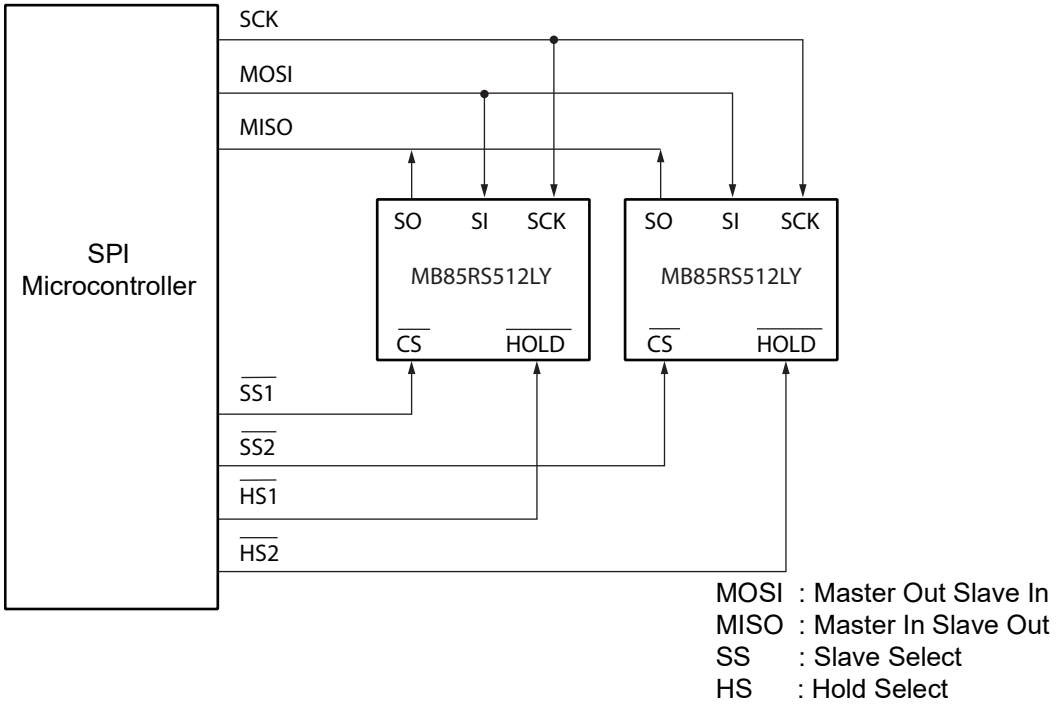

System Configuration with SPI Port

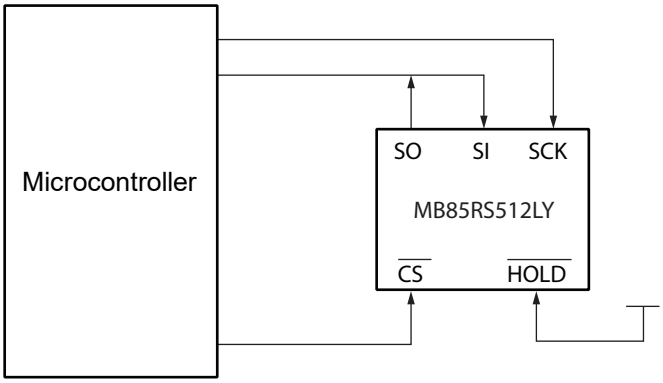

System Configuration without SPI Port

■ STATUS REGISTER

Bit No.	Bit Name	Function
7	WPEN	Status Register Write Protect This is a bit composed of nonvolatile memories (FeRAM). WPEN protects writing to a status register (refer to "■ WRITING PROTECT") relating with $\overline{WP}$ input. Writing with the WRSR command and reading with the RDSR command are possible.
6 to 4	—	Not Used Bits These are bits composed of nonvolatile memories, writing with the WRSR command is possible. These bits are not used but they are read with the RDSR command.
3	BP1	Block Protect This is a bit composed of nonvolatile memory. This defines size of write protect block for the WRITE command (refer to "■ BLOCK PROTECT"). Writing with the WRSR command and reading with the RDSR command are possible.
2	BP0	
1	WEL	Write Enable Latch This indicates FeRAM Array and status register are writable. The WREN command is for setting, and the WRDI command is for resetting. With the RDSR command, reading is possible but writing is not possible with the WRSR command. WEL is reset after the following operations. After power ON. After WRDI command recognition. Achieving continuous writing mode, WEL is not reset after following operations making it possible to execute writing commands continuously. After WRSR command recognition. After WRITE command recognition. After WRSN command recognition. After SSWR command recognition.
0	0	This is a bit fixed to "0".

■ OP-CODE

MB85RS512LY accepts 14 kinds of command specified in op-code. Op-code is a code composed of 8 bits shown in the table below. Do not input invalid codes other than those codes. If $\overline{CS}$ is risen while inputting op-code, the command are not performed.

Name	Description	Op-code
WREN	Set Write Enable Latch	$0000\ 0110_B$
WRDI	Reset Write Enable Latch	$0000\ 0100_B$
RDSR	Read Status Register	$0000\ 0101_B$
WRSR	Write Status Register	$0000\ 0001_B$
READ	Read Memory Code	$0000\ 0011_B$
WRITE	Write Memory Code	$0000\ 0010_B$
FSTRD	Fast Read Memory Code	$0000\ 1011_B$
RDID	Read Device ID	$1001\ 1111_B$
RUID	Read Unique ID	$0100\ 1100_B$
WRSN	Write Serial Number	$1100\ 0010_B$
RDSN	Read Serial Number	$1100\ 0011_B$
SSWR	Write Special Sector	$0100\ 0010_B$
SSRD	Read Special Sector	$0100\ 1011_B$
FSSRD	Fast Read Special Sector	$0100\ 1001_B$
RFU	Reserved	$1100\ 1110_B$
		$1100\ 1111_B$
		$1100\ 1100_B$

■ COMMAND

• WREN

The WREN command sets WEL (Write Enable Latch) bit to 1. WEL has to be set with the WREN command before writing operation (WRSR command, WRITE command, WRSN command and SSWR command) .

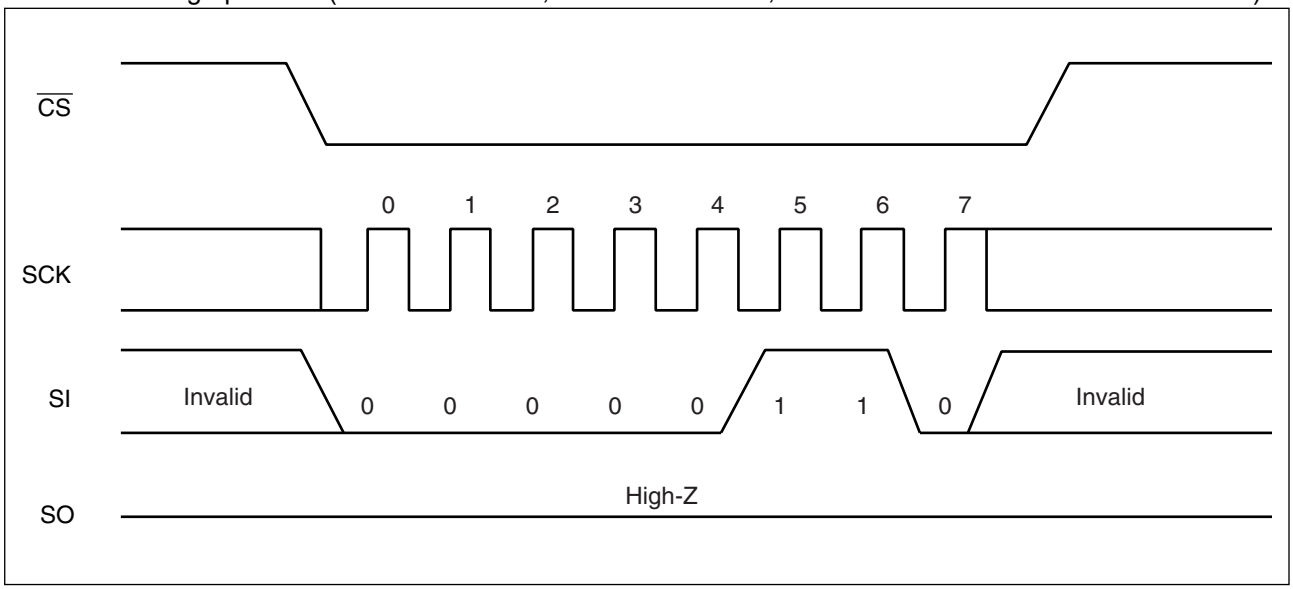

• WRDI

The WRDI command resets WEL (Write Enable Latch) bit to 0. Writing operation (WRSR command, WRITE command, WRSN command and SSWR command) are not performed when WEL is reset.

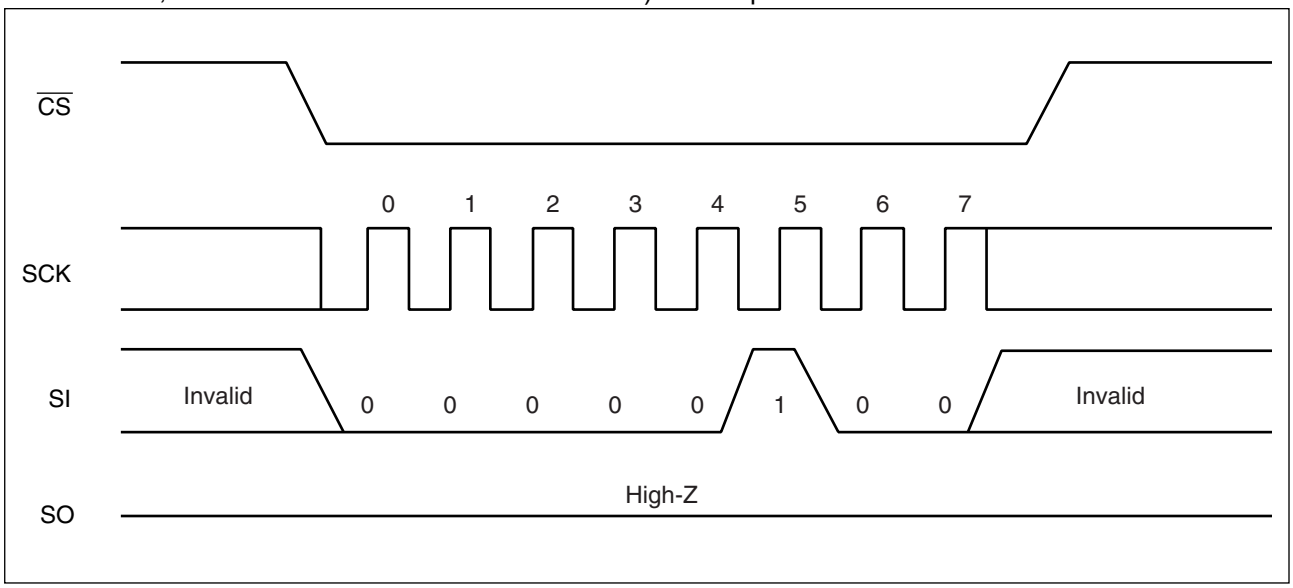

- **RDSR**

The RDSR command reads status register data. After op-code of RDSR is input to SI, 8-cycle clock is input to SCK. The SI value is invalid for this time. SO is output synchronously to a falling edge of SCK. In the RDSR command, repeated reading of status register is enabled by sending SCK continuously before rising of $\overline{CS}$.

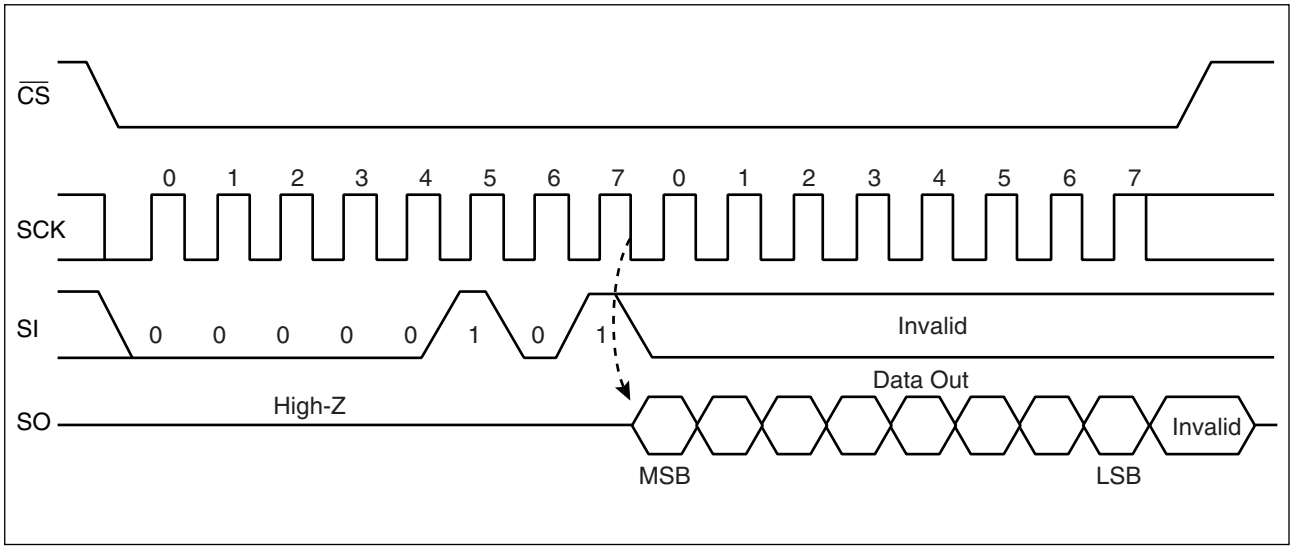

- **WRSR**

The WRSR command writes data to the nonvolatile memory bit of status register. After performing WRSR op-code to a SI pin, 8 bits writing data is input. WEL (Write Enable Latch) is not able to be written with WRSR command. A SI value correspondent to bit 1 is ignored. Bit 0 of the status register is fixed to “0” and cannot be written. The SI value corresponding to bit 0 is ignored. $\overline{WP}$ signal level shall be fixed before performing WRSR command, and do not change the $\overline{WP}$ signal level until the end of command sequence.

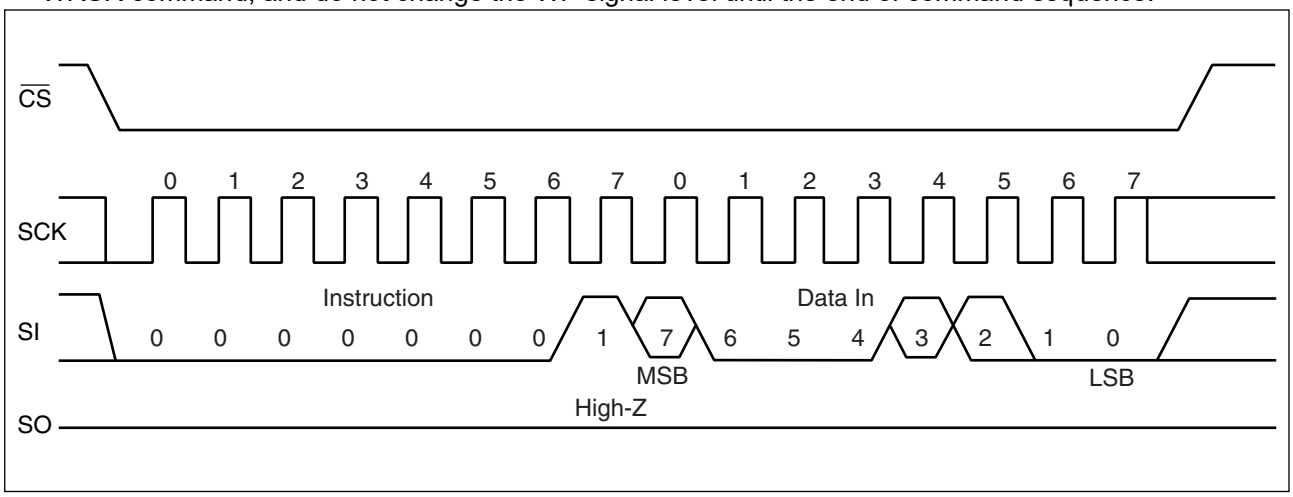

- **READ**

The READ command reads FeRAM memory cell array data. Arbitrary 16 bits address and op-code of READ are input to SI. Then, 8-cycle clock is input to SCK. SO is output synchronously to the falling edge of SCK. While reading, the SI value is invalid. When $\overline{CS}$ is risen, the READ command is completed, but keeps on reading with automatic address increment which is enabled by continuously sending clocks to SCK in unit of 8 cycles before $\overline{CS}$ rising. When it reaches the most significant address, it rolls over to the starting address, and reading cycle keeps on infinitely.

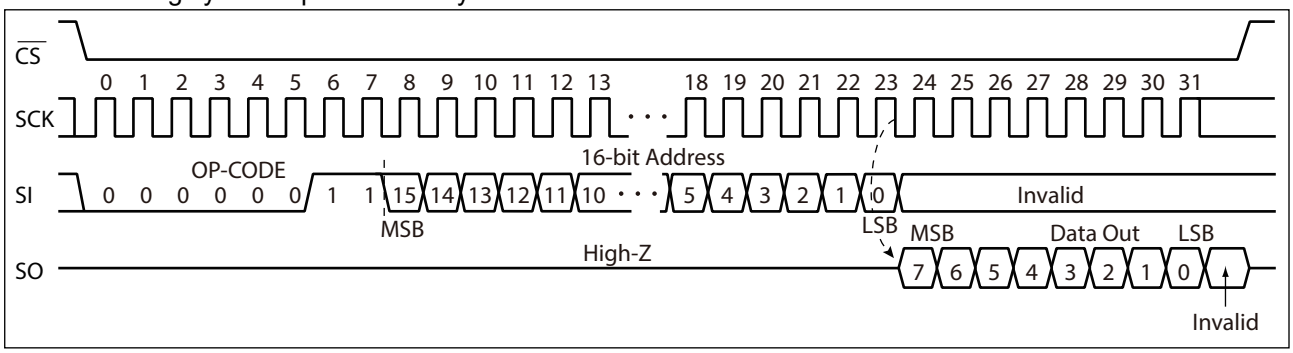

- **WRITE**

The WRITE command writes data to FeRAM memory cell array. WRITE op-code, arbitrary 16 bits of address and 8 bits of writing data are input to SI. When 8 bits of writing data is input, data is written to FeRAM memory cell array. Risen $\overline{CS}$ will terminate the WRITE command, but if you continue sending the writing data for 8 bits each before $\overline{CS}$ rising, it is possible to continue writing with automatic address increment. When it reaches the most significant address, it rolls over to the starting address, and writing cycle can be continued infinitely.

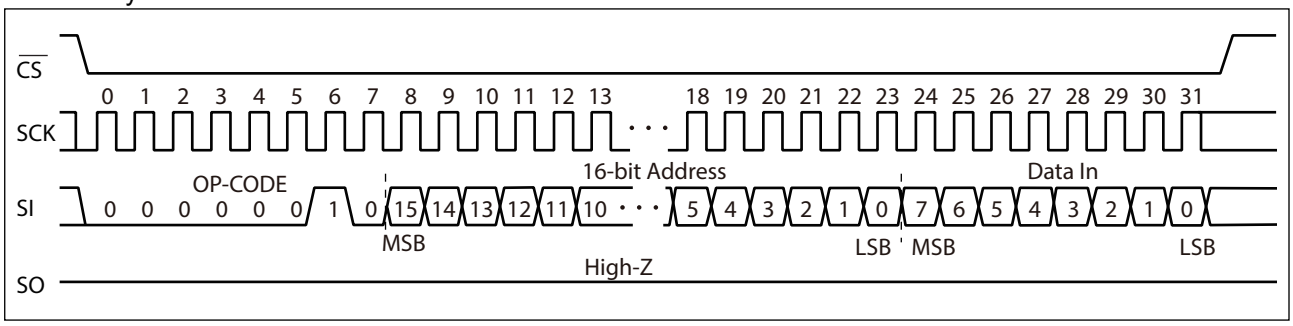

- **FSTRD**

The FSTRD command reads FeRAM memory cell array data. Arbitrary 16bits address and op-code of FSTRD are input to SI followed by 8 bits dummy. Then, 8-cycle clock is input to SCK. SO is output synchronously to the falling edge of SCK. While reading, the SI value is invalid. When $\overline{CS}$ is risen, the FSTRD command is completed, but keeps on reading with automatic address increment which is enabled by continuously sending clocks to SCK in unit of 8 cycles before $\overline{CS}$ rising. When it reaches the most significant address, it rolls over to the starting address, and reading cycle keeps on infinitely.

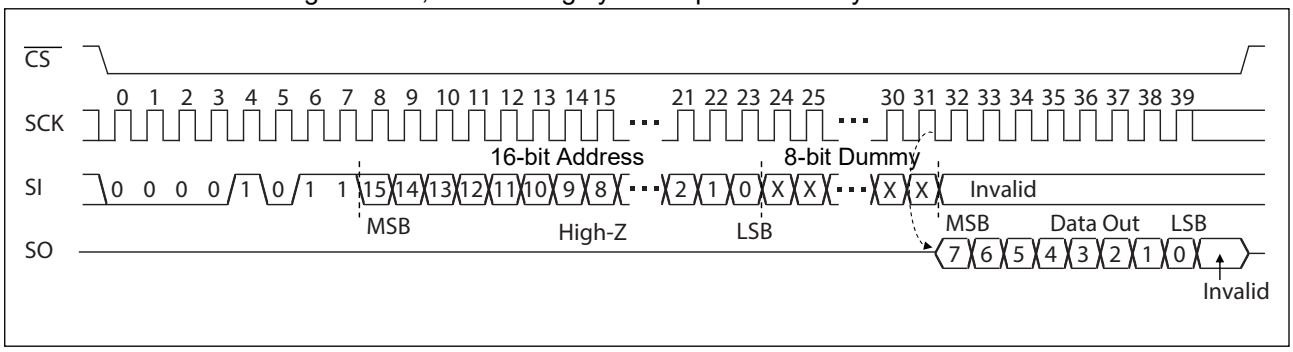

- **RDID**

The RDID command reads fixed Device ID. After performing RDID op-code to SI, 32-cycle clock is input to SCK. The SI value is invalid for this time. SO is output synchronously to a falling edge of SCK. The output is in order of Manufacturer ID (8bit)/Continuation code (8bit)/Product ID (1st Byte)/Product ID (2nd Byte). In the RDID command, 32-bit Device ID is output by continuously sending SCK clock, and SO holds the output state of the last bit until $\overline{CS}$ is risen.

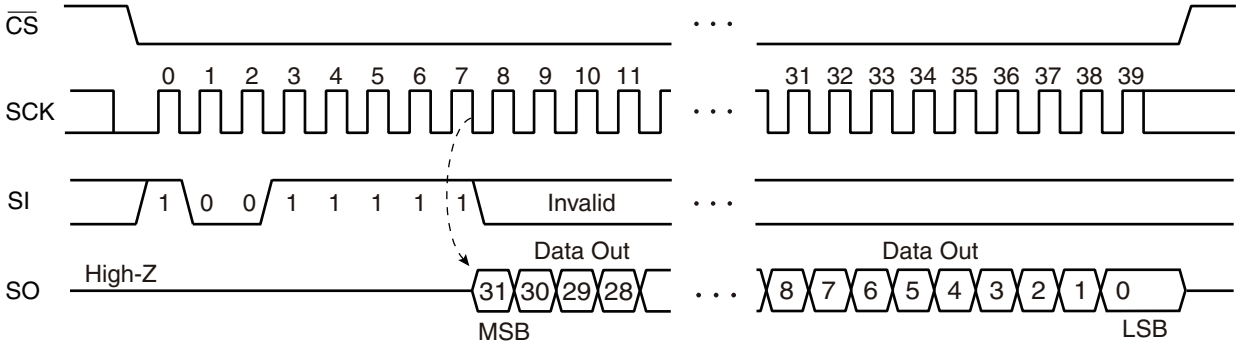

	bit									
	7	**6**	**5**	**4**	**3**	**2**	**1**	**0**	**Hex**	
Manufacturer ID	0	0	0	0	0	1	0	0	04_H	Fujitsu
Continuation code	0	1	1	1	1	1	1	1	$7F_H$	

	Proprietary use			Density					Hex	
Product ID (1st Byte)	0	1	0	0	0	1	1	0	46_H	Density: 00110_B = 512Kbit

	Proprietary use								Hex
Product ID (2nd Byte)	0	0	0	0	0	1	0	1	05_H

- RUID

The RUID command reads an unique ID which is defined in 64bits for each device. After performing RUID op-code to SI, 64-cycle clock is input to SCK. The SI value is invalid for this time. SO is output synchronously to a falling edge of SCK.
The unique ID is stable between before and after reflow. Refer "■ REFLOW CONDITIONS AND FLOOR LIFE" for the reflow condition.

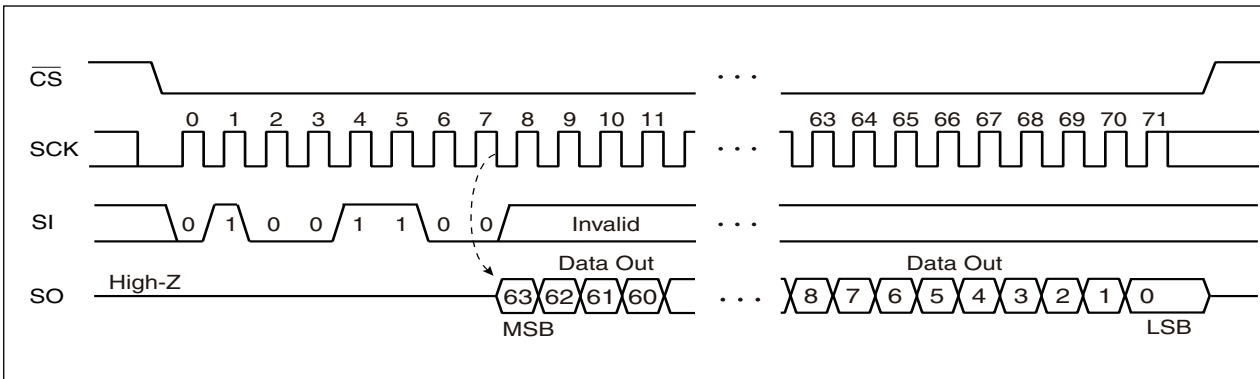

•WRSN

The WRSN command writes data to serial number region which is allowed to write only one time. After performing WRSN op-code to SI, 64bits of writing data is input. Once wrote, the serial number region is protected, disabling to overwrite even when issuing WRSN command.
$\overline{WP}$ signal level shall be fixed before performing WRSN command, and do not change the $\overline{WP}$ signal level until the end of command sequence.

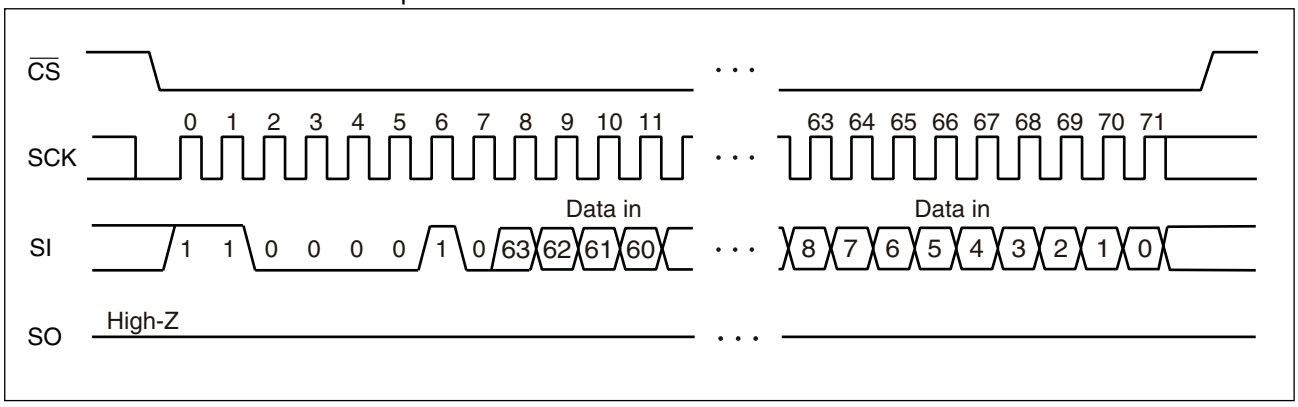

•RDSN

The RDSN command reads 64 bits of serial number which is written using WRSN command. After performing RDSN op-code to SI, 64-cycle clock to SCK. The SI value is invalid for this time. SO is output synchronously to a falling edge of SCK. When reading serial number from devices which no WRSN command is executed, “0” for all bits are output.

The serial number is stable between before and after reflow. Refer “■ REFLOW CONDITIONS AND FLOOR LIFE” for the reflow condition.

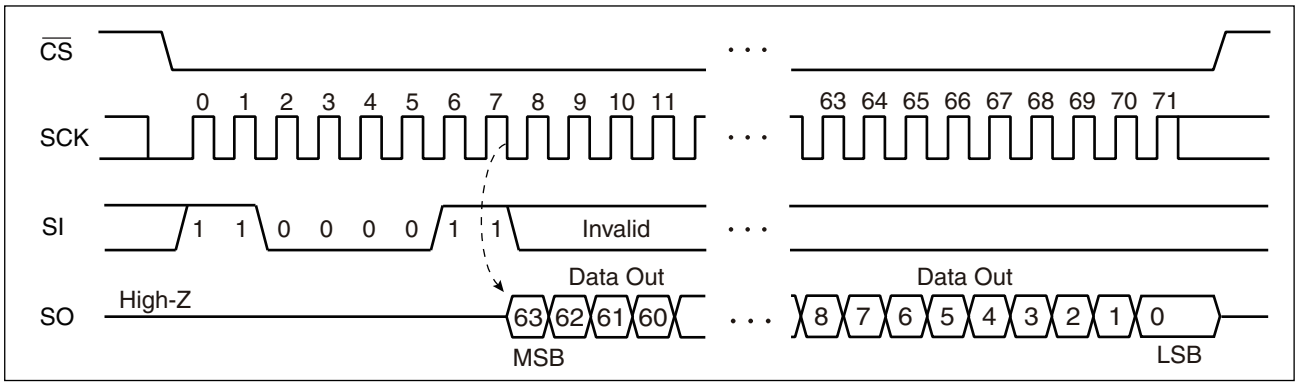

- SSWR

The SSWR command writes data to special sector (a special region of 256 Byte in FeRAM). SSWR op-code, arbitrary 16 bits address and 8-bit writing data are input to SI. The 8-bit upper address is invalid. When input of 8-bit writing data is completed, it starts writing data to special sector. Risen $\overline{CS}$ will terminate the SSWR command, but if you continue the writing data for each before $\overline{CS}$ rising, it is possible to continue writing with automatic address increment. When it reaches the most significant address, roll over is not happen, the data hereafter is ignored.

The data in special sector is stable between before and after reflow. Refer "■ REFLOW CONDITIONS AND FLOOR LIFE" for the reflow condition.

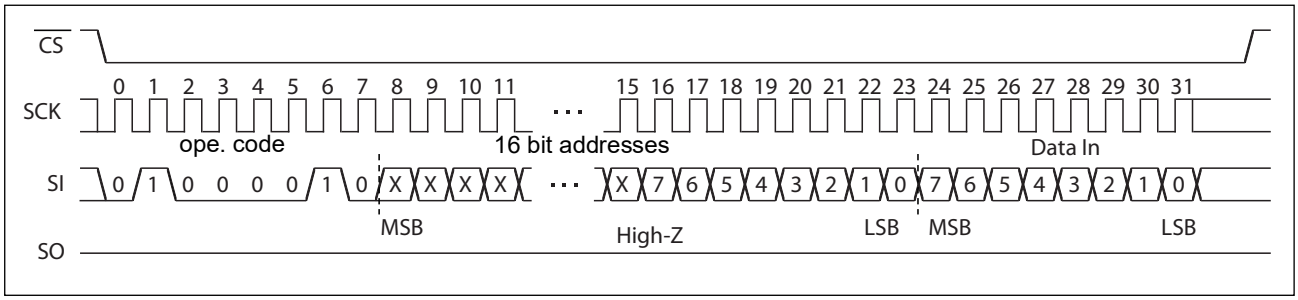

- SSRD

The SSRD command reads data from special sector (a special region of 256 Byte in FeRAM). SSWR op-code and arbitrary 16 bits address are input to SI. The 8-bit upper address is invalid. Then, 8-cycle clock is input to SCK. SO is output synchronously to the falling edge of SCK. While reading, the SI value is invalid. When $\overline{CS}$ is risen, the SSRD command is completed, but keeps on reading with automatic address increment which is enabled by continuously sending clocks to SCK in unit of 8 cycles before $\overline{CS}$ rising. When it reaches the most significant address, roll over is not happen.

The data in special sector is stable between before and after reflow. Refer "■ REFLOW CONDITIONS AND FLOOR LIFE" for the reflow condition.

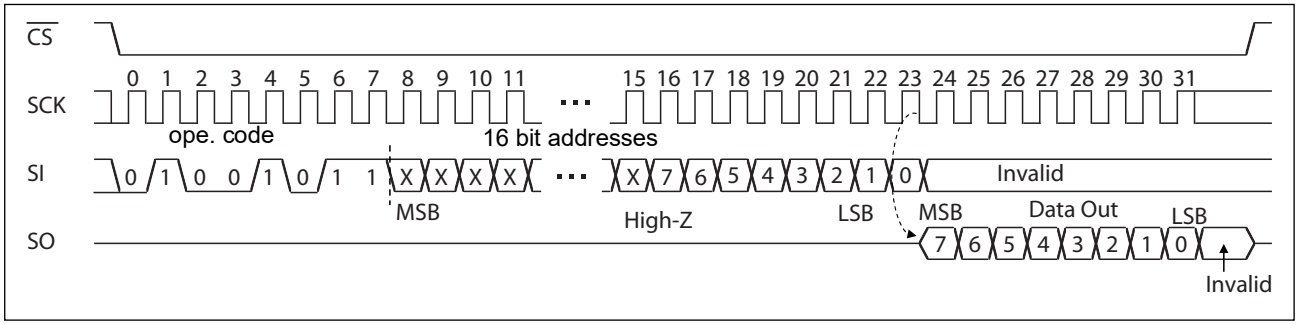

- FSSRD

The SSRD command reads data from special sector (a special region of 256 Byte in FeRAM). SSWR op-code and arbitrary 16 bits address are input to SI followed by 8 bits dummy. The 8-bit upper address is invalid. Then, 8-cycle clock is input to SCK. SO is output synchronously to the falling edge of SCK. While reading, the SI value is invalid. When $\overline{CS}$ is risen, the SSRD command is completed, but keeps on reading with automatic address increment which is enabled by continuously sending clocks to SCK in unit of 8 cycles before $\overline{CS}$ rising. When it reaches the most significant address, roll over is not happen.

The data in special sector is stable between before and after reflow. Refer "■ REFLOW CONDITIONS AND FLOOR LIFE" for the reflow condition.

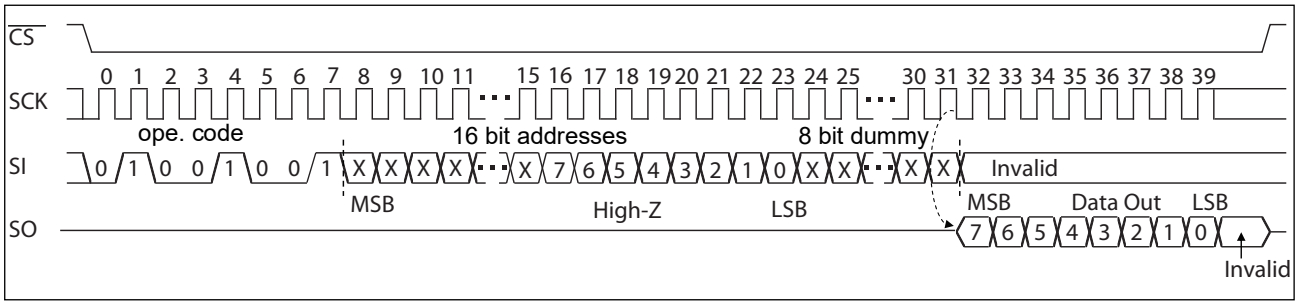

■ BLOCK PROTECT

Writing protect block for WRITE command is configured by the value of BP0 and BP1 in the status register.

BP1	BP0	Protected Block
0	0	None
0	1	$C000_H$ to $FFFF_H$ (upper 1/4)
1	0	8000_H to $FFFF_H$ (upper 1/2)
1	1	0000_H to $FFFF_H$ (all)

■ WRITING PROTECT

Writing operation of the WRITE command and the WRSR command are protected with the value of WEL, WPEN, $\overline{WP}$ as shown in the table.

WEL	WPEN	$\overline{WP}$	Protected Blocks	Unprotected Blocks	Status Register
0	X	X	Protected	Protected	Protected
1	0	X	Protected	Unprotected	Unprotected
1	1	0	Protected	Unprotected	Protected
1	1	1	Protected	Unprotected	Unprotected

■ HOLD OPERATION

Hold status is retained without aborting a command if $\overline{HOLD}$ is “L” level while $\overline{CS}$ is “L” level. The timing for starting and ending hold status depends on the SCK to be “H” level or “L” level when a $\overline{HOLD}$ pin input is transited to the hold condition as shown in the diagram below. In case the $\overline{HOLD}$ pin transited to “L” level when SCK is “L” level, return the $\overline{HOLD}$ pin to “H” level at SCK being “L” level. In the same manner, in case the $\overline{HOLD}$ pin transited to “L” level when SCK is “H” level, return the $\overline{HOLD}$ pin to “H” level at SCK being “H” level. Arbitrary command operation is interrupted in hold status, SCK and SI inputs become do not care. And, SO becomes High-Z while reading command (RDSR, READ). If $\overline{CS}$ is rising during hold status, a command is aborted. In case the command is aborted before its recognition, WEL holds the value before transition to hold status.

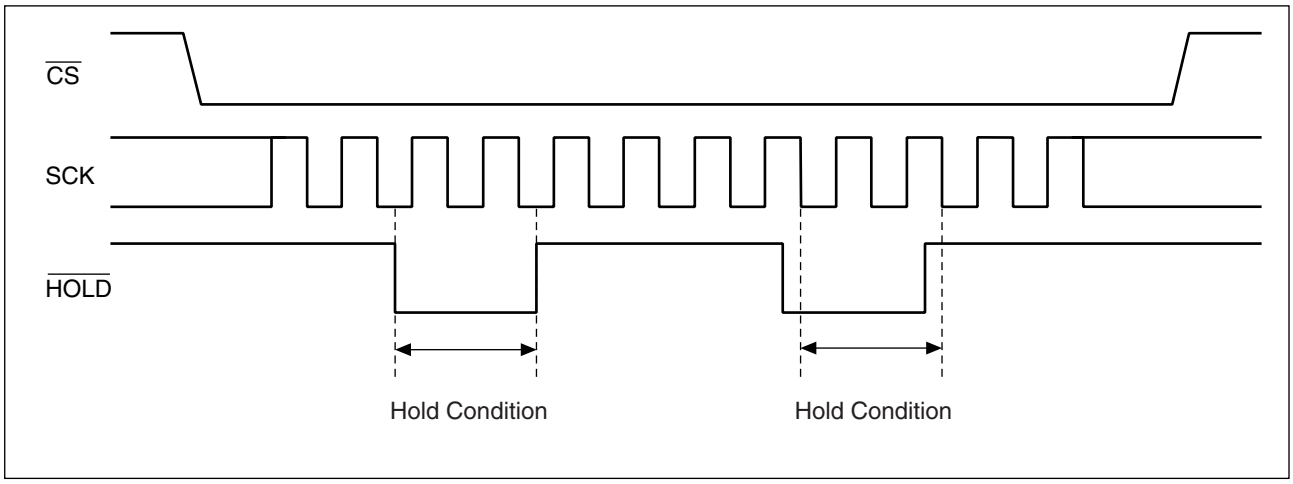

■ ABSOLUTE MAXIMUM RATINGS

Parameter	Symbol	Rating		Unit
		Min	Max	
Power supply voltage*	V_{DD}	− 0.5	+ 2.5	V
Input voltage*	V_{IN}	− 0.5	V_{DD} + 0.5	V
Output voltage*	V_{OUT}	− 0.5	V_{DD} + 0.5	V
Operation ambient temperature	T_A	− 40	+ 125	°C
Storage temperature	Tstg	− 55	+ 150	°C

*: These parameters are based on the condition that V_{SS} is 0 V.

WARNING: Semiconductor devices may be permanently damaged by application of stress (including, without limitation, voltage, current or temperature) in excess of absolute maximum ratings. Do not exceed any of these ratings.

■ RECOMMENDED OPERATING CONDITIONS

Parameter	Symbol	Value			Unit
		Min	Typ	Max	
Power supply voltage*1	V_{DD}	1.70	1.80	1.95	V
Operation ambient temperature*2	T_A	− 40	—	+ 125	°C

*1: These parameters are based on the condition that V_{SS} is 0 V.

*2: Ambient temperature when only this device is working. Please consider it to be the almost same as the package surface temperature.

WARNING: The recommended operating conditions are required in order to ensure the normal operation of the semiconductor device. All of the device's electrical characteristics are warranted when the device is operated under these conditions.

Any use of semiconductor devices will be under their recommended operating condition. Operation under any conditions other than these conditions may adversely affect reliability of device and could result in device failure.

No warranty is made with respect to any use, operating conditions or combinations not represented on this data sheet. If you are considering application under any conditions other than listed herein, please contact sales representatives beforehand.

■ ELECTRICAL CHARACTERISTICS

1. DC Characteristics

(within recommended operating conditions)

Parameter	Symbol	Condition		Value Min	Value Typ (T_A=25 °C)	Value Max	Unit
Input leakage current*1	$\|I_{LI}\|$	$\overline{CS}$ = V_{DD}	25 °C	—	—	1	μA
			125 °C	—	—	2	
		$\overline{WP}$, SCK,$\overline{CS}$ SI = 0 V to V_{DD}	25 °C	—	—	1	
			125 °C	—	—	2	
		HOLD = 0 V to V_{DD}	25 °C	—	—	100	
			125 °C	—	—	100	
Output leakage current*2	$\|I_{LO}\|$	SO = 0 V to V_{DD}	25 °C	—	—	1	μA
			125 °C	—	—	2	
Operating power supply current*3	I_{DD}	SCK = 50MHz		—	TBD.	3.0	mA
Standby current	I_{SB}	SCK = SI = $\overline{CS}$ = $\overline{WP}$ = V_{DD}		—	TBD.	150	μA
Input high voltage	V_{IH}	V_{DD} = 1.7 V to 1.95 V		V_{DD} × 0.8	—	V_{DD} + 0.5	V
Input low voltage	V_{IL}	V_{DD} = 1.7 V to 1.95 V		− 0.5	—	V_{DD} × 0.2	V
Output high voltage	V_{OH}	I_{OH} = − 2 mA		V_{DD} − 0.5	—	—	V
Output low voltage	V_{OL}	I_{OL} = 2 mA		—	—	0.4	V
Pull up resistance for $\overline{HOLD}$	R_P	—		36	66	230	kΩ

*1 : Applicable pin : $\overline{CS}$, $\overline{WP}$, SCK, SI

*2 : Applicable pin : SO

*3 : Input voltage magnitude : VDD − 0.2 V or VSS

2. AC Characteristics

Parameter	Symbol	Value		Unit	Condition
		Min	Max		V_{DD}
SCK clock frequency	f_{CK}	—	50	MHz	all commands except for READ/ SSRD
		—	40		READ command
		—	10		SSRD command
Clock high time	t_{CH}	9	—	ns	
Clock low time	t_{CL}	9	—	ns	
Chip select set up time	t_{CSU}	5	—	ns	
Chip select hold time	t_{CSH}	5	—	ns	
Output disable time	t_{OD}	—	10	ns	
Output data valid time	t_{ODV}	—	9	ns	*1
Output hold time	t_{OH}	0	—	ns	
Deselect time	t_D	40	—	ns	
Data in rising time	t_R	—	50	ns	
Data falling time	t_F	—	50	ns	
Data set up time	t_{SU}	5	—	ns	
Data hold time	t_H	5	—	ns	
$\overline{HOLD}$ set uptime	t_{HS}	10	—	ns	—
$\overline{HOLD}$ hold time	t_{HH}	10	—	ns	—
$\overline{HOLD}$ output floating time	t_{HZ}	—	20	ns	—
$\overline{HOLD}$ output active time	t_{LZ}	—	20	ns	—

*1: In SSRD command, 60ns(max.)

AC Test Condition

Power supply voltage : 1.7 V to 1.95 V Operation
Operation ambient temperature : − 40 °C to + 125 °C
Input voltage magnitude : $V_{DD} \times 0.8 \leq V_{IH} \leq V_{DD}$
$0 \leq V_{IL} \leq V_{DD} \times 0.2$
Input rising time : 5 ns
Input falling time : 5 ns
Input judge level : $V_{DD}/2$
Output judge level : $V_{DD}/2$

AC Load Equivalent Circuit

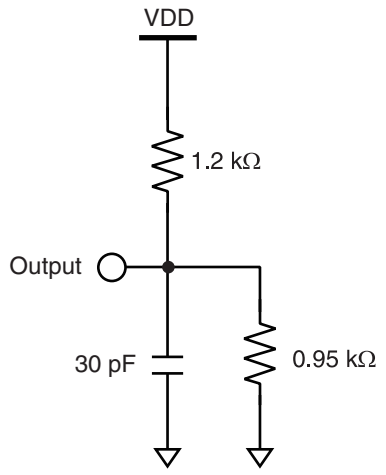

3. Pin Capacitance

Parameter	Symbol	Condition	Value		Unit
			Min	Max	
Output capacitance	C_O	V_{DD} = 1.8 V, V_{IN} = V_{OUT} = 0 V to V_{DD}, f = 1 MHz, T_A = +25 °C	—	8	pF
Input capacitance	C_I		—	6	pF

■ TIMING DIAGRAM

• **Serial Data Timing**

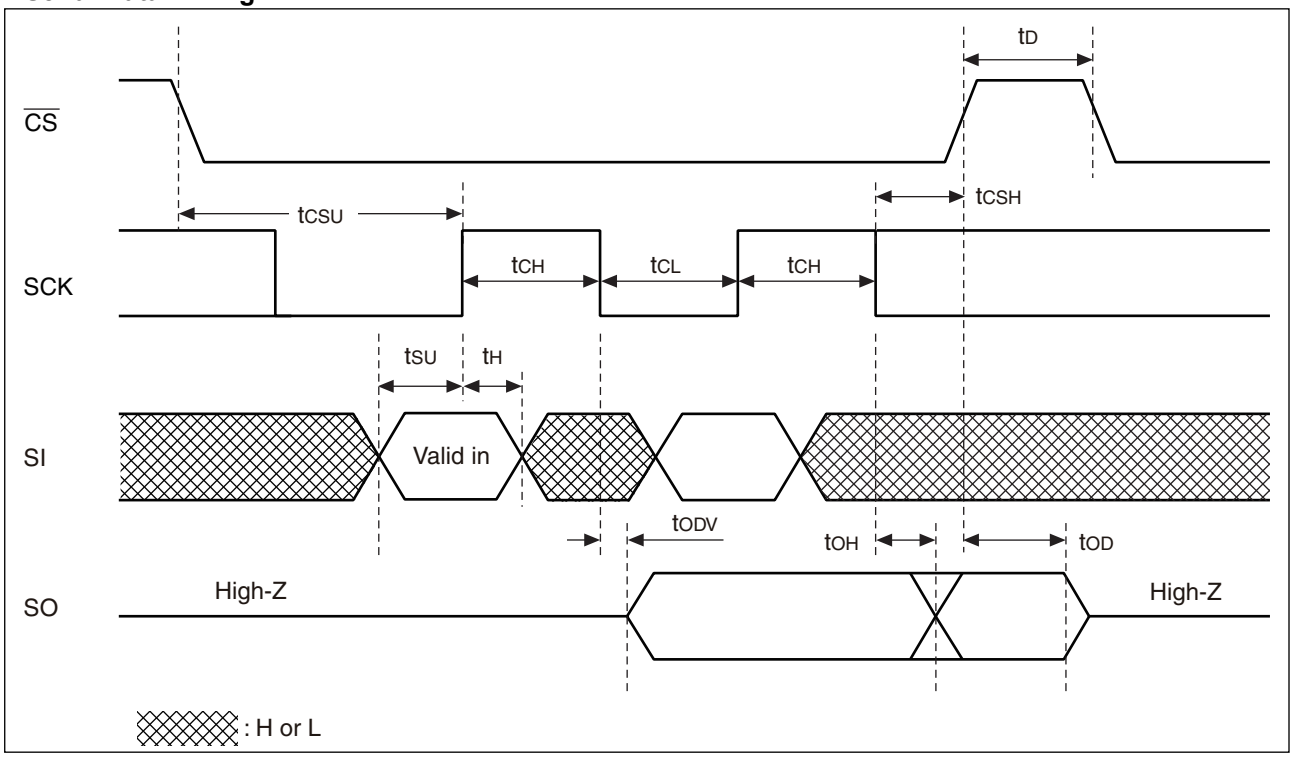

• **Hold Timing**

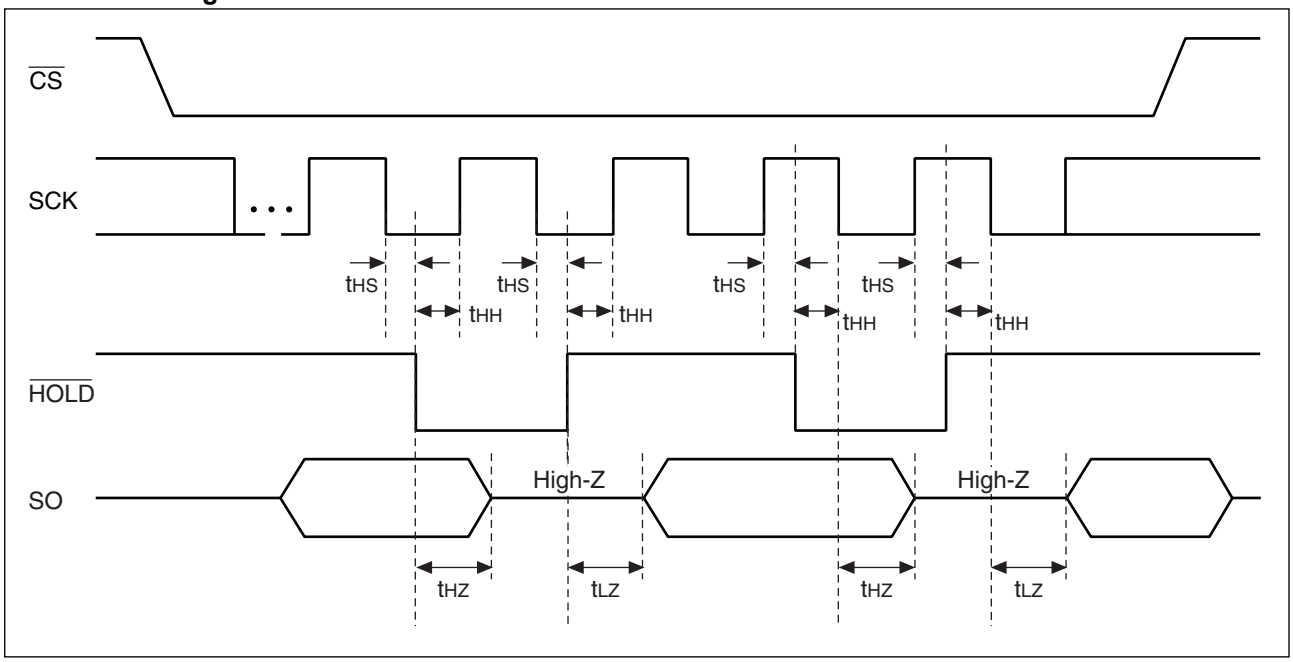

■ POWER ON/OFF SEQUENCE

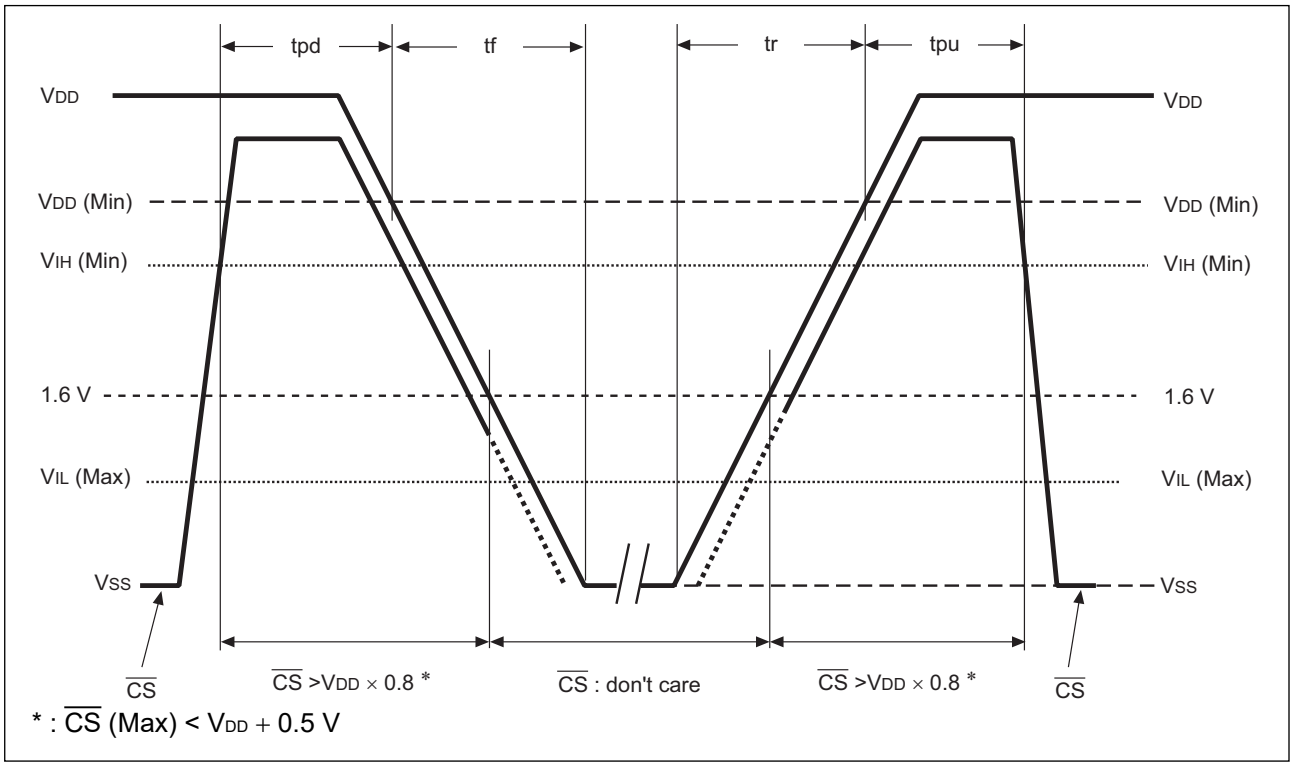

In case relative short V_{DD} pulse whose peak level is beyond 1.6 is applied, please set V_{DD} falling time, tf, longer than 0.4ms/V. (When V_{DD} rises beyond 1.6V, and falls just after, if this term is very short the device may loose its function.).

Parameter	Symbol	Value		Unit
		Min	Max	
$\overline{CS}$ level hold time at power OFF	tpd	400	—	ns
$\overline{CS}$ level hold time at power ON	tpu	450	—	µs
Power supply rising time	tr	0.05	—	ms/V
Power supply falling time	tf	0.1	—	ms/V

If the device does not operate within the specified conditions of read cycle, write cycle or power on/off sequence, memory data can not be guaranteed.

■ FeRAM CHARACTERISTICS

Parameter	Value		Unit	Remarks
	Min	Max		
Read/Write Endurance*1	10^{13}	—	Times/byte	Operation Ambient Temperature T_A = + 125 °C
Data Retention*2	5.9 or more*3	—	Years	Operation Ambient Temperature T_A = + 125 °C
	19.1	—		Operation Ambient Temperature T_A = + 105 °C
	70.4	—		Operation Ambient Temperature T_A = + 85 °C

*1 : Total number of reading and writing defines the minimum value of endurance, as an FeRAM memory operates with destructive readout mechanism.

*2: Minimum values define retention time of the first reading/writing data right after shipment, and these values are calculated by qualification results.

*3: Under evaluation for more than 5.9 years(+125 °C).

■ NOTE ON USE

We recommend programming of the device after reflow except for special sector region and serial number region. Data written before reflow cannot be guaranteed.

■ ESD AND LATCH-UP

Test	DUT	Value
ESD HBM (Human Body Model) JESD22-A114 compliant	MB85RS512LYPNF-GS-BCE1 MB85RS512LYPNF-GS-BCERE1 MB85RS512LYPN-GS-AWE1 MB85RS512LYPN-GS-AWEWE1	≥ |2000 V|
ESD CDM (Charged Device Model) AEC-Q100-011(FI-CDM) compliant		≥ |1000 V|
Latch-Up (I-test) JESD78 compliant		≥ |125mA|
Latch-Up (V_{supply} overvoltage test) JESD78 compliant		≥ 5.4V

■ REFLOW CONDITIONS AND FLOOR LIFE

[JEDEC MSL] : Moisture Sensitivity Level 3 (IPC/JEDEC J-STD-020E)

■ Current status on Contained Restricted Substances

This product complies with the regulations of REACH Regulations, EU RoHS Directive and China RoHS.

■ ORDERING INFORMATION :

Part number	Package	Shipping form	Minimum shipping quantity
MB85RS512LYPNF-GS-BCE1	8-pin plastic SOP	Tube	— *
MB85RS512LYPNF-GS-BCERE1	8-pin plastic SOP	Embossed Carrier tape	1500
MB85RS512LYPN-GS-AWE1	8-pin plastic DFN	Tray	— *
MB85RS512LYPN-GS-AWEWE1	8-pin plastic DFN	Embossed Carrier tape	1500

* : Please contact our sales office about minimum shipping quantity.

■ PACKAGE DIMENSION

(1) MB85RS512LYPNF-GS-BCE1/MB85RS512LYPNF-GS-BCERE1

8-pin plastic SOP

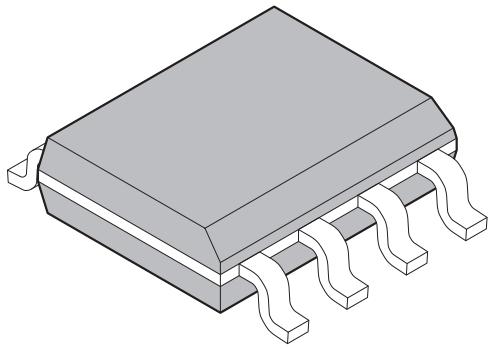

MB85RS512LYPNF-GS-BCE1
MB85RS512LYPNF-GS-BCERE1

Lead pitch	1.27mm
Package width x Package length	3.90mm x 4.90mm
Lead shape	Gullwing
Sealing method	Plastic mold
Mounting height	1.75mm MAX.

8-pin plastic SOP

Note *: These dimension do not include resin protrution.
Pins width do not include tie bar cutting remaindar.

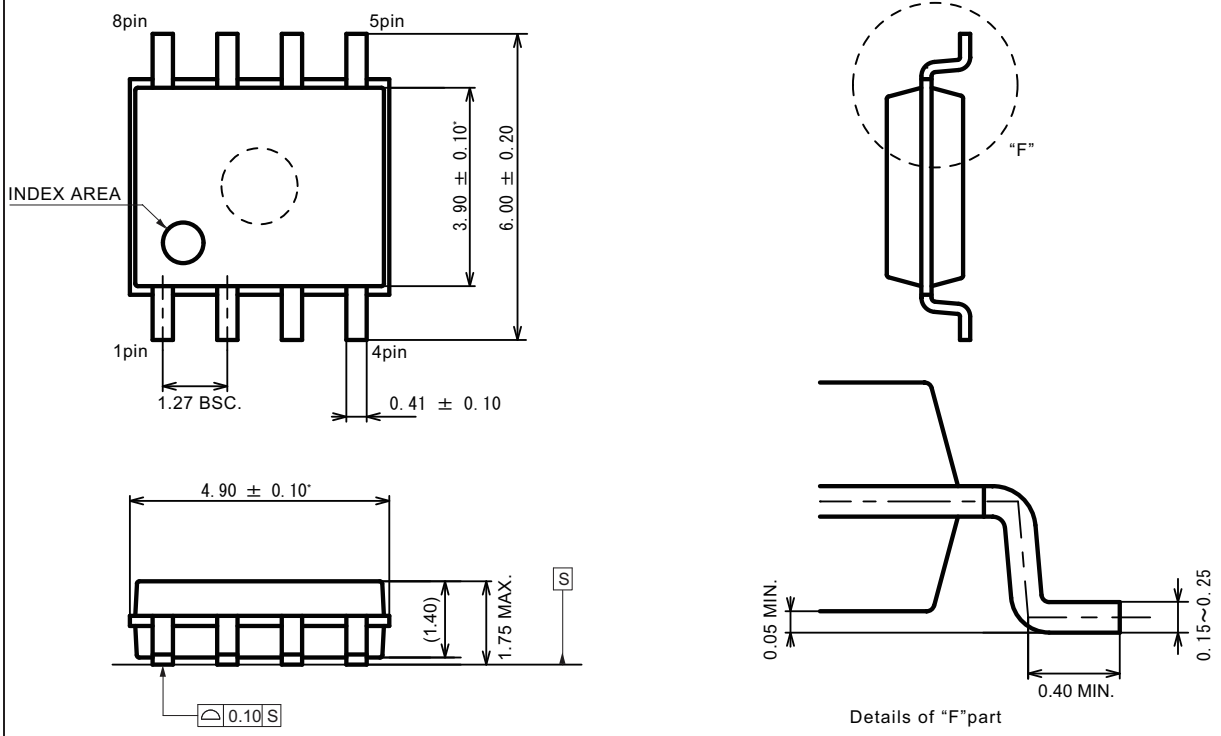

Dimension in mm

(2) MB85RS512LYPN-GS-AWE1/MB85RS512LYPN-GS-AWEWE1

8-pin plastic DFN		
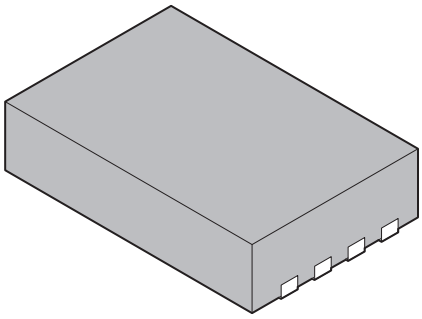	Lead pitch	1.27 mm
	Package width x Package length	5.00 mm × 6.00 mm
	Sealing method	Plastic mold
	Mounting height	0.90 mm MAX
MB85RS512LYPN-GS-AWE1 MB85RS512LYPN-GS-AWEWE1		

8-pin plastic DFN

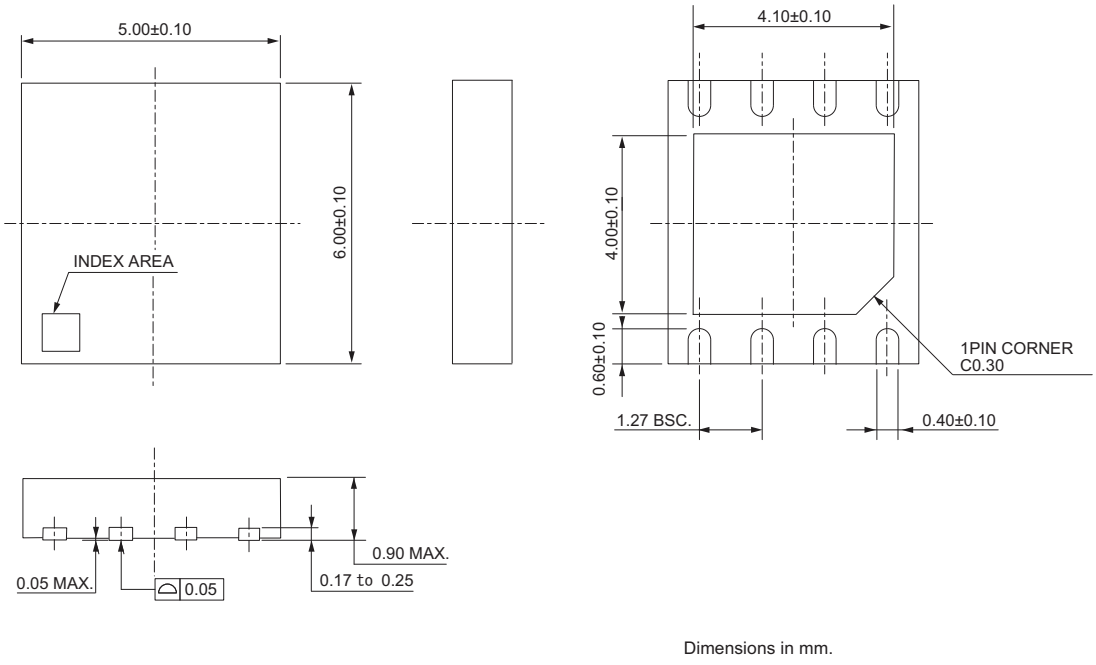

Dimensions in mm.

■ MARKING (Example)

(1) MB85RS512LYPNF-GS-BCE1/MB85RS512LYPNF-GS-BCERE1

[MB85RS512LYPNF-GS-BCE1]
[MB85RS512LYPNF-GS-BCERE1]

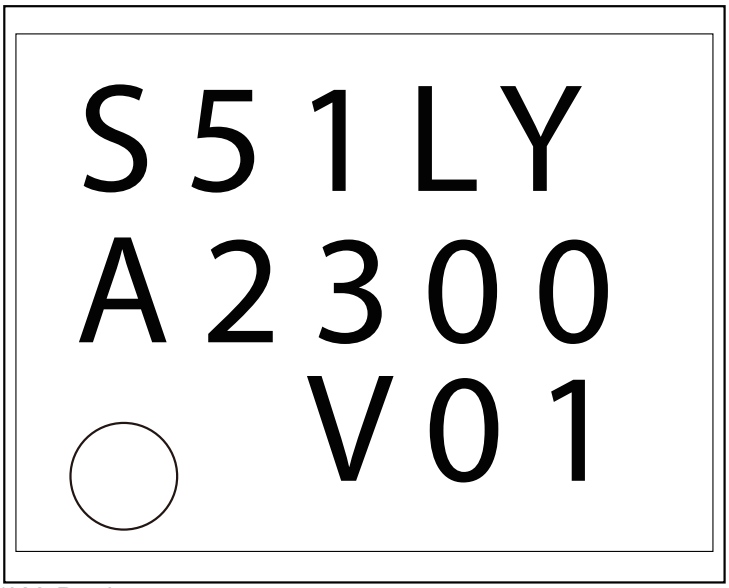

S51LY: Product name
A2300 : A(CS code) + 2300(Year and Week code)
V01 : Trace code

(2) MB85RS512LYPN-GS-AWE1/MB85RS512LYPN-GS-AWEWE1

[MB85RS512LYPN-GS-AWE1]
[MB85RS512LYPN-GS-AWEWE1]

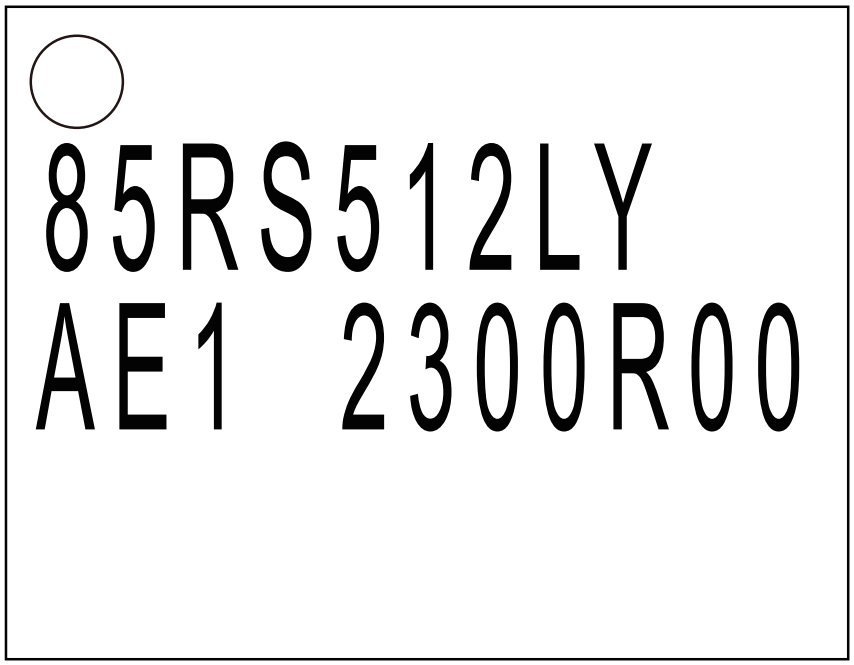

85RS512LY: Product name
AE1 : A(CS code) + E1(Environmental code)
2300R00 : 2300(Year and Week code) + R00(Trace code)

■ PACKING INFORMATION

(1) MB85RS512LYPNF-GS-BCE1/MB85RS512LYPNF-GS-BCERE1

1. Tube (MB85RS512LYPNF-GS-BCE1)

1.1 Tube Dimensions

- Tube/stopper shape (example)

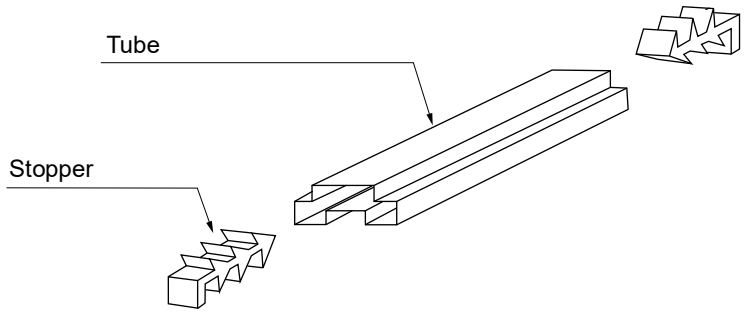

- **Tube cross-sections** and Maximum quantity

Maximum quantity		
pcs/tube(500mm)	pcs/inner box	pcs/outer box
85	4,250	17,000

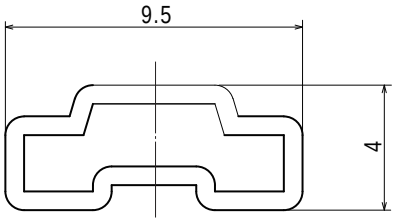

No heat resistance.
Package should not be baked by using tube.

(Dimensions in mm)

- **Direction of index in tube**

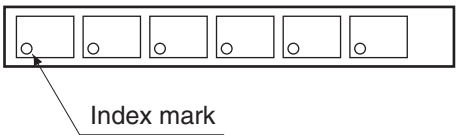

1.2 Product label indicators (example)

Label I: Label on Inner box/Moisture Barrier Bag/ (It sticks it on the reel for the emboss taping)
[C-3 Label (50mm × 100mm) Supplemental Label (20mm × 100mm)]

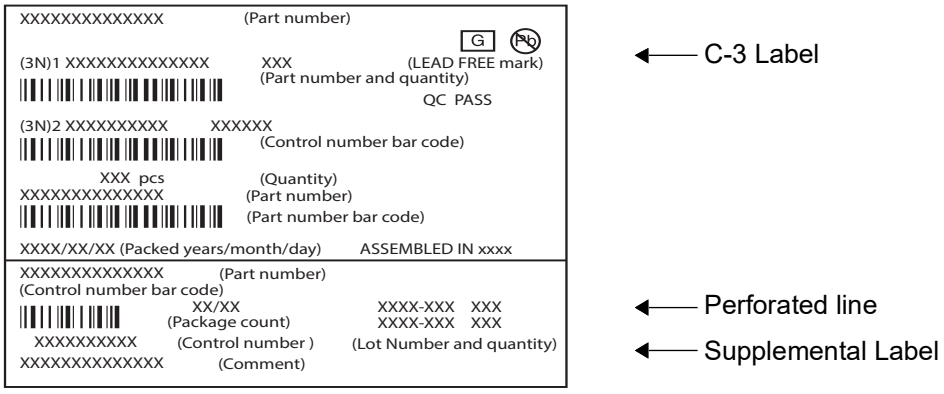

1.3 Dimensions for Containers

(1) Dimensions for inner box

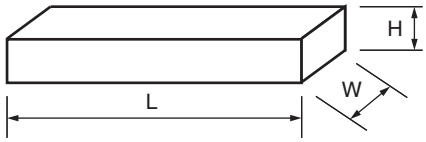

L	W	H
540	125	75

(Dimensions in mm)

(2) Dimensions for outer box

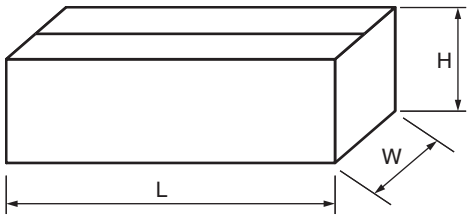

L	W	H
565	270	180

(Dimensions in mm)

2. Emboss Tape (MB85RS512LYPNF-GS-BCERE1)

2.1 Tape Dimensions (not drawn to scale) (8-pin plastic SOP)

Maximum storage capacity		
pcs/reel(Φ254mm)	pcs/inner box	pcs/uter boxo
1500	1500 (1 pack/inner box)	9000 (6 inner boxes/outer box:Max)

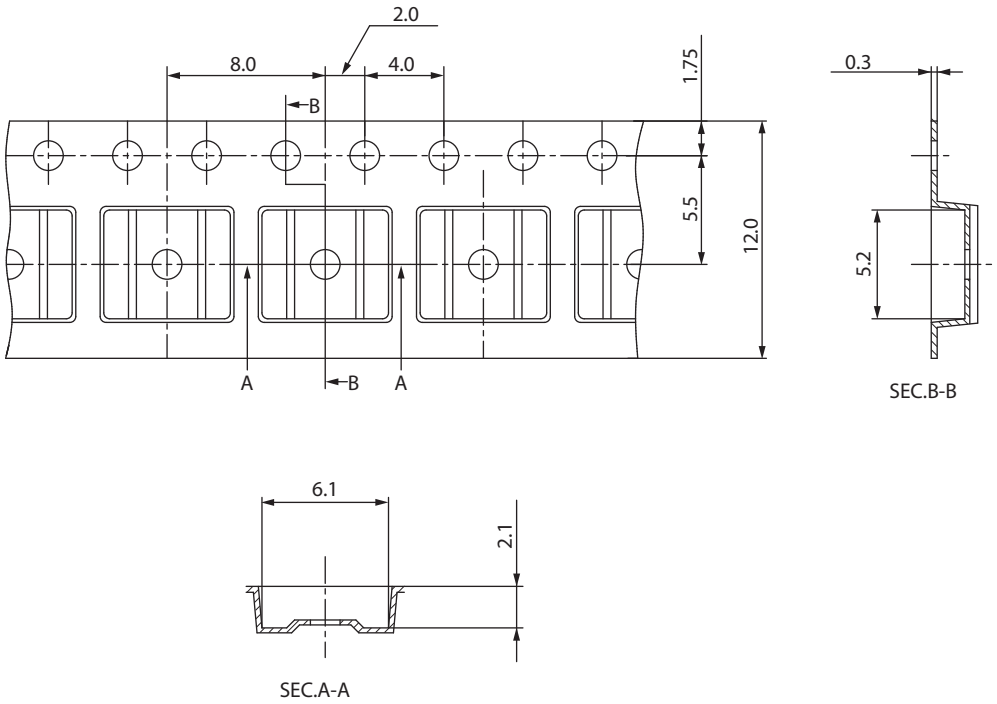

(Dimensions in mm)

Heat proof temperature : No heat resistance.
Package should not be baked by using tape and reel.

2.2 IC orientation

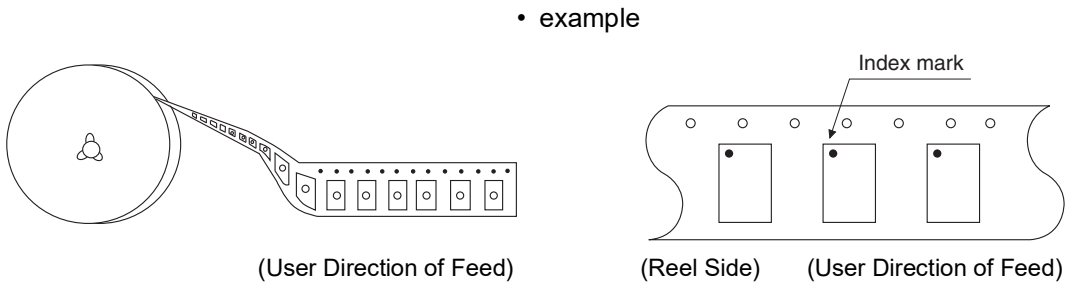

2.3 Reel dimensions

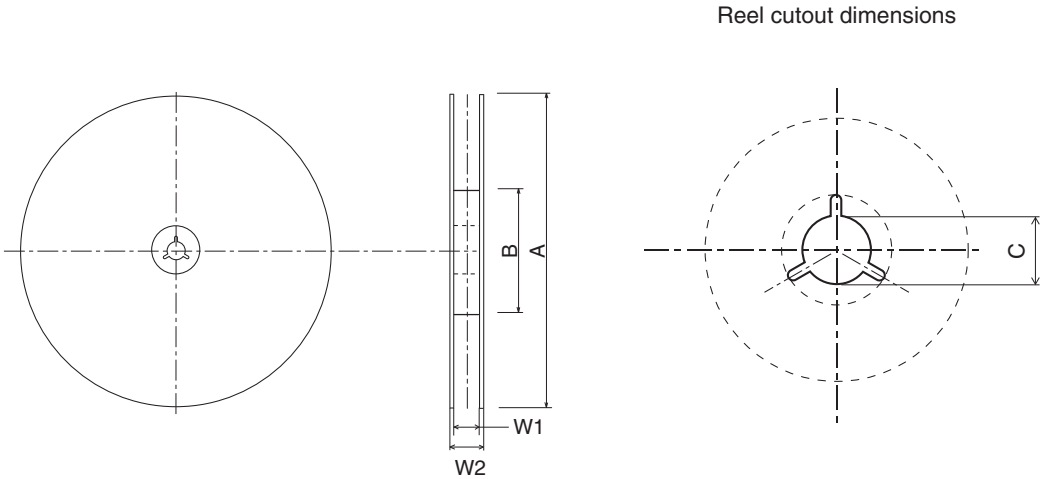

Dimensions in mm

A	B	C	W1	W2
254	100	13	13.5	17.5

2.4 Product label indicators (examples)

Label I: Label on Inner box/Moisture Barrier Bag/ (It sticks it on the reel for the emboss taping)
[C-3 Label (50mm × 100mm) Supplemental Label (20mm × 100mm)]

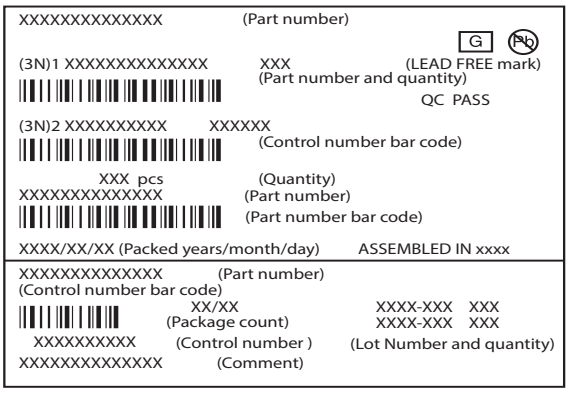

C-3 Label

Perforated line

Supplemental Label

Label II: Moisture Barrier Bag (It sticks it on the Aluminum laminated bag)
[MSL Label]

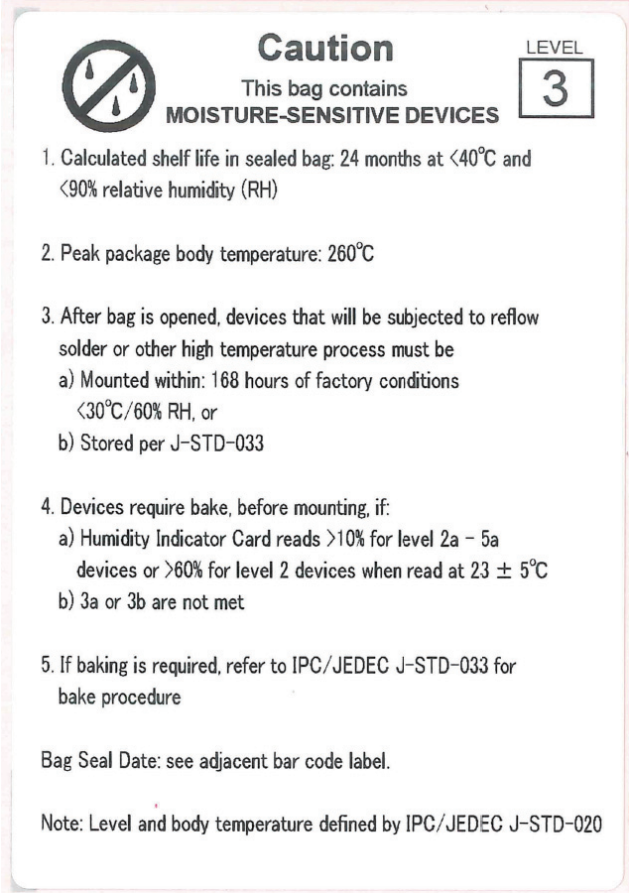

MSL label

2.5 Dimensions for Containers

(1) Dimensions for inner box

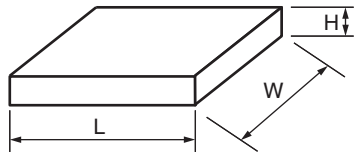

Tape width	L	W	H
12	266	263	52

(Dimensions in mm)

(2) Dimensions for outer box

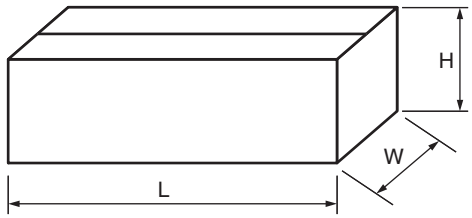

L	W	H
555	255	160

(Dimensions in mm)

(2) MB85RS512LYPN-GS-AWE1/MB85RS512LYPN-GS-AWEWE1

1. Tray (MB85RS512LYPN-GS-AWE1)

1.1 Tray Dimensions

DFN8

Maximum storage capacity		
pcs/tray	pcs/inner box	pcs/outer box
455	4550	9100

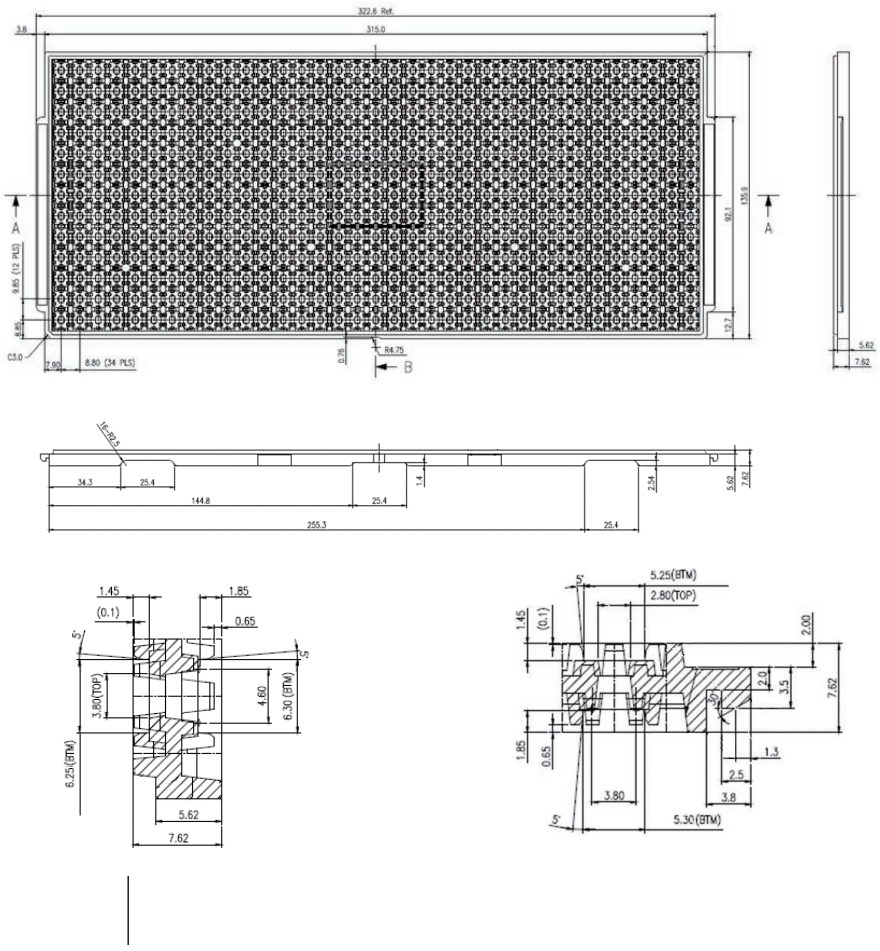

(Dimensions in mm)

Heat proof temperature : 150 °C Max

1.2 IC orientation

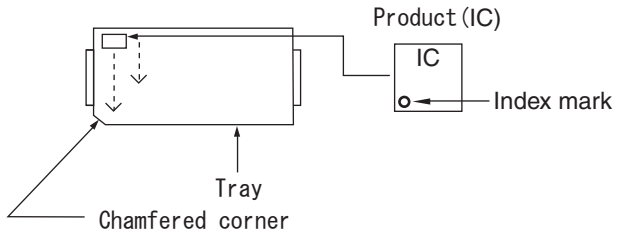

1.3 Product label indicators(example)

Label I: Label on Inner box/Moisture Barrier Bag/ (It sticks it on the reel for the emboss taping)
[C-3 Label (50mm × 100mm) Supplemental Label (20mm × 100mm)]

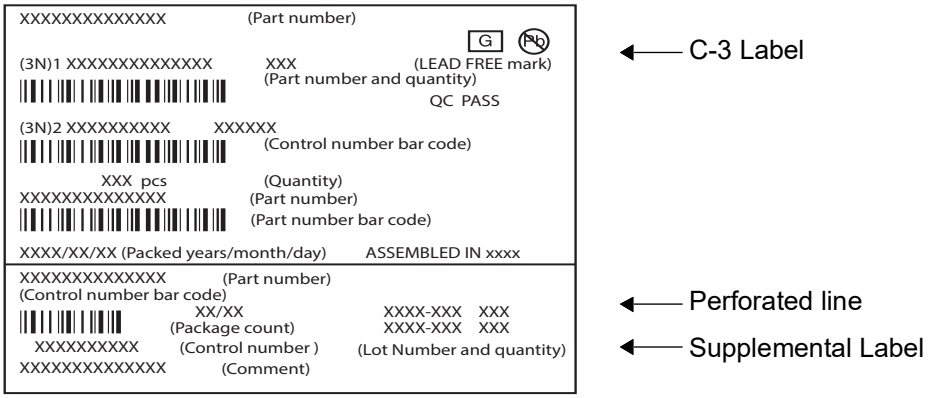

1.4 Dimensions for Containers

(1) Dimensions for inner box

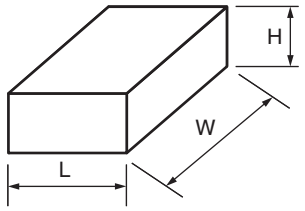

L	W	H
175	375	110

(Dimensions in mm)

(2) Dimensions for outer box

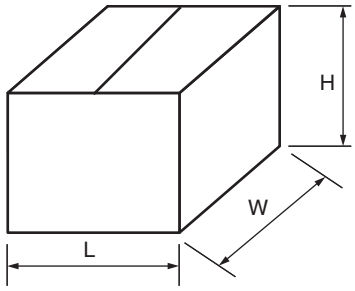

L	W	H
190	380	330

(Dimensions in mm)

2. Emboss Tape (MB85RS512LYPN-GS-AWEWE1)

2.1 Tape Dimensions (not drawn to scale)(8-pin plastic DFN 5mm × 6mm)

Maximum storage capacity		
pcs/reel(Φ330mm)	pcs/inner box	pcs/uter boxo
1500	1500 (1 pack/inner box)	7500 (5 inner boxes/outer box:Max)

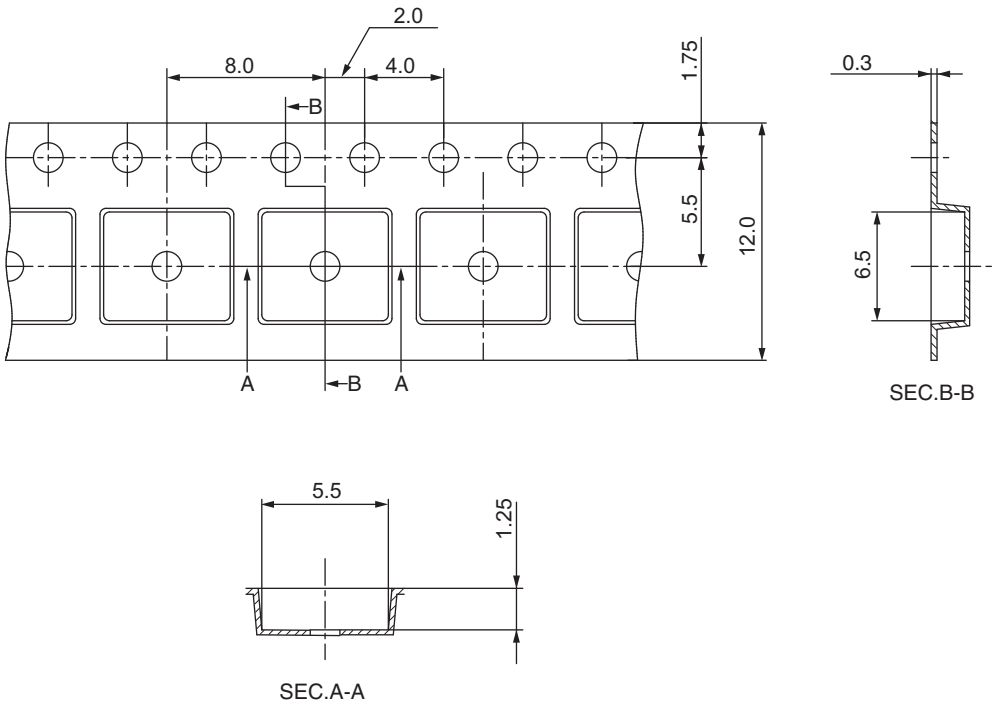

(Dimensions in mm)

Heat proof temperature : No heat resistance.
Package should not be baked by using tape and reel.

2.2 IC orientation

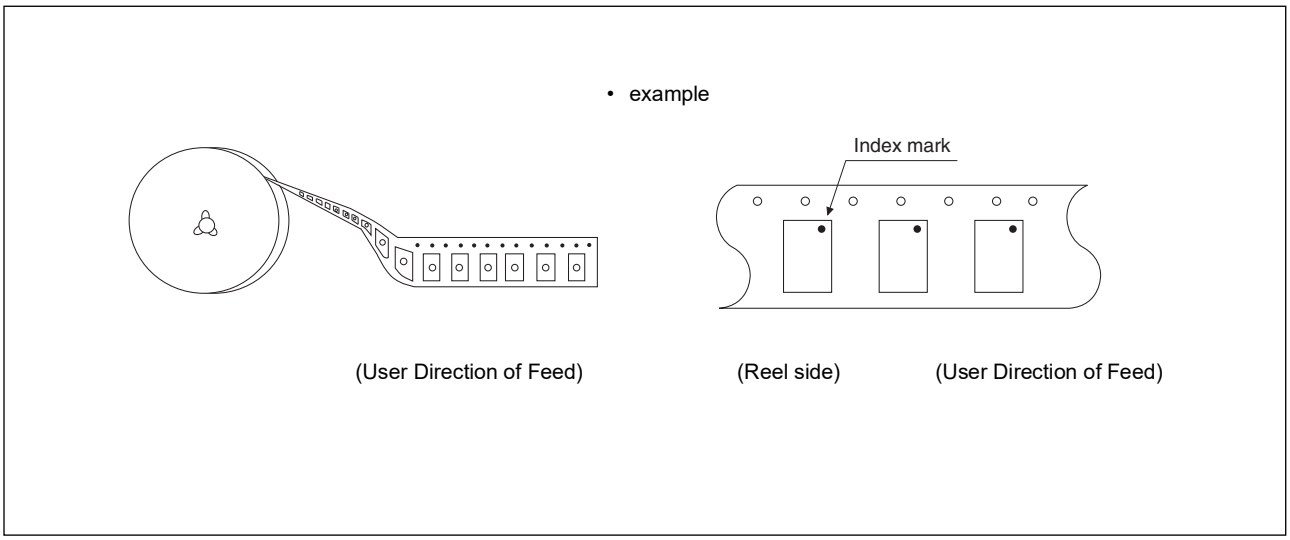

2.3 Reel dimensions

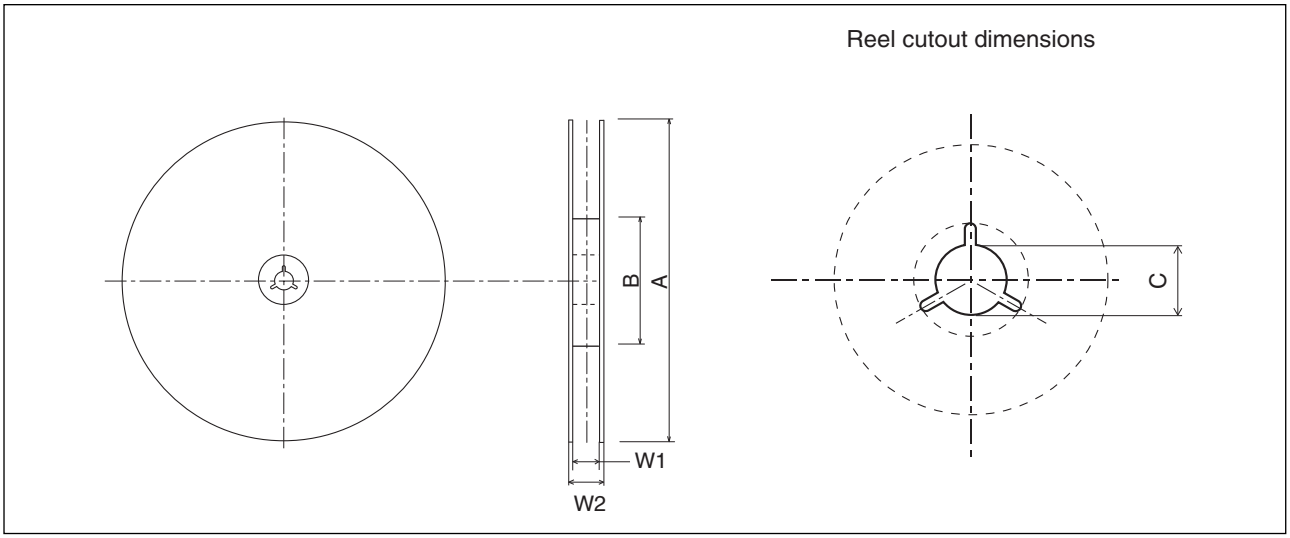

Dimensions in mm

A	B	C	W1	W2
330	100	13	13.5	17.5

2.4 Product label indicators (example)

Label I: Label on Inner box/Moisture Barrier Bag/ (It sticks it on the reel for the emboss taping)
[C-3 Label (50mm × 100mm) Supplemental Label (20mm × 100mm)]

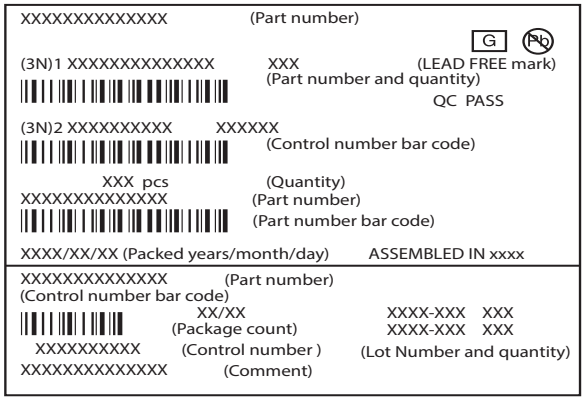

C-3 Label

Perforated line

Supplemental Label

Label II: Moisture Barrier Bag (It sticks it on the Aluminum laminated bag)

[MSL Label]

MSL label

2.5 Dimensions for Containers

(1) Dimensions for inner box

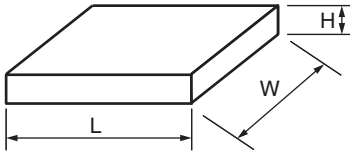

Tape width	L	W	H
12	350	335	35

(Dimensions in mm)

(2) Dimensions for outer box

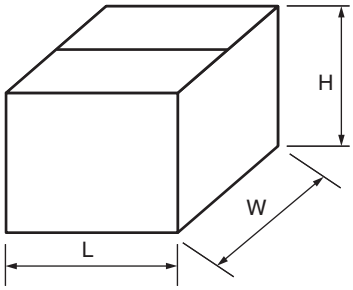

L	W	H
384	368	225

(Dimensions in mm)

FUJITSU SEMICONDUCTOR MEMORY SOLUTION LIMITED
Shin-Yokohama Chuo Building, 2-100-45 Shin-Yokohama,
Kohoku-ku, Yokohama, Kanagawa 222-0033, Japan
https://www.fujitsu.com/jp/fsm/en/

All Rights Reserved.
FUJITSU SEMICONDUCTOR MEMORY SOLUTION LIMITED, its subsidiaries and affiliates (collectively, "FUJITSU SEMICONDUCTOR MEMORY SOLUTION ") reserves the right to make changes to the information contained in this document without notice. Please contact your FUJITSU SEMICONDUCTOR MEMORY SOLUTION sales representatives before order of FUJITSU SEMICONDUCTOR MEMORY SOLUTION device.
Information contained in this document, such as descriptions of function and application circuit examples is presented solely for reference to examples of operations and uses of FUJITSU SEMICONDUCTOR MEMORY SOLUTION device. FUJITSU SEMICONDUCTOR MEMORY SOLUTION disclaims any and all warranties of any kind, whether express or implied, related to such information, including, without limitation, quality, accuracy, performance, proper operation of the device or non-infringement. If you develop equipment or product incorporating the FUJITSU SEMICONDUCTOR MEMORY SOLUTION device based on such information, you must assume any responsibility or liability arising out of or in connection with such information or any use thereof. FUJITSU SEMICONDUCTOR MEMORY SOLUTION assumes no responsibility or liability for any damages whatsoever arising out of or in connection with such information or any use thereof.
Nothing contained in this document shall be construed as granting or conferring any right under any patents, copyrights, or any other intellectual property rights of FUJITSU SEMICONDUCTOR MEMORY SOLUTION or any third party by license or otherwise, express or implied. FUJITSU SEMICONDUCTOR MEMORY SOLUTION assumes no responsibility or liability for any infringement of any intellectual property rights or other rights of third parties resulting from or in connection with the information contained herein or use thereof.
The products described in this document are designed, developed and manufactured as contemplated for general use including without limitation, ordinary industrial use, general office use, personal use, and household use, but are not designed, developed and manufactured as contemplated (1) for use accompanying fatal risks or dangers that, unless extremely high levels of safety is secured, could lead directly to death, personal injury, severe physical damage or other loss (including, without limitation, use in nuclear facility, aircraft flight control system, air traffic control system, mass transport control system, medical life support system and military application), or (2) for use requiring extremely high level of reliability (including, without limitation, submersible repeater and artificial satellite). FUJITSU SEMICONDUCTOR MEMORY SOLUTION shall not be liable for you and/or any third party for any claims or damages arising out of or in connection with above-mentioned uses of the products.
Any semiconductor devices fail or malfunction with some probability. You are responsible for providing adequate designs and safeguards against injury, damage or loss from such failures or malfunctions, by incorporating safety design measures into your facility, equipments and products such as redundancy, fire protection, and prevention of overcurrent levels and other abnormal operating conditions.
The products and technical information described in this document are subject to the Foreign Exchange and Foreign Trade Control Law of Japan, and may be subject to export or import laws or regulations in U.S. or other countries. You are responsible for ensuring compliance with such laws and regulations relating to export or re-export of the products and technical information described herein.
All company names, brand names and trademarks herein are property of their respective owners.

Edited: Sales and Marketing Division