Crossbar Box

for Fujitsu SPARC M12 and
Fujitsu M10/SPARC M10

Service Manual

Manual Code: C120-0008-12EN
June 2023

Contents

Preface

This document describes the maintenance procedure for crossbar boxes for the Oracle or Fujitsu SPARC M12 or SPARC M10.
This document can also be used as a disassembly procedure for disposal or recycling.
The maintenance work should be performed by service engineers and/or field engineers.

Fujitsu SPARC M12 is sold as SPARC M12 by Fujitsu in Japan.
Fujitsu SPARC M12 and SPARC M12 are identical products.

Fujitsu M10 is sold as SPARC M10 by Fujitsu in Japan.
Fujitsu M10 and SPARC M10 are identical products.

Audience

This document is intended for trained technicians and authorized service personnel who have been instructed on the hazards within the equipment and are qualified to remove and replace hardware. They may be called service engineers or field engineers.

Related Documentation

All documents for your server are available online at the following locations.

- Sun Oracle software-related documents (Oracle Solaris, etc.)
  https://docs.oracle.com/en/
- Fujitsu documents
  Global site

  https://www.fujitsu.com/global/products/computing/servers/unix/sparc/downloads/manuals/

  Japanese site

https://www.fujitsu.com/jp/products/computing/servers/unix/sparc/downloads/manual/

For a system using the SPARC M12, see the manuals listed in "Documentation Related to the SPARC M12."

For a system using the SPARC M10, see the manuals listed in "Documentation Related to the SPARC M10."

Documentation Related to the SPARC M12

Manual Names (*1)
Fujitsu SPARC M12 Product Notes
Fujitsu SPARC M12 Quick Guide
Fujitsu SPARC M12 Getting Started Guide (*2)
Fujitsu SPARC M12 and Fujitsu M10/SPARC M10 Important Legal and Safety Information (*2)
Fujitsu SPARC M12 and Fujitsu M10/SPARC M10 Safety and Compliance Guide
Software License Conditions for Fujitsu SPARC M12 and Fujitsu M10/SPARC M10
Fujitsu SPARC M12 and Fujitsu M10/SPARC M10 Security Guide
Fujitsu SPARC Servers/SPARC Enterprise/PRIMEQUEST Common Installation Planning Manual
Fujitsu SPARC M12-1 Installation Guide
Fujitsu SPARC M12-2 Installation Guide
Fujitsu SPARC M12-2S Installation Guide
Fujitsu SPARC M12 PCI Card Installation Guide
Fujitsu SPARC M12 and Fujitsu M10/SPARC M10 System Operation and Administration Guide
Fujitsu SPARC M12 and Fujitsu M10/SPARC M10 Domain Configuration Guide
Fujitsu SPARC M12 and Fujitsu M10/SPARC M10 RCIL User Guide (*3)
Fujitsu SPARC M12 and Fujitsu M10/SPARC M10 XSCF Reference Manual
Fujitsu SPARC M12 and Fujitsu M10/SPARC M10 XSCF MIB and Trap Lists
Fujitsu SPARC M12-1 Service Manual
Fujitsu SPARC M12-2/M12-2S Service Manual
Crossbar Box for Fujitsu SPARC M12 and Fujitsu M10/SPARC M10 Service Manual
PCI Expansion Unit for Fujitsu SPARC M12 and Fujitsu M10/SPARC M10 Service Manual
Fujitsu SPARC M12 and Fujitsu M10/SPARC M10 Glossary
External USB-DVD Drive user guide

*1 The listed manuals are subject to change without notice.
*2 Printed manuals are provided with the product.
*3 This document applies specifically to the SPARC M12/M10 and FUJITSU ETERNUS disk storage system.

Documentation Related to the SPARC M10

Manual Names (*1)
Fujitsu M10/SPARC M10 Systems Product Notes
Fujitsu M10/SPARC M10 Systems Quick Guide
Fujitsu M10/SPARC M10 Systems Getting Started Guide (*2)
Fujitsu SPARC M12 and Fujitsu M10/SPARC M10 Important Legal and Safety Information (*2)
Fujitsu SPARC M12 and Fujitsu M10/SPARC M10 Safety and Compliance Guide
Software License Conditions for Fujitsu SPARC M12 and Fujitsu M10/SPARC M10
Fujitsu SPARC M12 and Fujitsu M10/SPARC M10 Security Guide
Fujitsu SPARC Servers/SPARC Enterprise/PRIMEQUEST Common Installation Planning Manual
Fujitsu M10-1/SPARC M10-1 Installation Guide
Fujitsu M10-4/SPARC M10-4 Installation Guide
Fujitsu M10-4S/SPARC M10-4S Installation Guide
Fujitsu M10/SPARC M10 Systems PCI Card Installation Guide
Fujitsu SPARC M12 and Fujitsu M10/SPARC M10 System Operation and Administration Guide
Fujitsu SPARC M12 and Fujitsu M10/SPARC M10 Domain Configuration Guide
Fujitsu SPARC M12 and Fujitsu M10/SPARC M10 RCIL User Guide (*3)
Fujitsu SPARC M12 and Fujitsu M10/SPARC M10 XSCF Reference Manual
Fujitsu SPARC M12 and Fujitsu M10/SPARC M10 XSCF MIB and Trap Lists
Fujitsu M10-1/SPARC M10-1 Service Manual
Fujitsu M10-4/Fujitsu M10-4S/SPARC M10-4/SPARC M10-4S Service Manual
Crossbar Box for Fujitsu SPARC M12 and Fujitsu M10/SPARC M10 Service Manual
PCI Expansion Unit for Fujitsu SPARC M12 and Fujitsu M10/SPARC M10 Service Manual
Fujitsu SPARC M12 and Fujitsu M10/SPARC M10 Glossary
External USB-DVD Drive user guide

*1 The listed manuals are subject to change without notice.
*2 Printed manuals are provided with the product.
*3 This document applies specifically to the SPARC M12/M10 and FUJITSU ETERNUS disk storage system.

Notes on Safety

Read the following documents thoroughly before using or handling the SPARC M12/M10.

- *Fujitsu SPARC M12 and Fujitsu M10/SPARC M10 Important Legal and Safety Information*

- *Fujitsu SPARC M12 and Fujitsu M10/SPARC M10 Safety and Compliance Guide*

Text Conventions

This manual uses the following fonts and symbols to express specific types of information.

Font/Symbol	Meaning	Example
AaBbCc123	What you type, when contrasted with on-screen computer output. This font is used to indicate an example of command input.	XSCF> **adduser jsmith**
AaBbCc123	The names of commands, files, and directories; on-screen computer output. This font is used to indicate an example of command output in the frame.	XSCF> **showuser -P** User Name: jsmith Privileges: useradm auditadm
Italic	Indicates the name of a reference manual.	See the *Fujitsu M10-1/SPARC M10-1 Installation Guide*.
" "	Indicates the names of chapters, sections, items, buttons, or menus.	See "Chapter 2 Network Connection."

Command Syntax in the Text

While the XSCF commands have a section number of (8) or (1), it is omitted from the text.
For details on the commands, see the *Fujitsu SPARC M12 and Fujitsu M10/SPARC M10 XSCF Reference Manual*.

Syntax of the Command-Line Interface (CLI)

The command syntax is as follows:

- A variable that requires the input of a value is in Italics.
- An optional element is enclosed in [].
- A group of options for an optional keyword is enclosed in [] and delimited by |.

Document Feedback

If you have any comments or requests regarding this document, please take a moment to share them with us. Along with the manual code, manual title, and page number, state your points specifically at one of the following websites:

- Global site
  https://www.fujitsu.com/global/contact/
- Japanese site
  https://www.fujitsu.com/jp/products/computing/servers/unix/sparc/contact/

Chapter 1

Before Starting Maintenance Work

This chapter describes the safety precautions that must be observed before starting any maintenance work.
Note the meanings of each of the following symbols and labels to ensure that the work is done correctly.

- Warning/Caution Indications
- Labels/Tags
- Safety Precautions
- Notes Regarding Static Electricity
- Other Precautions
- Emergency Power Off

1.1 Warning/Caution Indications

This manual uses the following conventions to indicate warning and alert messages, which are intended to prevent injury to the user and others as well as damage to property.

Warning - "WARNING" indicates a potential hazard that could result in death or serious personal injury if the user does not perform the procedure correctly.

Caution - "CAUTION" indicates a potential hazard that could result in minor or moderate personal injury if the user does not perform the procedure correctly. This also indicates that damage to the unit or other property may occur if the user does not perform the procedure correctly.

1.2 Labels/Tags

This section describes the labels and tags that are affixed to the crossbar box chassis.

When performing maintenance, always observe the precautions on the standard labels affixed to the chassis.

Caution - Do not remove the labels or tags.

Note - The contents of the labels and tags described here may differ from those actually affixed to the chassis.

- The system name plate label (A in Figure 1-1) describes the model number, serial number, manufacture date, and weight required for maintenance and management.
- The standard label (B in Figure 1-1) contains notes, rated voltage/current, number of phases, frequency, and the following certification standards.
  - Safety: NRTL/C
  - Radio wave: VCCI, FCC, ICES, and KCC
  - Safety and radio wave: CE, EAC, and RCM

Figure 1-1 Location of the System Name Plate Label and Standard Label

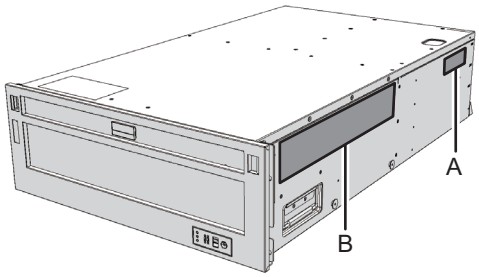

- The RFID tag (Figure 1-2) carries an Asset ID. The RFID tag is affixed to the front cover.

Figure 1-2 RFID Tag

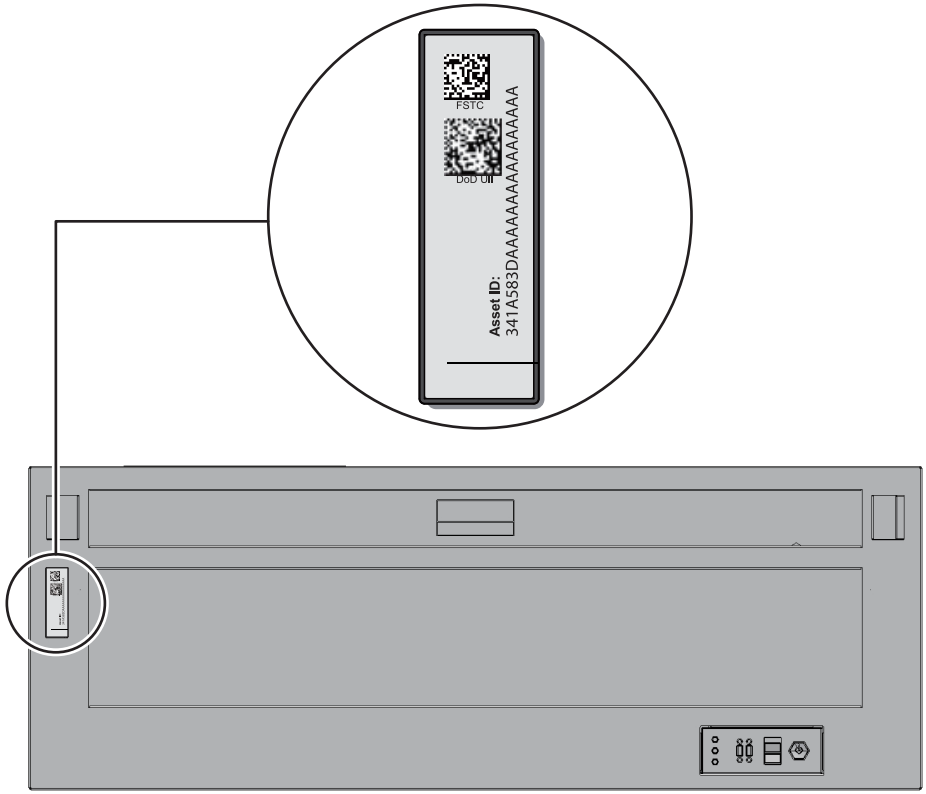

1.3 Safety Precautions

Caution - Observe the following precautions to protect yourself when performing maintenance.

- Observe all the precautions, warnings, and instructions described on the chassis.
- Do not insert foreign objects into the openings in the chassis. Any such foreign object could come into contact with high-voltage circuitry or could short circuit the components, causing a fire or an electric shock.
- Contact our service engineer to inspect the chassis.

Safety Precautions on Electricity

- Confirm that the voltage and frequency of your input power supply match the

electric rating described on the standard label affixed to the chassis.

- Wear a wrist strap when handling a hard disk drive, CPU memory unit, or other printed boards.
- Use grounded power outlets.
- Do not attempt to make any mechanical or electrical modifications. Fujitsu shall not be responsible for the regulatory compliance of a chassis that has been modified.

Safety Precautions on the Racks

- The racks should be fixed to the floor, ceiling, or the adjacent frame.
- The racks may be supplied with a quakeresistant options kit. The use of the quakeresistant options kit prevents the racks from falling over during installation or maintenance service on the chassis.
- Prior to installation or maintenance, a safety assessment should be conducted by our service engineer in the following case:
  - If the quakeresistant options kit is not supplied and the rack is not fixed to the floor with bolts, check safety to confirm, for example, that the rack will not fall over.
- If multiple chassis are mounted in a rack, perform maintenance for each of the chassis.

For details on the racks, see "Planning and Preparing for System Installation" in the *Installation Guide* for your server.

1.4 Notes Regarding Static Electricity

Caution - Observe the precautions related to electrostatic discharge (ESD) as described in Table 1-1 to ensure the safety of personnel and the system.

Table 1-1 ESD Precautions

Item	Precaution
Wrist strap	Wear an antistatic wrist strap when handling printed boards and components with electronic components mounted.
ESD mat	An approved ESD mat provides protection from static damage when used with a wrist strap. The mat also acts as a cushion to protect the small parts that are attached to printed boards.
Antistatic bag/ ESD safe packaging box	After removing a printed board or component, place it in the antistatic bag or ESD safe packaging box.

How to Use a Wrist Strap

Wear a wrist strap in such a way that the inner metal surface (A in Figure 1-3) of the wrist strap band is in contact with your skin. Connect the clip (B in Figure 1-3) directly to the chassis.

Caution - Do not connect the wrist strap clip to the ESD mat. By connecting the wrist strap clip to the chassis, the operator and components have the same potential, thus eliminating the danger of static damage.

Figure 1-3 Wrist Strap Connection Destination

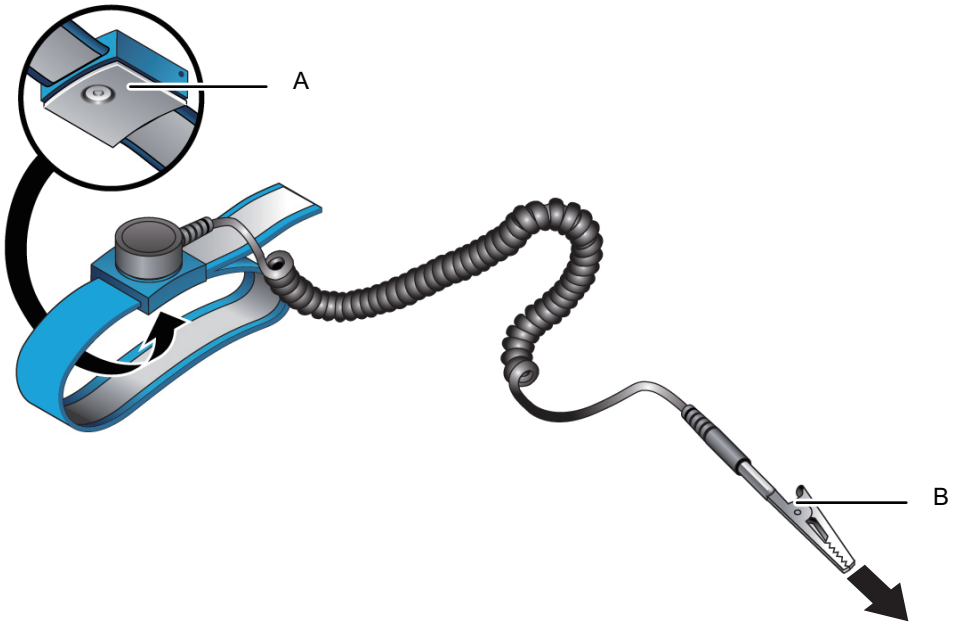

1.5 Other Precautions

Caution - Observe the following precautions to ensure the safety of the system.

- Printed boards in the chassis can be easily damaged by static electricity. To prevent damage to printed boards, wear a wrist strap, and connect it to the chassis prior to starting maintenance.

- When mounting any component in the chassis, check the connectors on both the chassis and the component beforehand to confirm that no pin is bent and that all the pins are neatly arranged in lines. If a component is mounted with a bent pin in a connector, the chassis or component may be damaged. Also, carefully proceed with the work to prevent any pin from being bent.
- When removing a cable such as the LAN cable, if you cannot reach the latch lock of the connector, use a flat headed screwdriver etc. to push the latch and release the cable. Do not use excessive force to remove the cable. Otherwise, the LAN port could be damaged.
- Do not use any power cord other than the specified one.
- Check the appearance of the products before starting work. Confirm that there are no faults such as unit deformation or connector damage when opening the packaging.
  Do not install the products if there is a fault in the appearance. If you mount a product that has a fault in the appearance, it may damage the server and the crossbar box.

1.6 Emergency Power Off

This section explains the procedure for powering off the system in an emergency.

Caution - In an emergency (such as smoke or flames coming from the chassis), immediately stop using the unit and turn off the power supply. Regardless of the operation you are performing, give top priority to fire prevention.

1. **Remove all the power cords from the power supply unit.**
   For details, see "5.5.1 Removing the Power Cord."

Figure 1-4 Removing the Power Cords

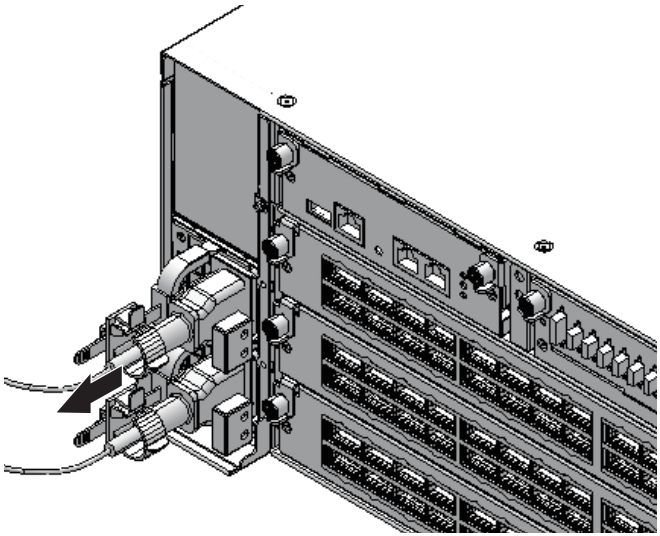

Chapter 2

Understanding the System Components

This chapter describes the components mounted in the crossbar box.
It is necessary to confirm and fully understand the configurations of the components mounted in the crossbar box as well as the LED indications before starting any maintenance work.

- Identifying the Names and Locations of Components
- Confirming the Functions of the Operation Panel
- Checking the LED Indications
- Confirming the Types of Cable

For the specifications of each component, see "Appendix B Component Specifications."

Note that the terms used in this manual are defined as follows:

Table 2-1 Definitions of Terms

Term	Definition
Chassis of the physical partition	Chassis of SPARC M12-2S or SPARC M10-4S constituting the physical partition (the crossbar box is not included)
FRU	Component that can be replaced by a field engineer (abbreviation of field replaceable unit)

2.1 Identifying the Names and Locations of Components

This section describes the names and the locations of components mounted in the crossbar box.

Components That Can be Accessed From the Front

You can access the fan unit only after removing the front cover.

Figure 2-1 Locations of components that can be accessed from the front

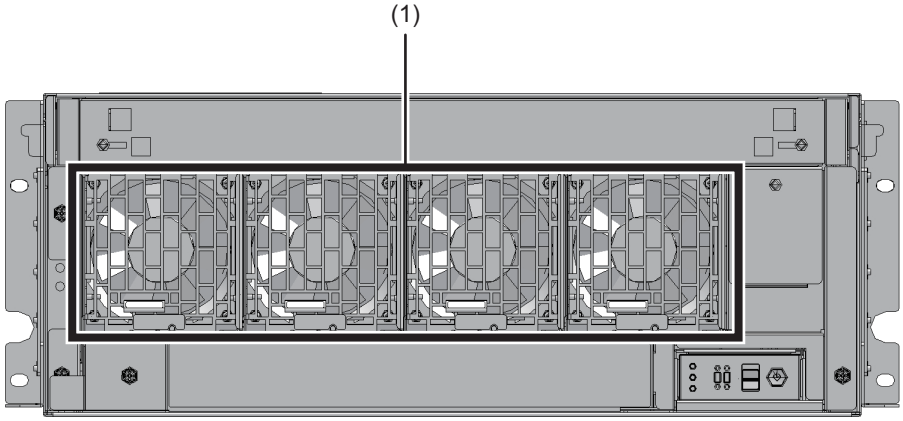

Location Number	Component
1	Fan unit

Components That Can be Accessed From the Rear

Figure 2-2 Locations of Components That Can be Accessed From the Rear

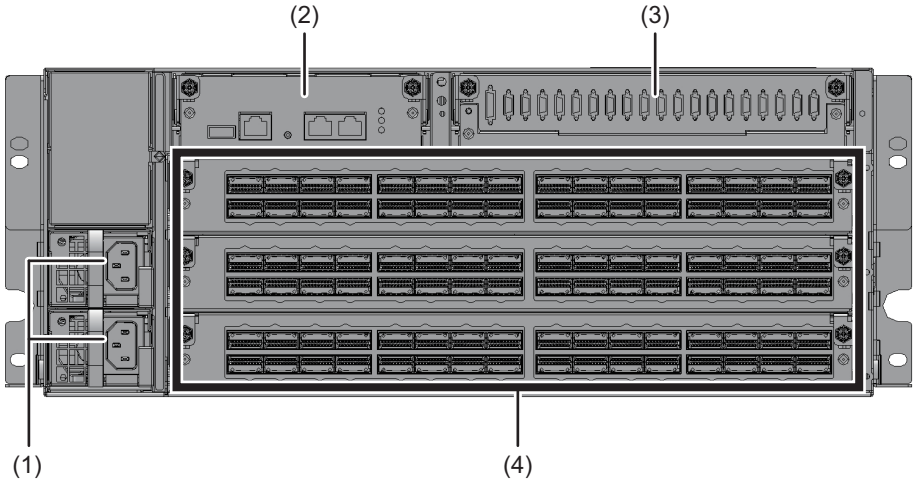

Location Number	Component
1	Power supply unit
2	XSCF unit (*1)
3	XSCF interface unit
4	Crossbar unit

*1 Different XSCF units are used for the SPARC M12-2S system and the SPARC M10-4S system. An identification label is affixed to the XSCF unit for the SPARC M12-2S.

Figure 2-3 XSCF Unit (SPARC M12-2S)

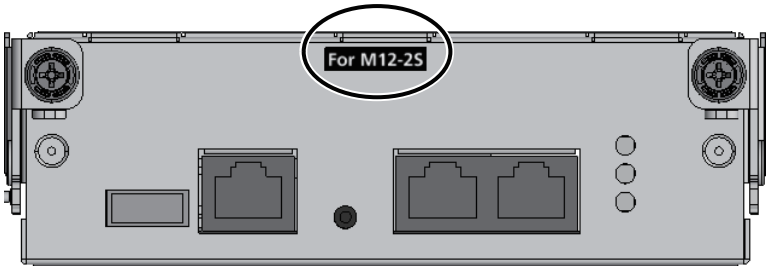

Figure 2-4 Locations of Internal Components

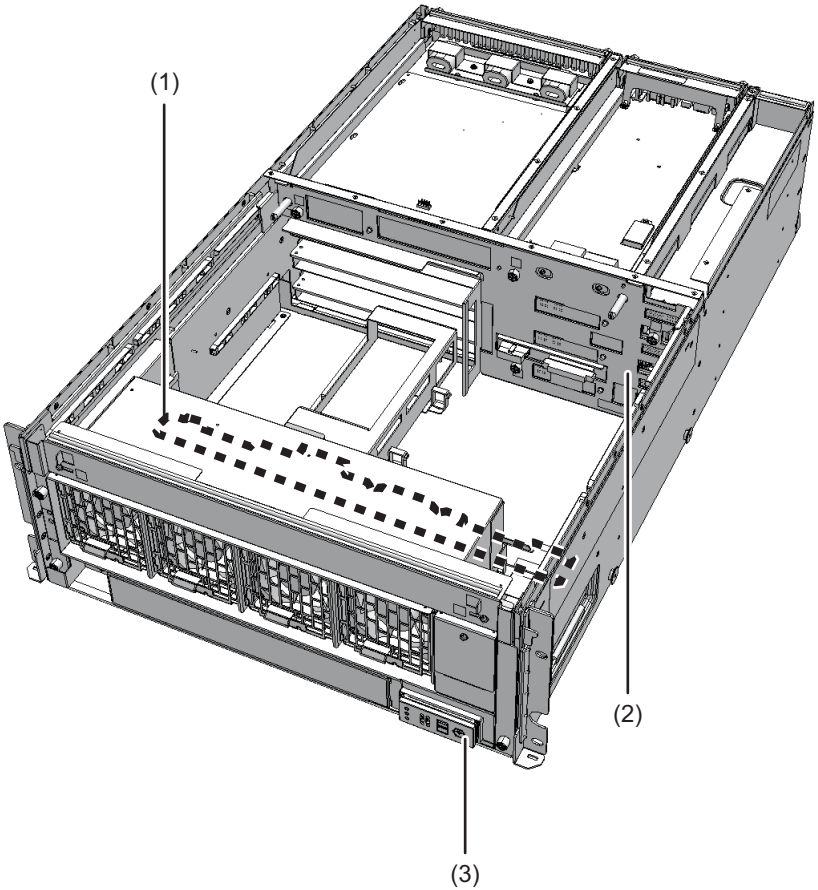

Location Number	Component
1	Fan backplane
2	Crossbar backplane unit
3	Operation panel

2.2 Confirming the Functions of the Operation Panel

This section describes the functions of the operation panel mounted in the crossbar box.
The operation panel provides the system's display and control functions. The field engineer and system administrator can specify the operation mode or control start/stop of the system while checking the LEDs indicating the system operation status.

Figure 2-5 Location of the Operation Panel

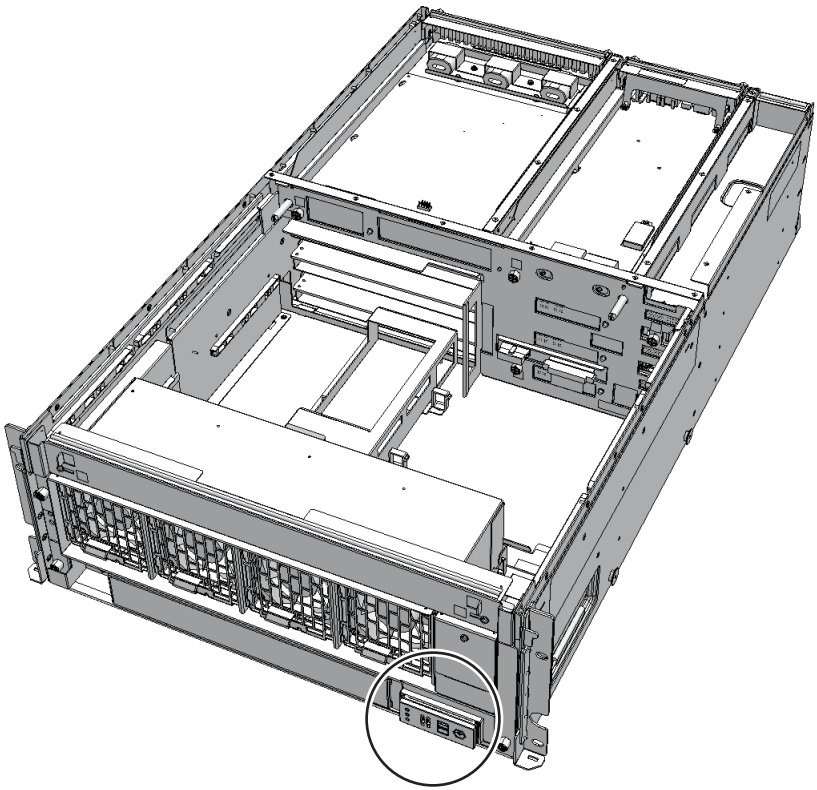

Figure 2-6 Appearance of the Operation Panel

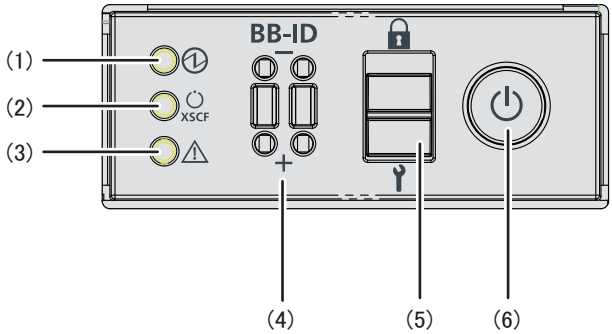

Location Number	LED/Switch
1	POWER LED
2	XSCF STANDBY LED
3	CHECK LED
4	BB-ID switch
5	Mode switch
6	Power switch

The operation panel is mounted on each crossbar box chassis. However, only the operation panel on the chassis housing the master XSCF has all of its LEDs and switches enabled.
Table 2-2 shows the display and operation status of the operation panel.

Table 2-2 Display and Operation Status of the Operation Panel

LED/Switch on Operation Panel	When Crossbar Box Acts as Master XSCF	When Crossbar Box Acts as XSCF Other Than Master XSCF
POWER LED	Enabled (Displays the start or stop status of the crossbar box)	Enabled (Displays the start or stop status of the crossbar box)
XSCF STANDBY LED	Enabled (Displays the XSCF status of the system)	Enabled (Displays the XSCF status of the crossbar box)
CHECK LED	Enabled (Displays an abnormal status of the crossbar box)	Enabled (Displays an abnormal status of the crossbar box)
BB-ID switch	Enabled (Registers a BB-ID number)	Enabled (Registers a BB-ID number)
Mode switch (*1)	Enabled (Mode operation of the system)	Disabled
Power switch	Enabled (Start/stop operation of the system)	Disabled

*1 Set the same mode for the crossbar boxes with the master XSCF and XSCF in the standby state. If the settings are different, an asterisk (*) is displayed beside the components in the output of the showhardconf or showstatus command.

2.2.1 Display Function of the Operation Panel

The operation panel has three LED indicators as a display function. The LED indicators indicate the following. For details, see "2.3.1 Operation Panel LEDs."

- General system status
- System error warning
- System error location

Figure 2-7 Operation Panel LEDs

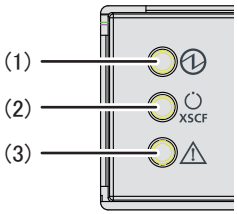

Location Number	LED
1	POWER LED
2	XSCF STANDBY LED
3	CHECK LED

2.2.2 Control Function of the Operation Panel

The operation panel has the following switches to implement its control function:

- BB-ID switch
  Identifies the crossbar box.
- Mode switch (slide switch)
  Specifies the operation or maintenance mode.
- Power switch
  Controls start/stop of the system.

Figure 2-8 Operation Panel Switches

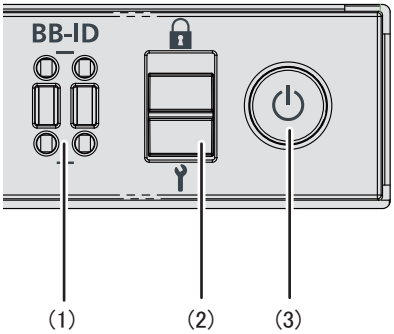

Location Number	Switch
1	BB-ID switch
2	Mode switch
3	Power switch

BB-ID switch

Use the BB-ID switch to set the BB-ID number of the crossbar box. Set #80 to #83 for the crossbar box. Table 2-3 describes how to operate the BB-ID switch.

Table 2-3 How to Operate the BB-ID Switch

Operation	Description
Pressing the + side.	The BB-ID number increases by 1.
Pressing the - side	The BB-ID number decreases by 1.

Mode switch (slide switch)

Use the mode switch to set the operation mode for the system. The Locked and Service operation modes can be switched by sliding the mode switch.

Note - Set the same operation mode for both the crossbar box of the master XSCF and that of the standby XSCF.

Table 2-4 describes the difference between the modes.

Table 2-4 Operation Modes for the System

Icon	Operation Mode	Description
	Locked mode	Mode used for normal operation - The power switch can be used to start the system but not to stop it.
	Service mode	Mode used for maintenance - The power switch cannot be used to start the system but can be used to stop it. - Place the system in Service mode to perform maintenance work with the system stopped.

Table 2-5 describes the functions of the mode switch.

Table 2-5 Functions of the Mode Switch

Function	Mode Switch	
	Locked	Service
Starting/Stopping the system by the power switch	Only system startup is enabled.	A long press powers off the system.
Inhibition of break signal reception	Enabled. Using the setpparmode command, you can specify whether to receive break signals or inhibit their reception for each physical partition.	Disabled

Power switch

Use the power switch to start or stop the system. The system starts/stops differently depending on how the power switch is pressed.
Table 2-6 describes how system starts/stops vary depending on how the power switch is pressed.

Table 2-6 Functions of the Power Switch

Icon	Operation	Description	
	Brief press (From 1 second to less than 4 seconds)	If the system has been started in Service mode (*1):	Operation is ignored.
		If the system is stopped in Service mode:	Operation is ignored.
		If the system has been started in Locked mode (*1):	Operation is ignored.
		If the system is stopped in Locked mode:	Starts the system. If a wait time for air conditioning facilities or a warmup time is set on the XSCF, the process of waiting for the facilities to power on and for the warmup to complete is omitted at this time.

Table 2-6 Functions of the Power Switch *(continued)*

Icon	Operation	Description	
	Long press (4 seconds or more)	If the system has been started in Service mode (*1):	Perform the system shutdown process to stop the system.
		If the system startup process is in progress in Service mode:	Cancels the system startup process and stops the system.
		If the system stop process is in progress in Service mode:	Continues the system stop process.
		If the system is stopped in Service mode:	Operation is ignored. Even a long press does not start the system.
		If the system is stopped in Locked mode:	Starts the system. If a wait time for air conditioning facilities or a warmup time is set on the XSCF, the process of waiting for the facilities to power on and for the warmup to complete is omitted.
		If the system is not stopped in Locked mode:	Operation is ignored.

*1 If the system has been started, it means that at least one physical partition has been powered on.

2.3 Checking the LED Indications

This section describes the status of the LEDs mounted on the crossbar box.
LEDs are mounted on the operation panel on the front of the chassis, on the rear panel of the chassis, and on each component that can be maintained. If an error occurs, the LED indication enables you to determine the system that requires maintenance.

2.3.1 Operation Panel LEDs

The three LEDs on the operation panel indicate the operation status of the entire system. In addition, the LEDs enable you to check the system status by their combination of being on, blinking, or off. For the locations of the LEDs, see Figure 2-7.
Table 2-7 lists the system operation status indicated by the LEDs, while Table 2-8 lists the system status indicated by the combination of LEDs.

Table 2-7 System Operation Status Indicated by LEDs

Icon	Name	Color	Description
	POWER	Green	Indicates the startup or stop status of the system for each chassis. • On: System is started. • Blinking: System stop processing is in progress. • Off: System is stopped.
XSCF	XSCF STANDBY	Green	Indicates the status of the XSCF for the entire system or for each chassis. • On: The XSCF is functioning normally. • Blinking: The XSCF is being initialized. • Off: The XSCF is stopped.
	CHECK	Amber	Indicates the system operation status for each chassis. • On: An error has been detected in hardware. • Blinking: Chassis specified at execution of the XSCF command instructing the blinking. This (locator) is used to identify the location of the chassis requiring maintenance. • Off: Normal, or the power is disconnected or not being supplied.

Table 2-8 System Status Indicated by Combination of LEDs

LED State			Description
POWER	XSCF STANDBY	CHECK	
	XSCF		
Off	Off	Off	Power is disconnected.
Off	Off	On	The XSCF detected an error before the system has started or after the system stopped.
Off	Blinking	Off	The XSCF is being initialized.
Off	On	Off	The XSCF is in the standby state. The system is waiting for power-on of the air conditioning facilities (in the data center).
On	On	Off	Warm-up standby processing is in progress. After the end of this processing, the system starts up. System startup processing is in progress. The system is operating.
On	On	On	Although the system is operating normally, an error has been detected.
Blinking	On	Off	System stop processing is in progress. After the end of processing, the fan unit stops.

2.3.2 LEDs on the Rear Panel (System Locator)

The field engineer and system administrator can confirm which chassis requires maintenance by using the CHECK LED (A in Figure 2-9) on the rear panel. Referred to as the system locator, the CHECK LED on the rear panel has the same function as the CHECK LED on the operation panel.

Figure 2-9 Location of the System Locator

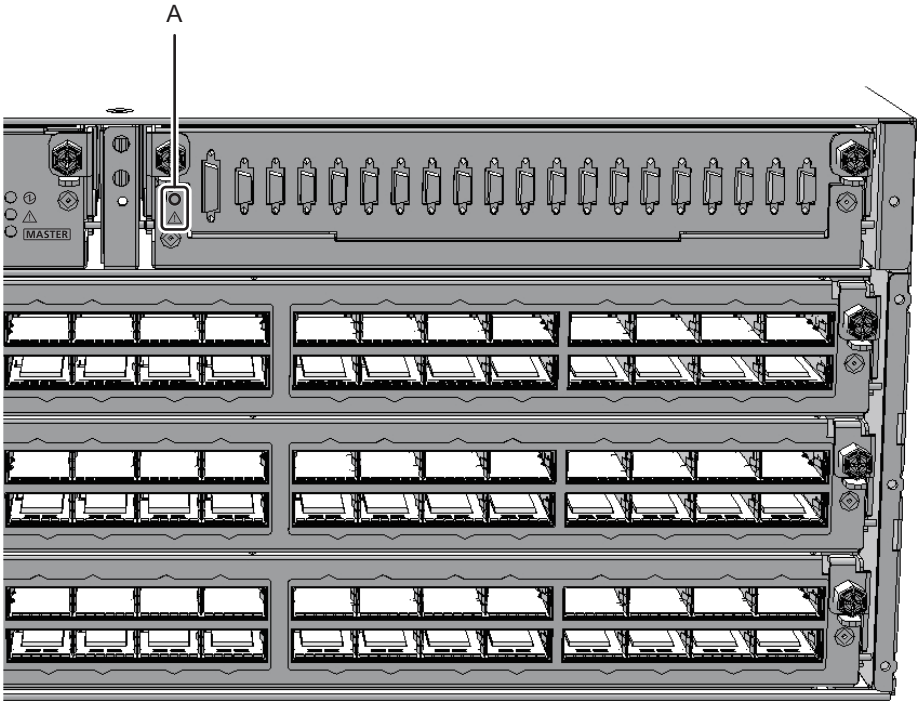

Table 2-9 Status of the System Locator

Icon	Name	Color	Description
⚠	CHECK	Amber	Indicates the system operation status for each chassis. • On: An error has been detected in hardware. • Blinking: Chassis specified at execution of the XSCF command instructing the blinking. This (locator) is used to identify the location of the chassis requiring maintenance. • Off: Normal, or the power is disconnected or not being supplied.

2.3.3 LEDs on Each Component

Each component of the crossbar box has an LED mounted. If a component experiences an error, check the LEDs to see which component requires maintenance. Check the LEDs before starting maintenance work.

The LEDs on each component and the states that they indicate are as follows.

Figure 2-10 LED Locations of the XSCF Unit and the XSCF-LAN Ports

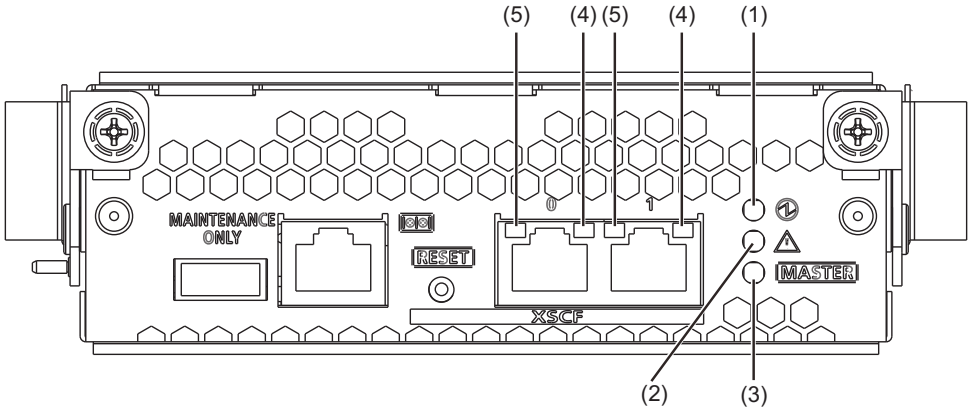

Table 2-10 LEDs on the XSCF or XSCF Unit and Their States

Location Number	Name	Color	State	Description
1	READY	Green	On	The XSCF is running.
			Blinking	The XSCF is being started.
			Off	The XSCF is stopped.
2	CHECK	Amber	On	An error has occurred.
			Blinking	The component requires maintenance. (This function is also referred to as the locator.)
			Off	Normal state
3	MASTER	Green	On	Master chassis
			Off	Slave chassis

Table 2-11 XSCF-LAN Port LEDs and Their States

Location No.	Name	Color	State	Description
4	ACT	Green	Blinking	Communication is being performed.
			Off	Communication is not being performed.
5	LINK SPEED	Amber	On	The communication speed is 1 Gbps.
		Green	On	The communication speed is 100 Mbps.
			Off	The communication speed is 10 Mbps.

Figure 2-11 Location of Fan Unit LED

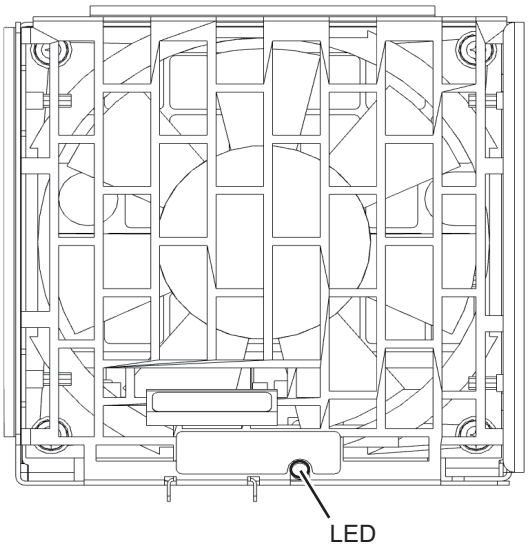

Table 2-12 LED on the Fan Unit and Its States

Name	Color	State	Description
CHECK	Amber	On	An error has occurred.
		Blinking	The component requires maintenance. (This function is also referred to as the locator.)
		Off	Normal state

Figure 2-12 Location of the Power Supply Unit LED

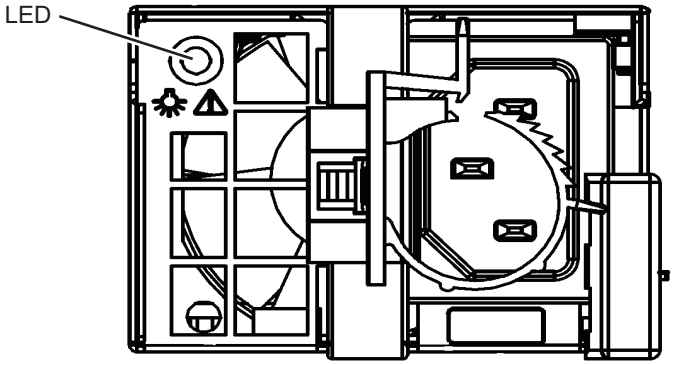

Table 2-13 Power Supply Unit LED and Its States

Name	Color	State	Description
CHECK	Green	On	The input power is turned on and being supplied normally.
		Blinking	The input power is being disconnected.
	Amber	On	An error has occurred. The input power to this power supply unit has been turned off during redundant operation.
		Blinking	Warning status (An error has occurred but the power supply unit is operating.)
		Off	Power is not being supplied.

2.4 Confirming the Types of Cable

This section describes the types of the cables that are connected to the crossbar box, as well as the locations of the cable ports.
The types and number of the cables to be used vary depending on the configuration.

2.4.1 Types of Cable

In a building block configuration, the following cables are used for connecting the chassis (SPARC M12-2S or SPARC M10-4S) of the physical partition and the crossbar box:

- Crossbar cable (optical)
  This is used to connect the chassis of the physical partition with the crossbar box

in a building block configuration with the crossbar box.

- XSCF BB control cable
  This is used to connect the XSCFs mounted in the chassis of the physical partition or the crossbar box.

  An XSCF mounted in a chassis becomes the master XSCF and monitors or controls the entire system. XSCFs other than the master XSCF act as slaves and monitor or control each chassis.

- XSCF DUAL control cable
  This is used to connect the master XSCF to a standby XSCF and duplicate XSCF.

  One of the slave XSCFs functions as the standby XSCF. If an abnormality occurs with the master XSCF, the standby XSCF becomes the master XSCF and continues the monitoring or control of the system.

Each table has a tag that is used for maintenance recording and management.

2.4.2 Cable Connection Ports

Figure 2-13 shows the location of the cable connection port of the crossbar box. See the following chapters for the procedures for maintaining the cables:

- Chapter 9 Maintaining the XSCF BB Control Cables
- Chapter 10 Maintaining the XSCF DUAL Control Cables
- Chapter 11 Maintaining the Crossbar Cables (Optical)

Figure 2-13 Locations of Cable Connection Ports

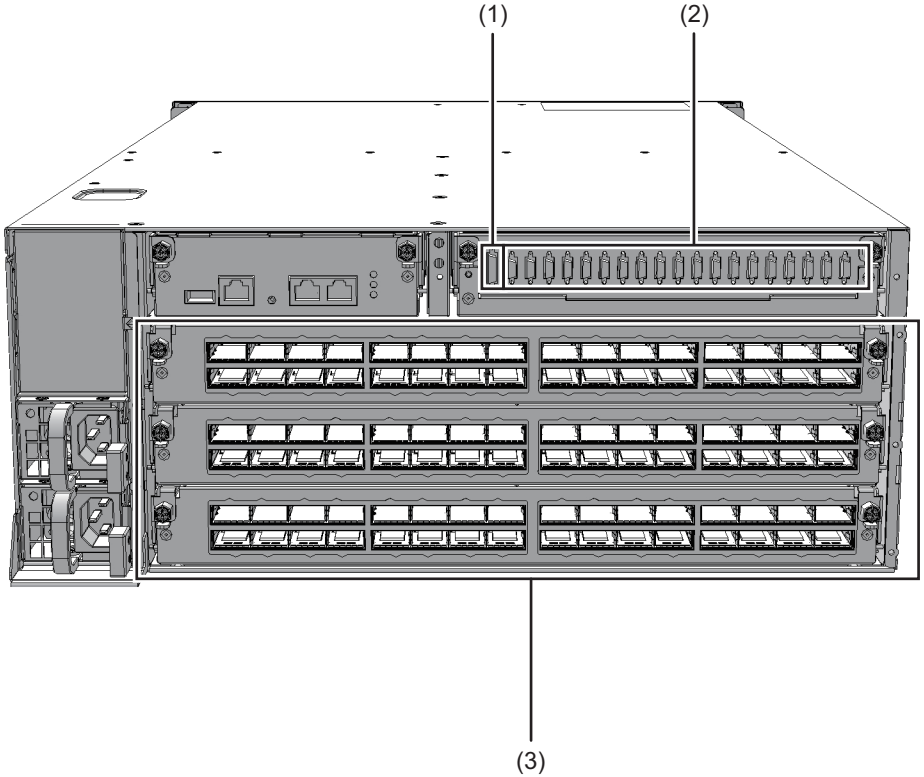

Location Number	Connection Port
1	XSCF DUAL control port
2	XSCF BB control port
3	Crossbar cable connection port

Chapter 3

Types of Maintenance

This chapter describes the types of maintenance performed on the crossbar box.

3.1 Types of Maintenance Supported for the Crossbar Box

This section describes the types of maintenance supported for the crossbar box.

3.1.1 Types of Maintenance

The types of maintenance supported for the crossbar box are divided into the following three types depending on the system operation status: active maintenance, inactive maintenance, and system-stopped maintenance.

- Active maintenance
  Maintenance is performed when the physical partition to which a FRU requiring maintenance belongs is operating.
- Inactive maintenance
  Maintenance is performed when the physical partition to which a FRU requiring maintenance belongs is stopped.
- System-stopped maintenance
  Maintenance is performed with all physical partitions stopped.

Each of the three maintenance types is further divided into two types: hot maintenance and cold maintenance.

- Hot maintenance

Maintenance is performed with all the power cords of the crossbar boxes and the SPARC M12/M10 connected.

- Cold maintenance
  Maintenance is performed with some of the power cords of SPARC M12/M10 or all the power cords of the crossbar boxes and the SPARC M12/M10 disconnected.

  To power off a crossbar box, disconnect the power cords of all the chassis of the crossbar boxes and the SPARC M12/M10.

3.1.2 Relationship Between Maintenance Parts and Types of Maintenance

The type of maintenance applicable to a maintenance part depends on whether the part belongs to all the physical partitions and whether it requires powering off of the crossbar boxes.

Parts mounted in the crossbar box, XSCF DUAL control cables, and XSCF BB control cables connecting between crossbar boxes belong to all the physical partitions.

Out of them, the following maintenance parts do not require powering off of the crossbar boxes when they are replaced. Therefore, you can perform maintenance work without stopping the physical partitions (active/hot maintenance).

- XSCF unit
- XSCF DUAL control cable
- XSCF BB control cable connecting between crossbar boxes
- Fan unit (for redundant configuration only)
- Power supply unit (for redundant configuration only)
- Dedicated power distribution unit (for redundant configuration only)

On the other hand, the following parts mounted in crossbar boxes require powering off of the crossbar boxes. Therefore, you need to stop all the physical partitions to perform the maintenance work (system-stopped/cold maintenance).

- Crossbar unit
- XSCF interface unit
- Fan backplane
- Operation panel
- Cable kit
- Crossbar backplane unit

A fan unit, a power supply unit, and a dedicated power distribution unit in a non-redundant configuration need all the physical partitions to be stopped to perform maintenance work. Note that they do not require powering off of crossbar boxes. Therefore, you can perform hot maintenance (system-stopped/hot maintenance).

An XSCF BB control cable between a crossbar box and SPARC M12/M10 belongs to the physical partition that includes the SPARC M12/M10 (BB) to which the cable is connected.

Therefore, you can perform maintenance work on this part with the physical partition operating (active/cold maintenance) if it is possible to release the connected BB dynamically by using PPAR DR.
If it is not possible to release the connected BB dynamically, stop the physical partition and perform maintenance work (inactive/cold maintenance).

A crossbar cable belongs to the physical partition that includes the SPARC M12/M10 (BB) to which the cable is connected.
However, active maintenance is not enabled for this part. Stop the physical partition and perform maintenance work (inactive/cold maintenance).

3.1.3 Maintenance on Chassis of the Physical Partition

To perform maintenance on the chassis of the physical partition, see the description for a building block configuration in "Table 3-11 Applicable Types of Maintenance in FRU Replacement for the SPARC M12-2S (Multiple-BB Configuration)" in "Chapter 3 Understanding the Types of Maintenance" in the *Fujitsu SPARC M12-2/M12-2S Service Manual* or "Table 7-2 List of available maintenance types by FRU" in "Chapter 7 Maintenance Flow" in the *Fujitsu M10-4/Fujitsu M10-4S/SPARC M10-4/SPARC M10-4S Service Manual*.

Note - For systems in the building block configuration with the crossbar box connected, addition and removal work is enabled only for the target FRUs or the chassis of the physical partitions. To add or remove any FRU of a physical partition, see "Chapter 3 Understanding the Types of Maintenance" in the *Fujitsu SPARC M12-2/M12-2S Service Manual* or "Chapter 7 Maintenance Flow" in the *Fujitsu M10-4/Fujitsu M10-4S/SPARC M10-4/SPARC M10-4S Service Manual*. To add or remove the chassis of a physical partition, see Chapter 8 or subsequent parts in the *Fujitsu SPARC M12-2S Installation Guide* or Chapter 8 or subsequent parts in the *Fujitsu M10-4S/SPARC M10-4S Installation Guide*.

3.2 Active Maintenance

The type of maintenance performed with Oracle Solaris operating on the physical partition to which the FRU requiring maintenance belongs is referred to as active maintenance.

Table 3-1 and Figure 3-1 show FRUs of the crossbar box with active maintenance enabled.

Table 3-1 FRUs With Active Maintenance (Replacement) Enabled

-: Maintenance cannot be performed.

FRU	Active/Hot Maintenance	Active/Cold Maintenance
XSCF unit	OK (*1)	-
XSCF BB control cable	OK (*2)	OK (*4)
XSCF DUAL control cable	OK	-
Power supply unit	OK (*3)	-
Fan unit	OK (*3)	-
Dedicated power distribution unit	OK (*3)	-

*1 Maintenance is performed on the XSCF in the standby state or a slave XSCF. If the XSCF is operating as the master XSCF, switch it to a standby XSCF.
*2 Hot maintenance is enabled only when you perform maintenance work on an XSCF BB control cable connecting crossbar boxes to each other.
*3 This is supported only for a redundant configuration.
*4 To maintain the XSCF BB control cable that connects the crossbar box to the SPARC M12-2S/M10-4S, the connected SPARC M12-2S/M10-4S must be powered off after it is released from the physical partition by using the PPAR DR function.

Figure 3-1 Active/Hot Maintenance

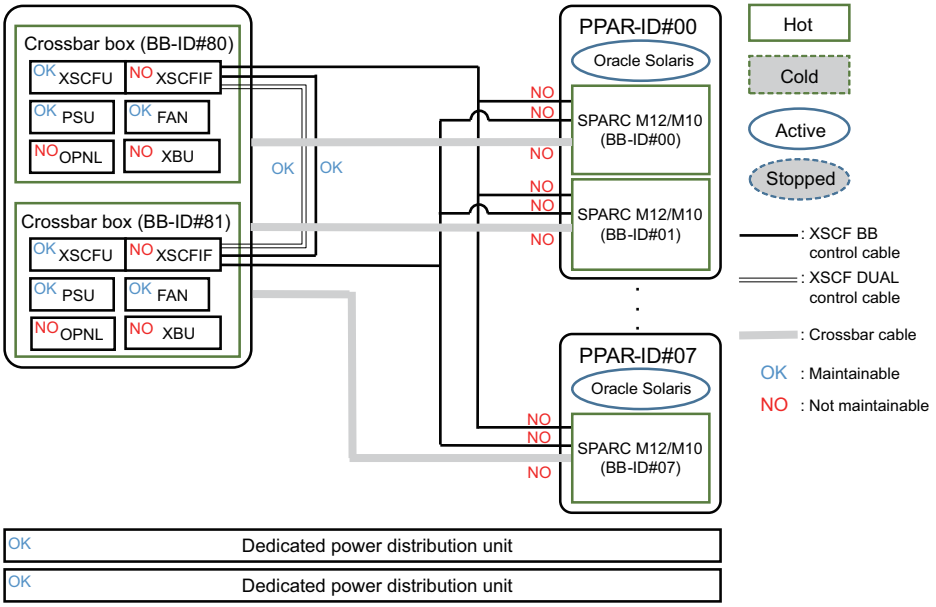

Figure 3-2 Active/Cold Maintenance

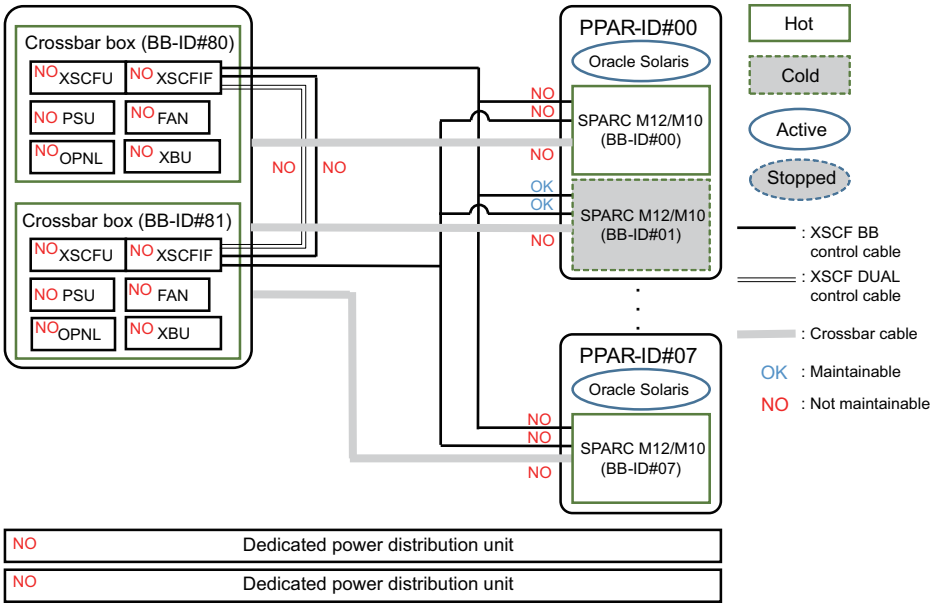

3.3 Inactive Maintenance

The type of maintenance performed with the physical partition stopped --the one to which the FRU requiring maintenance belongs--is referred to as inactive maintenance.

Table 3-2 and Figure 3-3 show FRUs of the crossbar box with inactive maintenance enabled.

Table 3-2 FRUs With Inactive Maintenance (Replacement) Enabled

-: Maintenance cannot be performed.

FRU	Inactive/Hot Maintenance	Inactive/Cold Maintenance
XSCF unit	OK (*1)	-
XSCF BB control cable	OK (*2)	OK (*4)
XSCF DUAL control cable	OK	-
Crossbar cable	-	OK (*4)
Power supply unit	OK (*3)	-
Fan unit	OK (*3)	-

Table 3-2 FRUs With Inactive Maintenance (Replacement) Enabled *(continued)*

-: Maintenance cannot be performed.

FRU	Inactive/Hot Maintenance	Inactive/Cold Maintenance
Dedicated power distribution unit	OK (*3)	-

*1 Maintenance is performed on the XSCF in the standby state or a slave XSCF. If the XSCF is operating as the master XSCF, switch it to a standby XSCF.
*2 Hot maintenance is enabled only when you perform maintenance work on an XSCF BB control cable connecting crossbar boxes to each other.
*3 This is supported only for a redundant configuration.
*4 To maintain the XSCF BB control cable or crossbar cable that connects the crossbar box to the chassis of the physical partition, the chassis of the connected physical partition must be powered off.

Figure 3-3 Inactive/Hot Maintenance

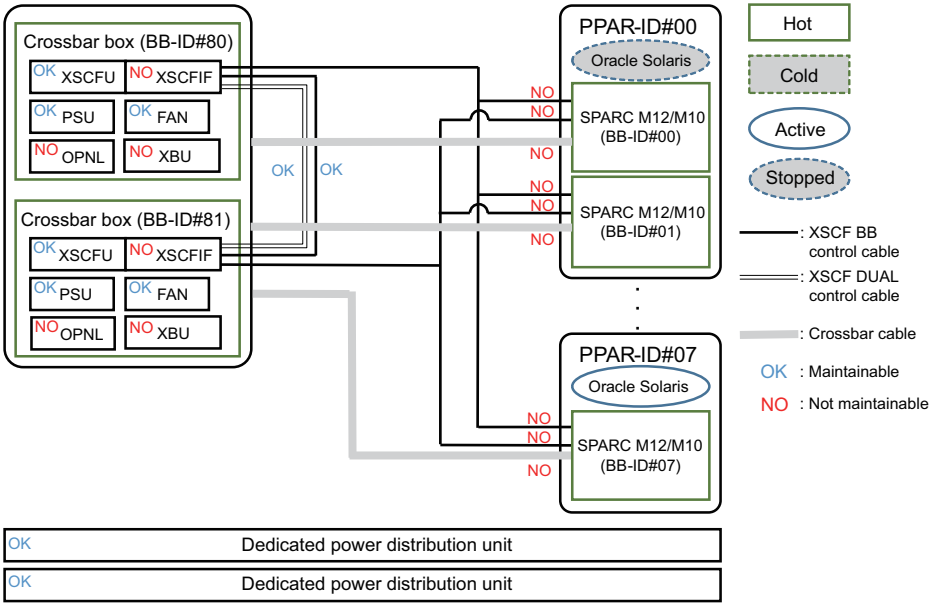

Figure 3-4 Inactive/Cold Maintenance

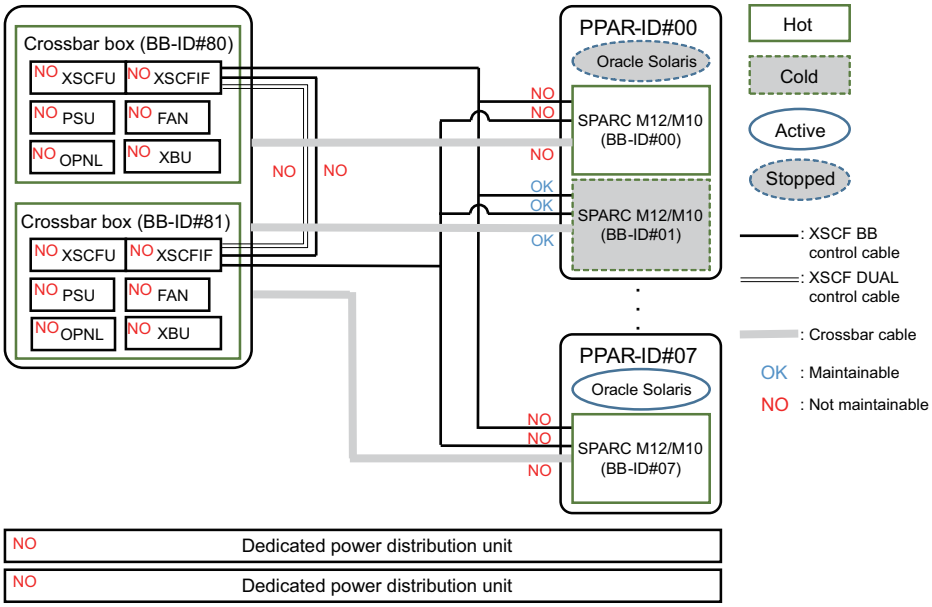

3.4 System-Stopped Maintenance

The type of maintenance performed with all the physical partitions on the system stopped is referred to as system-stopped maintenance. There are two types of maintenance work for system-stopped/cold maintenance, as follows.

- Maintenance using the maintenance menu when only the SPARC M12-2S/M10-4S connecting to the crossbar box with cables to be replaced is in the cold state
- Maintenance without using the maintenance menu when all the crossbar boxes and the SPARC M12-2S/M10-4S are in the cold state

Table 3-3, Figure 3-5, Figure 3-6, and Figure 3-7 show FRUs of the crossbar box with system-stopped maintenance enabled.

Table 3-3 FRUs for Which System-Stopped Maintenance (Replacement) is Enabled

-: Maintenance cannot be performed.

FRU	System-Stopped/Hot Maintenance	System-Stopped/Cold Maintenance
XSCF unit	OK (*1)	OK (*1, *4, *6)
XSCF BB control cable	OK (*2)	OK (*5)
XSCF DUAL control cable	OK	OK (*6)
Crossbar cable	-	OK (*5)
Crossbar unit	-	OK (*6)
Power supply unit	OK (*3)	OK (*6)
XSCF interface unit	-	OK (*6)
Fan unit	OK	OK (*6)
Fan backplane	-	OK (*6)
Operation panel	-	OK (*6)
Cable kit	-	OK (*6)
Crossbar backplane unit	-	OK (*6)
Dedicated power distribution unit	OK (*3)	OK (*6)

*1 Maintenance is performed on the XSCF in the standby state or a slave XSCF. If the XSCF is operating as the master XSCF, switch it to a standby XSCF.
*2 Hot maintenance is enabled only when you perform maintenance work on an XSCF BB control cable connecting crossbar boxes to each other.
*3 This is supported only for a redundant configuration.
*4 When replacing the microSD card at the same time as the XSCF unit of a crossbar box in a SPARC M10 system, replace them during system-stopped/hot maintenance.
*5 To maintain the XSCF BB control cable and crossbar cable that connect the crossbar box to the chassis of the physical partition, the connected chassis must be powered off.
*6 Replacement is available only when all the chassis in the building block configuration are powered off.

Figure 3-5 System-Stopped/Hot Maintenance

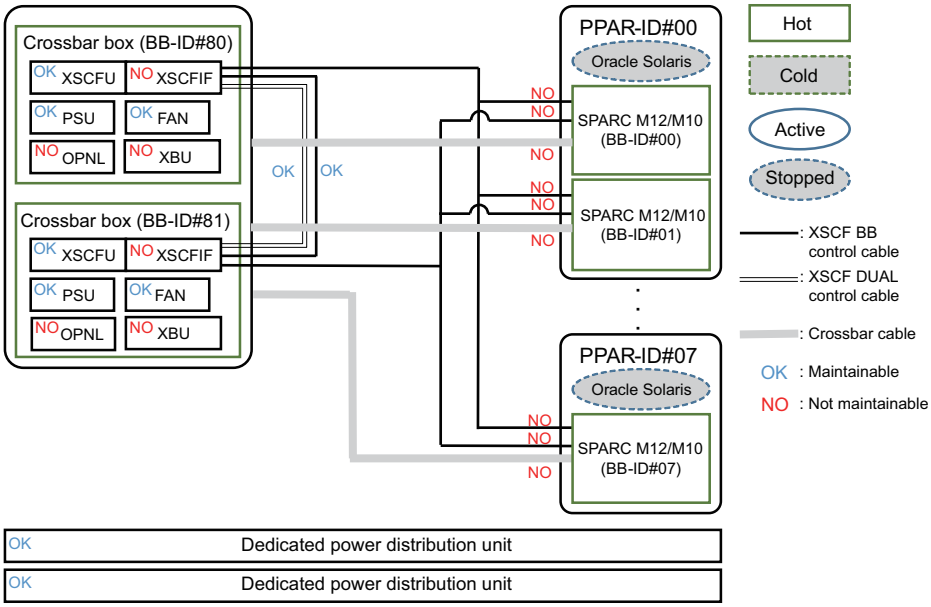

Figure 3-6 System-Stopped/Cold Maintenance

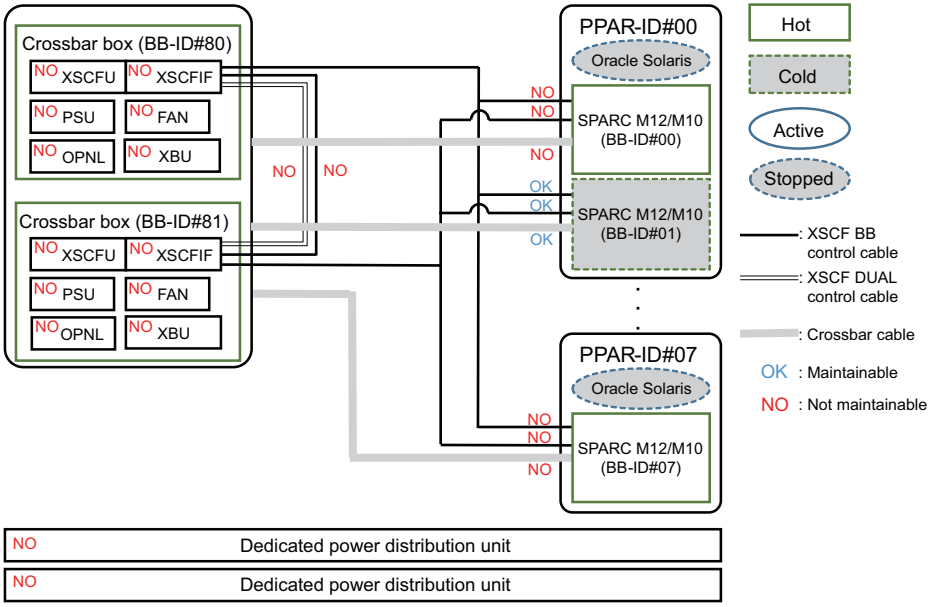

Figure 3-7 System-Stopped/Cold Maintenance (All Power-off)

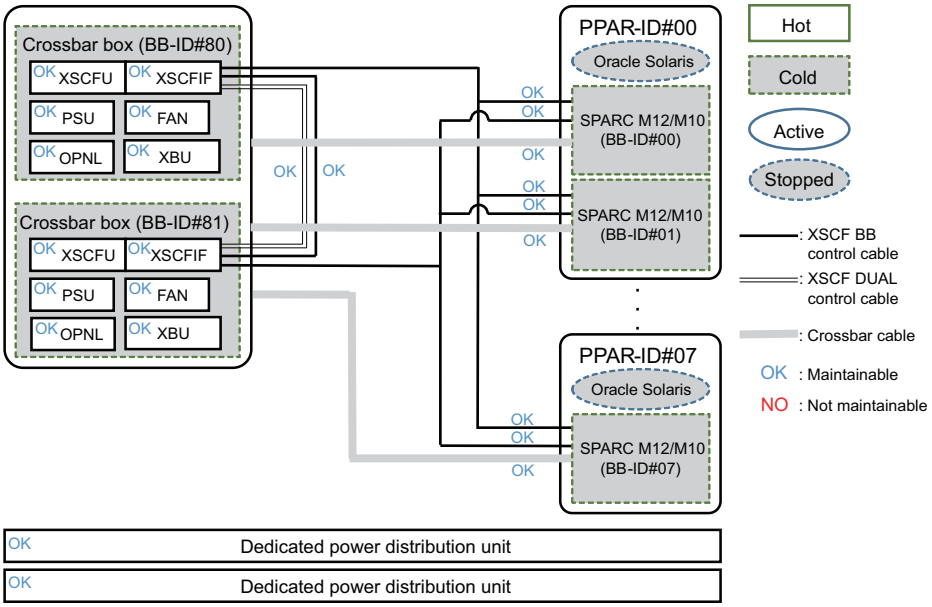

Chapter 4

Preparation and Precautions for Maintenance

This chapter describes preparations that must be completed prior to maintenance and the precautions for various work and maintenance.

- Confirming the System Configuration
- Troubleshooting
- Maintenance Precautions

4.1 Confirming the System Configuration

This section describes how to check the hardware and software configurations. After completing any maintenance, it is necessary to confirm that the system configuration is the same as that before starting the work. If an error occurs in the system, record the system configuration and the FRU state before starting maintenance. After maintenance, confirm that the system configuration is the same as that before maintenance.

4.1.1 Confirming the Hardware Configuration

Execute the showhardconf command to confirm the configuration and check the status of FRUs mounted in the crossbar box and the chassis of the physical partition. Before starting maintenance, confirm and record the hardware configuration of the crossbar box and the chassis of the physical partition.

1. **Log in to the XSCF shell.**
2. **Execute the showhardconf command to confirm the hardware configuration information.**

```
XSCF> showhardconf
```

The following information is displayed:

- Current configuration and status

- Number of mounted Field Replaceable Units (FRUs)
- Status of the unit in which a physical partition error or degradation occurred
- Information on the PCI expansion unit
- Name properties of the PCI Express (PCIe) card

4.1.2 Confirming the Software and Firmware Configurations

The software and firmware configurations and versions affect the operation of the system. To change the configuration or investigate a problem, check the latest state and check for any problems in the software.

Confirming the Software Configuration

Use Oracle Solaris commands to check the software configuration.
If you are logged in to the XSCF console, switch to the control domain console by executing the console command beforehand.
Table 4-1 lists the commands used for checking the software configuration.

Table 4-1 Commands for Checking the Software Configuration

Command	Description
pkg (Oracle Solaris 11) showrev (Oracle Solaris 10)	Displays Oracle Solaris correction information and the version.
ldm	Displays logical domain configuration information.

1. **For maintenance on physical partitions, log in to the control domain console of the physical partition where the FRU requiring maintenance is mounted.**
   For details on how to log in to the control domain console, see "8.3 Switching to the Control Domain Console From the XSCF Shell" in the *Fujitsu SPARC M12 and Fujitsu M10/SPARC M10 System Operation and Administration Guide*.
2. **Execute the pkg command to display Oracle Solaris correction information and the version.**
   - For Oracle Solaris 11, execute the pkg command.

```
# pkg info entire
          Name: entire
       Summary: entire incorporation including Support Repository Update
                (Oracle Solaris 11.1.12.5.0).
                                   * SRU version
```

   - For Oracle Solaris 10, execute the showrev command.

```
# showrev -p
```

To check the Oracle VM Server for SPARC version, execute the ldm command.

```
# ldm -V
Logical Domains Manager (v 3.1)
                         * Version of Oracle VM Server for SPARC
        Hypervisor control protocol v 1.9
        Using Hypervisor MD v 1.3
```

The following is examples of executing commands to check logical domain configuration information.

When checking from Oracle Solaris on the control domain

```
# ldm list-spconfig
factory-default (*1)
confirm_service_manual [current] (*2)
#
```

*1 factory-default configuration

*2 Currently running logical domain configuration

When checking from the XSCF shell

```
XSCF> showdomainconfig -p 0
PPAR-ID     :0
Booting config
 (Current)  :confirm_service_manual   (*1)
 (Next)     :confirm_service_manual
----------------------------------------------------------------------------
Index       :1
config_name :factory-default         (*2)
domains     :1
date_created:-
----------------------------------------------------------------------------
Index       :2
config_name :config_develop_env
domains     :3
date_created:'2016-05-24 19:40:55'
XSCF>
```

*1 Currently running logical domain configuration

*2 factory-default configuration

Confirming the Firmware Configuration

Check the XCP firmware version by using the version command, which is an XSCF shell command.

1. **Log in to the XSCF shell.**
2. **Execute the version command to confirm the firmware version information.**
   In the following example, "-c xcp" is entered to check the overall XCP version.

```
XSCF> version -c xcp
```

Check the firmware version of the PCI expansion unit by using the ioxadm command, which is an XSCF shell command.

1. **Log in to the XSCF shell.**
2. **Identify the mounting locations of the PCI expansion unit and link card.**

```
XSCF> ioxadm list
PCIBOX                      Link
PCIBOX#2007                 BB#00-PCI#7 (*1)
PCIBOX#2006                 BB#00-PCI#5
PCIBOX#2005                 BB#00-PCI#3
PCIBOX#2004                 BB#00-PCI#1
```

*1 Mounting locations of the PCI expansion unit and link card

3. **Execute the ioxadm command to check the firmware version information for the PCI expansion unit and link card.**

```
XSCF> ioxadm -v list
Location            Type    FW Ver  Serial Num      Part Num
 State
PCIBOX#2007         PCIBOX  -       PZ21242007
 On
PCIBOX#2007/PSU#0   PSU     -       FEJD1212000530  CA01022-0750-D/
 On
PCIBOX#2007/PSU#1   PSU     -       FEJD1212000529  CA01022-0750-D/
 On
PCIBOX#2007/IOB     IOBOARD 1330    PP123300E5      CA20365-B66X 008AG
 On (*1)
PCIBOX#2007/LINKBD  BOARD   -       PP141900V0      CA20365-B60X 008AD/7061035
 On
PCIBOX#2007/FANBP   FANBP   -       PP123203NT      CA20365-B68X 004AC
 On
BB#00-PCI#07        CARD    1330    PP133200UF      CA20365-B59X 008AD/7061040
 On (*2)
```

*1 Firmware version on the I/O board
*2 Firmware version on the link card

4.1.3 Confirming the FRU Information and Resource Information

Use XSCF shell commands to check the FRU information and resource information.

Table 4-2 lists the commands used for checking the FRU information and resource information. For details on each command, see the *Fujitsu SPARC M12 and Fujitsu M10/SPARC M10 XSCF Reference Manual* for the XCP firmware version being used.

Table 4-2 Commands for Checking FRU Information and Resource Information

Command	Description
showstatus	Displays the FRU status. Out of the FRUs in the system configuration, this command displays information on a faulty or degraded unit or FRU.
showboards	Displays information on a physical system board (PSB). Displays information on a physical system board that belongs to the specified physical partition and information on all the physical system boards that are mounted.
showpcl	Displays the configuration information for a physical partition (hardware resource information).
showfru	Displays the setting information for a device.

4.2 Troubleshooting

This section describes the troubleshooting procedure.

In the following cases, which are suspected failure conditions, use the troubleshooting flow to identify the failure location. For details on the troubleshooting flow, see "4.2.1 Determining the Causes of Failures."

- When the CHECK LED is on
- When an error message is displayed on the console
- When an error is displayed as a result of executing a command for checking the status
- When an error is displayed in the error log

4.2.1 Determining the Causes of Failures

This section describes the flow for determining the causes of failures.

Figure 4-1 Troubleshooting Flow

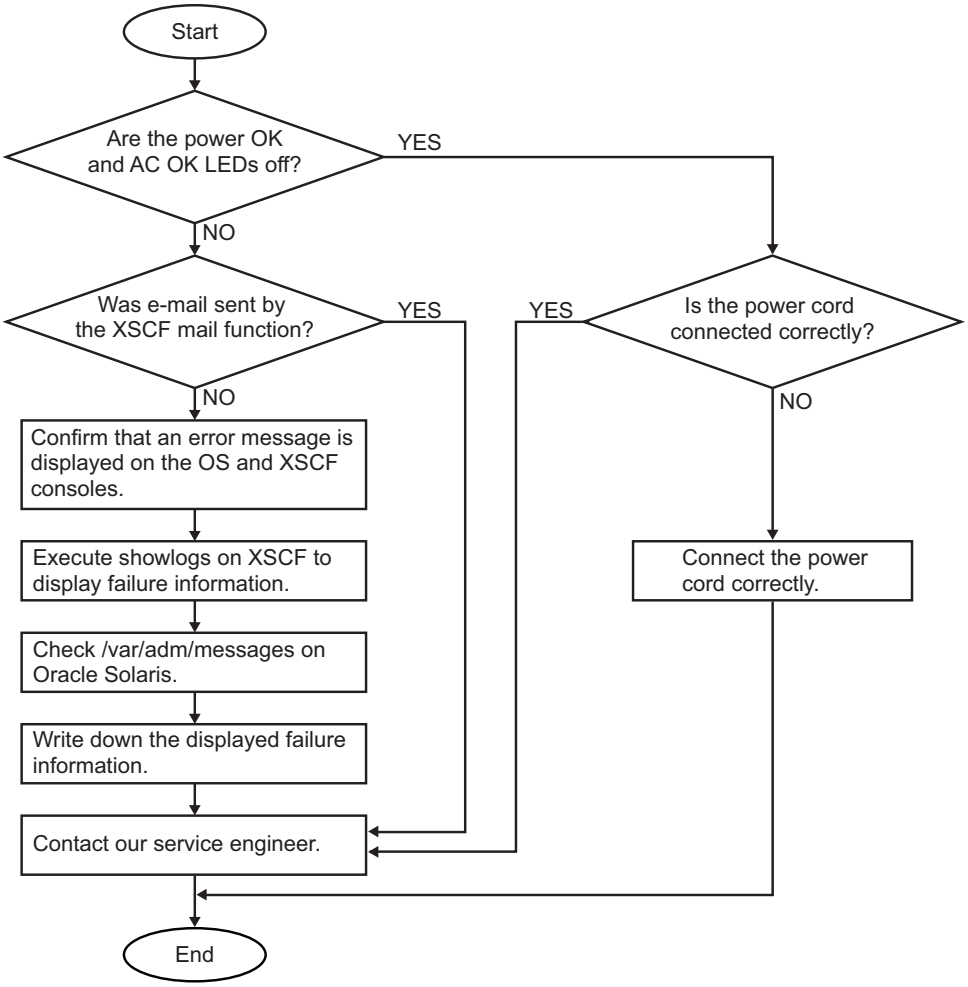

4.2.2 Identifying a Failure

This section describes how to identify a failure. Use the troubleshooting flow described in "4.2.1 Determining the Causes of Failures" to determine the appropriate way of checking for a failure.

Checking the LED Indications

Check the LEDs on the operation panel, rear panel, and each component to identify the FRU requiring maintenance. Check the status of a FRU from its LED before starting maintenance work on the FRU.

- Operation panel LEDs

You can determine the status of the system by checking the LEDs on the operation panel. For details, see "2.3.1 Operation Panel LEDs."

- Rear panel LED
  You can determine the status of the system by checking the CHECK LED on the rear panel of the chassis, which duplicates the CHECK LED on the operation panel. For details, see "2.3.2 LEDs on the Rear Panel (System Locator)."

- LED of each FRU
  If an error occurs in the hardware in the chassis, you can determine the location of the error by checking the LED of the FRU that incorporates the failed hardware. For details, see "2.3.3 LEDs on Each Component."

  Note that some FRUs, such as memory, do not have mounted LEDs. To check the status of a FRU that does not have an LED, execute XSCF shell commands such as the showhardconf command from the maintenance terminal. For details, see "Checking the FRU Status" below.

Checking Error Messages

Display error messages to check the log information and obtain an error overview. You can use either of the following two methods to check the error messages:

- Checking error log information using the XSCF shell
  For details, see "12.1 Checking a Log Saved by the XSCF" in the *Fujitsu SPARC M12 and Fujitsu M10/SPARC M10 System Operation and Administration Guide*.

- Checking messages with Oracle Solaris
  For details, see "12.2 Checking Warning and Notification Messages" in the *Fujitsu SPARC M12 and Fujitsu M10/SPARC M10 System Operation and Administration Guide*.

Checking the FRU Status

Execute XSCF firmware commands to determine the system hardware configuration and the status of each FRU.

- showhardconf command

Execute the showhardconf command to check the information on the FRU list.

1. **Log in to the XSCF shell.**
2. **Execute the showhardconf command to check the FRU list.**
   A faulty FRU is indicated by an asterisk (*) at the beginning of the line.

   The following example shows execution on the SPARC M10-4S.

```
XSCF> showhardconf
SPARC M10-4S;
    + Serial:2081230011; Operator_Panel_Switch:Locked;
    + System_Power:On; System_Phase:Cabinet Power On;
      Partition#0 PPAR_Status:Powered Off;
      Partition#1 PPAR_Status:Initialization Phase;
```

```
    BB#00 Status:Normal; Role:Slave; Ver:2003h; Serial:2081231002;
        + FRU-Part-Number:CA07361-D202 A1                        ;
        + Power_Supply_System:Single;
        + Memory_Size:256 GB;
------------------------Omitted------------------------
    XBBOX#80 Status:Normal; Role:Master; Ver:0101h; Serial:7867000297;
        + FRU-Part-Number:CA07361-D011 A0 /NOT-FIXD-01            ;
        + Power_Supply_System:Single;
        XBU#0 Status:Normal; Serial:PP0629L068
            + FRU-Part-Number:CA20393-B50X A2 ;
            + Type: A ;
*           CBL#L0 Status:Degraded;
                + FRU-Part-Number:2123628-2 ; Ver:3820h;
                    + Type:Optic; Length: 3;
                + FRU-Part-Number:2123628-2 ; Ver:3820h;
                    + Type:Optic; Length: 3;
------------------------Omitted----------------------
```

- showstatus command

Execute the showstatus command to check the FRU status.

1. **Log in to the XSCF shell.**
2. **Execute the showstatus command to check the status.**
   A faulty FRU is indicated by an asterisk (*) at the beginning of the line.

```
XSCF> showstatus
    XBBOX#80;
*       PSU#0 Status:Faulted;
```

The FRU status is displayed after the "Status:" string.
Table 4-3 describes the FRU status.

Table 4-3 FRU Status

Display	Description
Normal	The unit is in the normal state.
Faulted	The unit is faulty and is not operating.
Degraded	A part of the unit has failed or degraded, but the unit is running.
Deconfigured	Due to the failure or degradation of another unit, the target unit and components of its underlying layer has been degraded, though there is no problem with them.
Maintenance	Maintenance is being performed. The replacefru, addfru, or initbb command is being executed.

Checking Log Information

Execute the showlogs command to check error log information.

1. **Log in to the XSCF shell.**
2. **Execute the showlogs command to check the log information.**
   The log information is listed in order of date, with the oldest appearing first.

   The following example shows that an Alarm status occurred in PSU#1 at 12:45:31 on Oct 20, and the Alarm status changed to a Warning status at 15:45:31 on the same day.

```
XSCF> showlogs error
Date: Oct 20 12:45:31 JST 2012
    Code: 00112233-445566778899aabbcc-8899aabbcceeff0011223344
    Status: Alarm                 Occurred: Oct 20 12:45:31.000 JST 2012
    FRU: /PSU#1
    Msg: ACFAIL occurred (ACS=3)(FEP type = A1)
Date: Oct 20 15:45:31 JST 2012
    Code: 00112233-445566778899aabbcc-8899aabbcceeff0011223344
    Status: Warning               Occurred: Oct 20 15:45:31.000 JST 2012
    FRU: /PSU#1
    Msg: ACFAIL occurred (ACS=3)(FEP type = A1)
```

Table 4-4 shows what log information each operand of the showlogs command can display.

Table 4-4 showlogs Command Operands and the Logs to be Displayed

Operand	Description
error	Lists the error log.
event	Lists the event log.
power	Lists the power log.
env	Lists the temperature history.
monitor	Lists the monitoring message log.
console	Lists the console message log.
ipl	Lists the IPL message log.
panic	Lists the panic message log.

Checking the Messages Output by the Predictive Self-Repairing Tool

Check the messages output from the Oracle Solaris Fault Manager predictive self-repairing tool, running on Oracle Solaris. Oracle Solaris Fault Manager has the following functions:

- Receives telemetry information about errors.
- Performs troubleshooting.
- Disables the FRUs that have experienced errors.
- Turns on the LED of a FRU that has experienced an error and displays the details in a system console message.

Table 4-5 lists typical messages that are generated if an error occurs. These messages indicate that the fault has already been diagnosed. If there are corrective actions that can be taken by the system, they have already been taken. In addition, if the system is running, corrective actions continue to be applied.
Messages are displayed on the console and are recorded in the /var/adm/messages file.

Table 4-5 Predictive Self-Repairing Messages

Output Displayed	Description
EVENT-TIME: Thu Apr 19 10:48:39 JST 2012	EVENT-TIME: Time stamp of the diagnosis
PLATFORM: ORCL,SPARC64-X, CSN: PP115300MX, HOSTNAME: 4S-LGA12-D0	PLATFORM: Description of the chassis in which the error occurred
SOURCE: eft, REV: 1.16	SOURCE: Information regarding the diagnosis engine used to identify the error
EVENT-ID: fcbb42a5-47c3-c9c5-f0b0-f782d69afb01	EVENT-ID: Universally unique event ID for this error
DESC: The diagnosis engine encountered telemetry from the listed devices for which it was unable to perform a diagnosis - ereport.io.pciex.rc.epkt@chassis0/cpuboard0/chip0/hostbridge0/pciexrc0 class and path are incompatible.	DESC: Basic description of the error
AUTO-RESPONSE: Error reports have been logged for examination.	AUTO-RESPONSE: What the system has done (if anything) to alleviate any subsequent problems
IMPACT: Automated diagnosis and response for these events will not occur.	IMPACT: Description of the assumed impact of the failure
REC-ACTION: Use 'fmadm faulty' to provide a more detailed view of this event. Use 'fmdump -eV' to view the unexpected telemetry. Please refer to the associated reference document at http://support.oracle.com/msg/SUNOS-8000-J0 for the latest service procedures and policies regarding this diagnosis.	REC-ACTION: Brief description of the corrective action the system administrator should apply

Identifying the Location of the Chassis Requiring Maintenance

Execute the setlocator command to identify the location of the chassis requiring maintenance by causing the CHECK LED on the operation panel and the CHECK LED (locator) on the rear panel to blink.

1. **Log in to the XSCF shell.**
2. **Execute the setlocator command to blink the CHECK LED of the chassis requiring maintenance, and determine its location.**

The CHECK LEDs on the operation and rear panels blink.

The chassis requiring maintenance in the following execution example is the master chassis.

```
XSCF> setlocator blink
```

If the chassis requiring maintenance is not the master chassis, set "setlocator -b *bb_id* blink".

For details on where to find and how to check the CHECK LEDs, see "2.3 Checking the LED Indications."

4.2.3 Downloading Error Log Information

This section describes the operations for downloading error log information.
To download error log information, use the XSCF log fetch function. The XSCF unit has a maintenance USB port so that maintenance information such as error logs can be obtained easily. (The port is marked as MAINTENANCE on the rear panel.) For details, see "12.1.15 Saving a Log to a File With Snapshot" and "12.1.16 Saving a Log to a Local USB Device" in the *Fujitsu SPARC M12 and Fujitsu M10/SPARC M10 System Operation and Administration Guide*.

In the following example, detailed information on the error logs of all chassis in the system in a building block configuration is downloaded to the USB memory connected to the USB port.

```
XSCF> snapshot -d usb0 -L F -r -a -v
Testing writability of USB device....SUCCESS
About to remove all files from device 'usb0'. Continue? [Y|N] : y
BB#00: start to execute snapshot
BB#01: start to execute snapshot
.
.
Collecting data into /media/usb_msd/<hostname>_<ipaddress>_<date>.zip
Data collection complete.
```

4.3 Maintenance Precautions

This section describes precautions for maintenance on the crossbar box.
To perform maintenance on the chassis of the physical partition, see "Chapter 7 FRU Maintenance Precautions" in the *Fujitsu SPARC M12-2/M12-2S Service Manual* or "4.3 Maintenance Precautions" in the *Fujitsu M10-4/Fujitsu M10-4S/SPARC M10-4/SPARC M10-4S Service Manual*.

4.3.1 Precautions for Replacement

This section describes the precautions for replacement.

Precautions for XSCF Unit and XSCF Interface Unit Replacement

- Different XSCF units are used for the SPARC M12-2S system and the SPARC M10-4S system. (See Figure 2-2.)
- Before replacing an XSCF unit, execute the dumpconfig command to save the system setting information. When an XSCF unit is replaced, the CPU Activation setting information and CPU Activation keys may be deleted. To restore the CPU Activation setting information and CPU Activation keys that were saved with the dumpconfig command, execute the restoreconfig command.
  For details, see "10.10 Saving/Restoring XSCF Settings Information" in the *Fujitsu SPARC M12 and Fujitsu M10/SPARC M10 System Operation and Administration Guide*.
- When an XSCF unit is replaced, the system will start with the version of the firmware applied to the replacement XSCF unit. If this firmware version is different from that before replacement, the firmware is automatically updated to the pre-replacement version. However, this update takes time. To shorten the XSCF unit replacement work time, we recommend switching the microSD card mounted in the replaced XSCF unit with the card in the replacement XSCF unit. Using the microSD card from the replaced XSCF unit eliminates the need to update the firmware to the pre-replacement version.
- When replacing the microSD card at the same time as the XSCF unit of a crossbar box in a SPARC M10 system, do not replace them during system-stopped/cold maintenance. Doing so may put the Oracle Solaris clock greatly out of sync at system startup.
  Replace them during system-stopped/hot maintenance.
- If you replace the microSD card along with the XSCF unit, dispose of the microSD card mounted on the old XSCF unit by appropriate means such as cutting it with cutting pliers. The old microSD card stores the user information, IP address, and other information set in the XSCF firmware.
- If you use the replacefru command to replace the XSCF unit, a completion message appears when the incorporation of the XSCF unit into the crossbar box completes. However, the activation of the replaced XSCF unit firmware may not have completed by then. When you perform maintenance work on the XSCF unit, perform the next operation ten or more minutes after the incorporation completion message appears.
- Do not replace the XSCF unit and the XSCF interface unit at the same time during system-stopped/cold maintenance. If you replace both the XSCF unit and the XSCF interface unit at the same time, the system will fail to operate normally. Replace the XSCF unit in the hot state and then replace the XSCF interface unit in the cold state.
- Do not mount and use any of the following microSD cards in the XSCF unit in another chassis:

- the one currently mounted in the crossbar box, or
- one that was once used as a maintenance part

This is because these microSD cards store device identification information.

- Do not mount and use any of the following XSCF interface units in another chassis:
  - the one currently mounted in the crossbar box, or
  - one that was once used as a maintenance part

  This is because these XSCF interface units store device identification information.

Precautions for Crossbar Cable Replacement

Caution - Do not forcibly bend the crossbar cables. A crossbar cable may be damaged if forcibly bent. Ensure that the bending radius of the crossbar cable is no less than 35 mm (1.4 in.).

- Replace the crossbar cables in pairs.
- Do not place heavy objects on the crossbar cables.

Precautions for Power Supply Unit Replacement

Caution - Do not forcibly push the power supply unit into its slot. If excessive force is applied, other components or the chassis may be damaged.

- There are two power supply units. Thus, the system can continue operating even if one of the units fails. However, do not operate the system for an extended period while one unit has failed.
- When replacing multiple power supply units, replace one unit at a time. If redundancy of the power supply unit cannot be assured, system-stopped/cold maintenance must be performed.

Precautions for Fan Unit Replacement

- The cooling fans have a redundant configuration. Thus, the system can continue operating even if one of the fans in the fan units experiences a failure. Avoid operating the system with a faulty fan for an extended period and replace the fan unit containing the failed fan as soon as possible.
- When replacing multiple fan units, replace one unit at a time. If a redundant configuration cannot be assured, perform system-stopped maintenance.

Precautions for Operation Panel Replacement

- To replace the operation panel, set the BB-ID of the replacement operation panel to the same value as that before replacement.

- The crossbar box is connected to the dual PDUs with power cords. Thus, the system can continue to operate even if one of the PDUs fails. However, do not operate the system for an extended period while one unit has failed.
- When replacing multiple dedicated power distribution units, replace one unit at a time. If redundancy of the dedicated power distribution units cannot be assured, system-stopped/cold maintenance must be performed.

4.3.2 Precautions for Expansion

The following describes precautions for expansion.

- The only cable that can be used to connect a crossbar box and the chassis of a physical partition is a crossbar cable (optical).
- The chassis of physical partitions can be expanded up to 8 for the 2-crossbar-box configuration, and up to 16 for the 4-crossbar-box configuration.
- Only system-stopped/cold maintenance is enabled as the maintenance type for expansion from the two-crossbar-box configuration to the four-crossbar-box configuration.
- The crossbar box connection rule changes if crossbar boxes are expanded from the two-crossbar-box configuration to the four-crossbar-box configuration. When expanding the crossbar boxes, see "Appendix B Cable Connection Information on Building Block Configurations" in the *Fujitsu SPARC M12-2S Installation Guide* or "Appendix B Cable Connection Information on Building Block Configurations" in the *Fujitsu M10-4S/SPARC M10-4S Installation Guide* to connect the crossbar cables.
- When expanding the crossbar boxes, see "8.2 Preparation for Expansion" and "9.2 Preparation for Reduction" in the *Fujitsu SPARC M12-2S Installation Guide* or "Chapter 8 Before Expanding/Reducing a System with a Building Block Configuration" in the *Fujitsu M10-4S/SPARC M10-4S Installation Guide*.

4.3.3 Precautions for Reduction

The following describes precautions for reduction.

- Use the initbb command to reduce the chassis of physical partitions and the crossbar boxes when reducing crossbar boxes from the four-crossbar box configuration to the two-crossbar box configuration. If you reduce them without using the initbb command, the removed crossbar boxes and the removed chassis of the physical partitions cannot be used.
- When reducing the crossbar boxes, see "8.2 Preparation for Expansion" and "9.2 Preparation for Reduction" in the *Fujitsu SPARC M12-2S Installation Guide* or "Chapter 8 Before Expanding/Reducing a System with a Building Block Configuration" in the *Fujitsu M10-4S/SPARC M10-4S Installation Guide*.

Chapter 5

Enabling the Removal of a FRU Requiring Maintenance

This chapter describes the preparations that must be completed before you can physically remove a FRU.

- Preparing Tools Required for Maintenance
- Releasing the Chassis for a Connecting Physical Partition From the System
- Saving XSCF Setting Information
- Releasing FRUs of the Crossbar Box From the System With the replacefru Command
- Accessing a FRU

Caution - Do not operate a target Field Replaceable Unit (FRU) while OpenBoot PROM is running (the ok prompt is displayed). After powering off the physical partition or starting Oracle Solaris, operate the target FRU.

5.1 Preparing Tools Required for Maintenance

This section describes the tools required for maintenance. Table 5-1 lists the tools required for maintenance on a Field Replaceable Unit (FRU).

Table 5-1 Maintenance Tools

Item	Use
Phillips screwdriver (No. 2)	Removing or replacing screws
Flathead screwdriver (small)	Removing or replacing screws
Torx screwdriver (T10)	Removing or replacing screws
Wrist strap	For static grounding
ESD mat	For static grounding

5.2 Releasing the Chassis for a Connecting Physical Partition From the System

To perform maintenance on the FRU connecting a crossbar box and the chassis of a physical partition, that chassis must be released from the system with the deleteboard command. Perform this operation from the XSCF shell of the crossbar box. See "Chapter 3 Understanding the Types of Maintenance" in the *Fujitsu SPARC M12-2/M12-2S Service Manual* or "Chapter 7 Maintenance Flow" in the *Fujitsu M10-4/Fujitsu M10-4S/SPARC M10-4/SPARC M10-4S Service Manual* to perform the operations necessary to configure the physical partition and logical domains.

5.2.1 Checking the Operating Condition of the Physical Partition or Logical Domain

In the following execution example, the operating condition of the physical partition and logical domain is checked from the firmware.

1. **Log in to the XSCF shell.**
2. **Confirm that you are logged in to the master XSCF.**
   In the following example, the showbbstatus command checks it.

```
XSCF> showbbstatus
XB-Box#80 (Master) (*1)
```

*1 If Standby is displayed, try logging into the master XSCF again.

3. **Execute the showpparstatus command to confirm the operating condition of the physical partition.**
   In the following example, [PPAR Status] of PPAR-ID 00 displays "Running", which indicates that the physical partition is operating.

```
XSCF> showpparstatus -p 0
PPAR-ID        PPAR Status
00             Running
```

4. **Execute the showdomainstatus command to confirm the operating condition of the logical domain.**
   In the following example, [Status] of the logical domains of PPAR-ID 00 displays "Solaris running," which indicates that Oracle Solaris is operating.

```
XSCF> showdomainstatus -p 0
Logical Domain Name   Status
primary               Solaris running
guest0                Solaris running
guest1                Solaris running
iodom0                Solaris running
iodom1                Solaris running
sdiodomain            Solaris running
sr-iodomain           Solaris running
```

5.2.2 Switching the Mode Switch to Service Mode

This section describes the procedure for enabling maintenance on a system having a building block configuration with the crossbar box connected.

Note - The mode switch on the operation panel does not need to be changed in active maintenance.

---

1. **Switch the mode switches for the master chassis and those chassis whose XSCFs are in the standby state to Service mode.**
   The BB-ID of the chassis with the mode switch to be switched is "80" and "81" in a building block configuration with the crossbar box connected.

5.2.3 Releasing the Chassis for a Connecting Physical Partition From a Physical Partition

This section describes the procedure for releasing the chassis of a physical partition by using dynamic reconfiguration of a physical partition (PPAR DR).

Note - For the versions of XCP and Oracle VM Server for SPARC/SRU that support dynamic reconfiguration of a physical partition (PPAR DR), see the latest *Product Notes*.

Note - To use the dynamic reconfiguration (PPAR DR) function for physical partitions, you must configure the logical domains in advance as described in "2.5 Dynamic Reconfiguration Conditions and Settings" in the *Fujitsu SPARC M12 and Fujitsu M10/SPARC M10 Domain Configuration Guide*.

---

1. **Confirm that no logical domain is using an I/O device in the chassis for the connecting physical partition.**
   For details, see "9.4 Enabling the Removal of Hardware" in the *Fujitsu SPARC M12-2/M12-2S Service Manual* or "5.3 Checking the Operating Condition and Resource Usage Status" and "5.4.1 Releasing the assignment of I/O devices" in the *Fujitsu M10-4/Fujitsu M10-4S/SPARC M10-4/SPARC M10-4S Service Manual*.
2. **Log in to the XSCF shell.**

3. **If the chassis for the connecting physical partition is operating as the master chassis, execute the switchscf command to switch the master XSCF to the standby XSCF.**
   Enter "y" in response to the confirmation message.

   If the chassis for the connecting physical partition is a slave XSCF, go to step 5.

```
XSCF> switchscf -t Master
The XSCF unit switch between the Master and Standby states.
Continue? [y|n] :y
```

4. **Log in to the XSCF again.**
5. **Execute the showboards command to check the status of the chassis for the connecting physical partition.**
   The BB-ID of the chassis for the connecting physical partition is displayed as a system board (PSB) number.

   In the following example, the [Fault] column displays "Degraded" for PSB 00-0, indicating that the system board is operating with some faulty parts.

```
XSCF> showboards -va
PSB  PPAR-ID(LSB) Assignment  Pwr  Conn Conf Test    Fault
---- ------------ ----------- ---- ---- ---- ------- --------
00-0 00(00)       Assigned    y    y    y    Passed  Degraded
01-0 00(01)       Assigned    y    y    y    Passed  Normal
02-0 00(02)       Assigned    y    y    y    Passed  Normal
03-0 00(03)       Assigned    y    y    y    Passed  Normal
```

6. **Execute the deleteboard command with the -c disconnect option specified to release the chassis for the connecting physical partition from a physical partition.**
   If any of the CPU cores, memory, and PCIe root complex resources were not manually released beforehand, be sure to specify the -m unbind=resource option. With this option specified, the command automatically deletes the resources and then releases the system board.

Note - The -m unbind=resource option of the deleteboard command is supported by Oracle VM Server for SPARC 3.2 or later.

   In the following example, PSB 00-0 is released from the physical partition.

```
XSCF> deleteboard -c disconnect 00-0
```

7. **Execute the showresult command to check the end status of the deleteboard command that was just executed.**
   The following example shows that "0" was returned as the end status because the execution of the deleteboard command completed successfully.

```
XSCF> showresult
0
```

8. **Execute the showboards command to confirm that the chassis for the connecting physical partition has been released from the physical partition.**
   In the following example, the [Pwr], [Conn], and [Conf] columns all display "n" for PSB 00-0, indicating that PSB 00-0 has been released.

```
XSCF> showboards -a
PSB  PPAR-ID(LSB) Assignment  Pwr  Conn Conf Test    Fault
---- ------------ ----------- ---- ---- ---- ------- --------
00-0 00(00)       Assigned    n    n    n    Passed  Degraded
01-0 00(01)       Assigned    y    y    y    Passed  Normal
02-0 00(02)       Assigned    y    y    y    Passed  Normal
03-0 00(03)       Assigned    y    y    y    Passed  Normal
```

9. **Execute the ldm list-domain command from the control domain console of the physical partition to check for any change in the operating condition of the logical domain after the deletion of the system board.**

5.2.4 Powering Off a Connecting Physical Partition

This section describes the procedure for powering off a connecting physical partition. This applies if the system has a building block configuration and is operating in multiple physical partitions.

Note - Before stopping the system, inform the users that the system will be stopped.

Note - When a physical partition is stopped by operating the XSCF command or the operation panel, all the logical domains on the physical partition are stopped. Stop applications as required.

---

1. **Log in to the XSCF shell.**
2. **Execute the showpparstatus command to confirm the operating condition of the physical partition.**
   In the following example, [PPAR STATUS] displays "Running" for PPAR-ID 00, indicating that the physical partition is operating.

```
XSCF> showpparstatus -p 0
PPAR-ID        PPAR Status
00             Running
```

3. **Execute the showdomainstatus command to confirm the operating condition of the logical domain.**
   In the following example, [Status] of the logical domain displays "Solaris running", which indicates that Oracle Solaris is operating.

```
XSCF>  showdomainstatus -p 0
Logical Domain Name   Status
primary               Solaris running
4S-159-D0-G0          Solaris running
4S-159-D0-G1          Solaris running
4S-159-D0-G2          Solaris running
```

4. **Execute the showboards command to check the status of the chassis for the connecting physical partition.**
   The BB-ID of the chassis for the connecting physical partition is displayed as a system board (PSB) number.

   In the following example, we can see that [PPAR-ID] of PSB 00-0 is "00".

```
XSCF> showboards -a
PSB  PPAR-ID(LSB) Assignment  Pwr  Conn Conf Test    Fault
---- ------------ ----------- ---- ---- ---- ------- --------
00-0 00(00)       Assigned    y    y    y    Passed  Normal
01-0 00(01)       Assigned    y    y    y    Passed  Normal
02-0 00(02)       Assigned    y    y    y    Passed  Normal
03-0 00(03)       Assigned    y    y    y    Passed  Normal
```

5. **Execute the poweroff command to stop all the logical domains on the connecting physical partition.**
   Enter "y" in response to the confirmation message.

```
XSCF> poweroff -p 0
PPAR-IDs to power off:00
Continue? [y|n] :y
00 : Powering off

*Note*
 This command only issues the instruction to power-off.
 The result of the instruction can be checked by the "showpparprogress".
```

6. **Execute the showpparstatus command to confirm that the power to the physical partition is turned off.**
   In the following example, [PPAR Status] of PPAR-ID 00 displays "Powered Off", which indicates that the power to the physical partition has been turned off.

```
XSCF> showpparstatus -p 0
PPAR-ID        PPAR Status
00             Powered Off
```

5.2.5 Stopping the Entire System

This section describes the procedure for stopping the entire system. To undertake

system-stopped maintenance, power off all the physical partitions to stop the entire system before physically removing any FRU.
Stop the system in either of the following ways.

a) Stopping the system with the XSCF command

b) Stopping the system from the operation panel

Note - Before stopping the system, inform the users that the system will be stopped.

Note - When a physical partition is stopped by operating the XSCF command or the operation panel, all the logical domains on the physical partition are stopped. Stop applications as required.

---

1. **Stop the entire system.**
   For details, see "a) Stopping the system with the XSCF command" or "b) Stopping the system from the operation panel."

2. **Execute the showpparstatus command to confirm that the power to the physical partition is turned off.**
   In the following example, [PPAR Status] displays "Powered Off" for PPAR-IDs 00, 01, and 02, indicating that the power to all the physical partitions has been turned off.

```
XSCF> showpparstatus -a
PPAR-ID         PPAR Status
00              Powered Off
01              Powered Off
02              Powered Off
```

3. **Execute the showdomainstatus command to confirm the operating condition of the logical domain.**
   In the following example, [Status] of the logical domain displays "Solaris powering down", which indicates that Oracle Solaris is shutting down.

```
XSCF>  showdomainstatus -p 0
Logical Domain Name   Status
primary               Solaris powering down
4S-159-D0-G0          Solaris powering down
4S-159-D0-G1          Solaris powering down
4S-159-D0-G2          Solaris powering down
```

a) Stopping the system with the XSCF command

1. **Confirm that the mode switch on the operation panel is in Service mode.**
2. **Log in to the XSCF shell.**
3. **Execute the poweroff command.**
   Enter "y" in response to the confirmation message.

In the following example, the displayed status of PPAR-IDs 00, 01, and 02 is "Powering off," so you can see that the power-off instruction for the physical partition completed successfully.

```
XSCF> poweroff -a
PPAR-IDs to power off:00,01,02
Continue? [y|n] :y
00 : Powering off
01 : Powering off
02 : Powering off
```

The following processes are performed.

- Oracle Solaris is completely shut down.
- The system stops and enters the POWERON READY state (The XSCF is running).

For details, see "6.2.3 Stopping the Whole System" in the *Fujitsu SPARC M12 and Fujitsu M10/SPARC M10 System Operation and Administration Guide*.

Note - The order in which guest domains shut down depends on the shut-down group setting of Oracle VM Server for SPARC.

---

4. **Check that the POWER LED on the operation panel is off.**

Note - For a building block configuration, check the POWER LEDs on all the chassis that make up the system.

---

5. **Execute the showpparstatus command to confirm that the power to the physical partition is turned off.**
   In the following example, [PPAR Status] displays "Powered Off" for PPAR-IDs 00, 01, and 02, indicating that the power to all the physical partitions has been turned off.

```
XSCF> showpparstatus -a
PPAR-ID PPAR Status
00 Powered Off
01 Powered Off
02 Powered Off
```

6. **Execute the showdomainstatus command to check the operating condition of the logical domain.**
   In the following example, [Status] displays "Solaris powering down" for the logical domains, indicating that Oracle Solaris is shutting down.

```
XSCF> showdomainstatus -p 0
Logical Domain Name Status
primary Solaris powering down
4S-159-D0-G0 Solaris powering down
4S-159-D0-G1 Solaris powering down
```

```
4S-159-D0-G2 Solaris powering down
```

b) Stopping the system from the operation panel

1. **Confirm that the mode switch on the operation panel is in Service mode.**
2. **Press the power switch on the operation panel for 4 seconds or more.**
   For details, see "2.2.2 Control Function of the Operation Panel."

Note - Press the POWER switch on the master chassis. The power switches of the other chassis are disabled.

---

3. **Check that the POWER LED on the operation panel is off.**

Note - For a building block configuration, check the POWER LEDs on all the chassis that make up the system.

---

4. **Execute the showpparstatus command to confirm that the power to the physical partition is turned off.**
   In the following example, [PPAR Status] displays "Powered Off" for PPAR-IDs 00, 01, and 02, indicating that the power to all the physical partitions has been turned off.

```
XSCF> showpparstatus -a
PPAR-ID PPAR Status
00 Powered Off
01 Powered Off
02 Powered Off
```

5. **Execute the showdomainstatus command to check the operating condition of the logical domain.**
   In the following example, [Status] displays "Solaris powering down" for the logical domains, indicating that Oracle Solaris is shutting down.

```
XSCF> showdomainstatus -p 0
Logical Domain Name Status
primary Solaris powering down
4S-159-D0-G0 Solaris powering down
4S-159-D0-G1 Solaris powering down
4S-159-D0-G2 Solaris powering down
```

5.3 Saving XSCF Setting Information

This section describes how to save the following XSCF setting information:

- Network configuration information, advanced setting information, guest domain configuration information, etc.
- CPU Activation key, CPU Activation assignment, etc.
- PPAR operation mode, time zone setting, user information, etc.

The following example shows the command for saving the XSCF setting information on the USB device. For details, see "10.10 Saving/Restoring XSCF Settings Information" in the *Fujitsu SPARC M12 and Fujitsu M10/SPARC M10 System Operation and Administration Guide*.

```
XSCF> dumpconfig -v -V file:///media/usb_msd/system.cfg
```

5.4 Releasing FRUs of the Crossbar Box From the System With the replacefru Command

The FRUs subject to the operation described here are as follows:

- XSCF unit of the crossbar box
- Power supply unit of the crossbar box
- Fan unit of the crossbar box
- Chassis of the SPARC M12-2S or the SPARC M10-4S

5.4.1 Releasing FRUs of the Crossbar Box With the replacefru Command

This section describes the procedure for releasing FRUs of the crossbar box, using the XSCF unit of the crossbar box as an example.

For maintenance on the crossbar box of the master XSCF, execute the switchscf command to change the crossbar box to the standby state, and then start maintenance.

1. **Log in to the XSCF shell.**
2. **When the crossbar box requiring maintenance is operating as the master XSCF, execute the switchscf command to change the state to the standby state, and then log in to the XSCF shell again.**

When the crossbar box requiring maintenance is in the standby state or operating as a slave XSCF, this step is not necessary.

3. **Execute the replacefru command to display the maintenance menu.**

```
XSCF> replacefru
```

4. **Select the model requiring maintenance by specifying it with a numeric key.**
Specify the chassis where the FRU requiring maintenance is mounted. In this example, since maintenance is performed on the FRU of the crossbar box, "2" is entered.

```
------------------------------------------------------------------------------
Maintenance/Replacement Menu
Please select a type of model which has FRU to be replaced.

1. BB          (4s Building Block Model)
2. XBBOX       (XB-BOX Model)
------------------------------------------------------------------------------
Select [1,2|c:cancel] :2
```

5. **Select the chassis requiring maintenance by specifying it with a numeric key.**
Select the chassis that indicates an abnormal status. In this example, since maintenance is performed on the XSCF unit mounted on XBBOX#80, "1" is entered.

```
------------------------------------------------------------------------------
Maintenance/Replacement Menu
Please select the chassis including replaced FRU.

No. FRU                 Status
--- ------------------- --------------
 1  /XBBOX#80           Degraded
 2  /XBBOX#81           Normal
------------------------------------------------------------------------------
Select [1-2|c:cancel] :1
```

6. **Select the FRU requiring maintenance by specifying it with a numeric key.**
In the following example, since maintenance is performed on the XSCF unit, "3" is entered.

```
------------------------------------------------------------------------------
Maintenance/Replacement Menu
Please select a type of FRU to be replaced.

1. FAN        (Fan Unit)
2. PSU        (Power Supply Unit)
3. XSCFU      (Extended System Control Facility Unit)
------------------------------------------------------------------------------
Select [1-3|c:cancel] :3
```

7. **Select the part requiring maintenance by specifying it with a numeric key.**
For the FRU selected in step 6, each part status is shown. In this example, since the XSCF unit on XBBOX#80 requires maintenance, "1" is entered.

```
------------------------------------------------------------------------------
Maintenance/Replacement Menu
Please select a FRU to be replaced.

No. FRU                  Status
--- ------------------- --------------
 1  /XBBOX#80/XSCFU      Degraded
------------------------------------------------------------------------------
Select [1|b:back] :1
```

8. **After confirming that the selected FRU is displayed, enter "r".**

```
You are about to replace XBBOX#80/XSCFU.
Do you want to continue?[r:replace|c:cancel] :r
```

9. **Confirm that the CHECK LEDs on the operation panel of the chassis requiring maintenance and the system locator are blinking and the CHECK LED on the FRU requiring maintenance is on or blinking.**
For details on the locations of LEDs, see "2.3.2 LEDs on the Rear Panel (System Locator)" and "2.3.3 LEDs on Each Component."

```
Please execute the following steps:
1) Confirm the XSCF STANDBY LED of XBBOX#80/XSCFU is not lit.
2) Remove XBBOX#80/XSCFU.
3) After installing the exchanged device, please select [f:finish] :
```

Then, remove the FRU requiring maintenance. For the procedure for removing a FRU, see the maintenance procedure on FRUs in Chapter 8 and later. Do not enter "f" until you complete the maintenance work.

After replacing the FRU requiring maintenance to the crossbar box, enter "f" to start restoring the crossbar box. For details, see "6.2.1 Restoring the Crossbar Box With the replacefru Command."

5.4.2 Releasing FRUs in the Chassis of the Physical Partition

This section describes the procedure for releasing FRUs in the chassis of the physical partition, in an example where the physical partition is connected to a crossbar box.

Before releasing FRUs in the chassis of the physical partition, enable maintenance on the FRUs by stopping Oracle Solaris on the physical partition, which this chassis belongs to, or releasing the connecting chassis from the physical partition. For details, see "3.4 Types of Maintenance Applicable to the SPARC M12-2S (Multiple-BB

Configuration)" in the *Fujitsu SPARC M12-2/M12-2S Service Manual* or "Figure 7-6 Active/cold replacement flow (building block configuration only)" in the *Fujitsu M10-4/Fujitsu M10-4S/SPARC M10-4/SPARC M10-4S Service Manual*.

1. **Log in to the XSCF shell.**
2. **Execute the replacefru command to display the maintenance menu.**

```
XSCF> replacefru
```

3. **Select the model requiring maintenance by specifying it with a numeric key.**
   Specify the chassis where the FRU requiring maintenance is mounted. In this example, since the physical partition chassis requires maintenance, "1" is entered.

```
------------------------------------------------------------------------------
Maintenance/Replacement Menu
Please select a type of model which has FRU to be replaced.

1. BB          (4s Building Block Model)
2. XBBOX       (XB-BOX Model)
------------------------------------------------------------------------------
Select [1,2|c:cancel] :1
```

4. **Select the chassis requiring maintenance by specifying it with a numeric key.**
   Select the chassis that indicates an abnormal status. In this example, since maintenance is performed on BB#0 that indicates an abnormal status, "1" is entered.

```
------------------------------------------------------------------------------
Maintenance/Replacement Menu
Please select the chassis including replaced FRU.

No. FRU                 Status
--- ------------------- --------------
 1  /BB#0               Degraded
 2  /BB#1               Normal
 3  /BB#2               Normal
 4  /BB#3               Normal
------------------------------------------------------------------------------
Select [1-4|c:cancel] :1
```

5. **Select the FRU requiring maintenance by specifying it with a numeric key.**
   In this example, since maintenance is performed with the chassis removed, "1" is entered.

```
------------------------------------------------------------------------------
Maintenance/Replacement Menu
Please select the BB or a type of FRU to be replaced.

1. BB itself
2. FAN        (Fan Unit)
```

```
3. PSU        (Power Supply Unit)
--------------------------------------------------------------------------------
Select [1-3|c:cancel] :1
```

6. **Select the part requiring maintenance by specifying it with a numeric key.**
   For the FRU selected in step 5, each part status is shown. In this example, since the chassis of BB#0 is to be removed, "1" is entered.

```
--------------------------------------------------------------------------------
Maintenance/Replacement Menu
Please select a FRU to be replaced.

No. FRU                  Status
--- -------------------- --------------
 1  /BB#0                Degraded
--------------------------------------------------------------------------------
Select [1|b:back] :1
```

7. **After confirming that the selected FRU is displayed, enter "r".**

```
You are about to replace BB#0.
Do you want to continue?[r:replace|c:cancel] :r
```

8. **Confirm that the CHECK LEDs on the operation panel of the chassis requiring maintenance and the system locator are blinking and the CHECK LED on the FRU requiring maintenance is on or blinking.**
   For details on the locations of LEDs, see "2.3.2 LEDs on the Rear Panel (System Locator)" and "2.3 Checking the LED Indications."

```
Please execute the following steps:
1) Confirm the XSCF STANDBY LED of BB#0 is not lit.
2) Turn off the breaker of BB#0.
3) Remove BB#0.
4) Execute either the following:
  4-1) After the exchanged device is connected with the system,
       turn on the breaker of BB#0, and please select 'finish'.
  4-2) If you want to suspend the maintenance without exchanging device,
       please select 'cancel'.
[f:finish|c:cancel] :
```

Then, remove the FRU requiring maintenance. For the procedure for removing a FRU, see the maintenance procedure on FRUs in Chapter 8 and later. Do not enter "f" until you complete the maintenance work.

After replacing the chassis or the FRU requiring maintenance, enter "f" to start restoring the chassis of the physical partition. For details, see "6.2.2 Restoring the FRUs of the Chassis of the Physical Partition."

5.5 Accessing a FRU

This section describes the operations that must be completed before access to the FRU requiring maintenance.

5.5.1 Removing the Power Cord

When removing the power cord of the chassis to perform maintenance work on a FRU, do so only after removing the cable clamp from the power cord.

Removing the power cord of the crossbar box

1. **Release the latch (A in Figure 5-1) of the cable clamp.**
   Pulling the cable clamp toward the rear of the chassis facilitates the release of the latch.

Figure 5-1 Releasing the Cable Clamp (Crossbar Box)

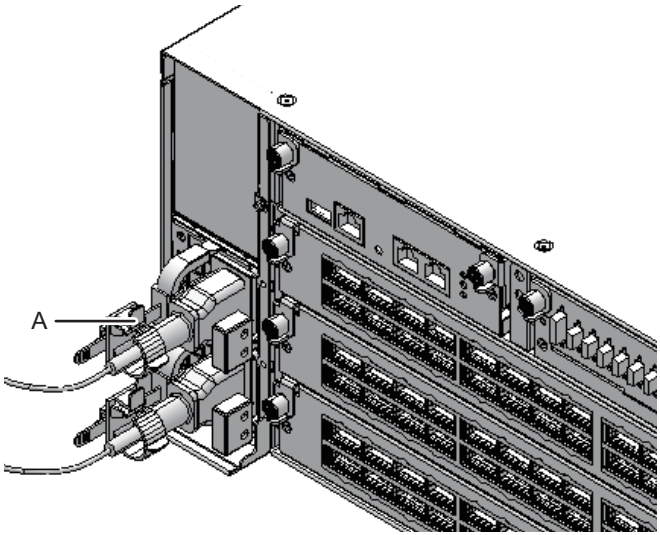

2. **Remove the power cord from the power supply unit on the rear of the chassis.**

Figure 5-2 Removing the Power Cord (Crossbar Box)

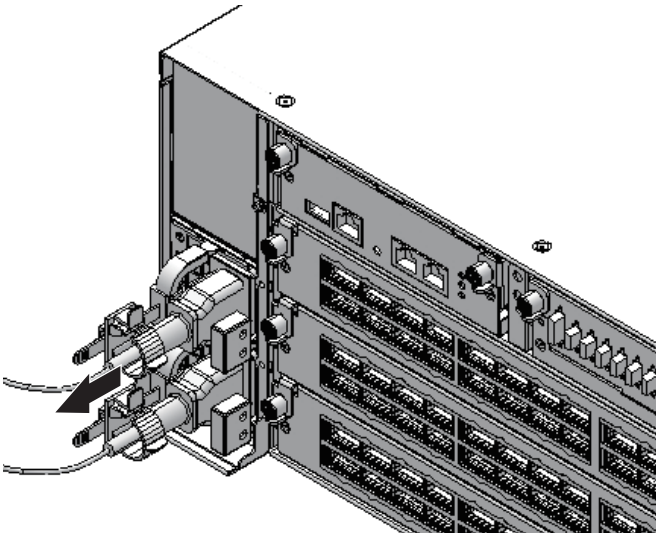

Removing the Power Cord of the SPARC M12-2S or the SPARC M10-4S

1. **Release the latch (A in Figure 5-3) of the cable clamp.**
   Pulling the cable clamp toward the rear of the chassis facilitates the release of the latch.

Figure 5-3 Releasing the Cable Clamp (SPARC M12-2S)

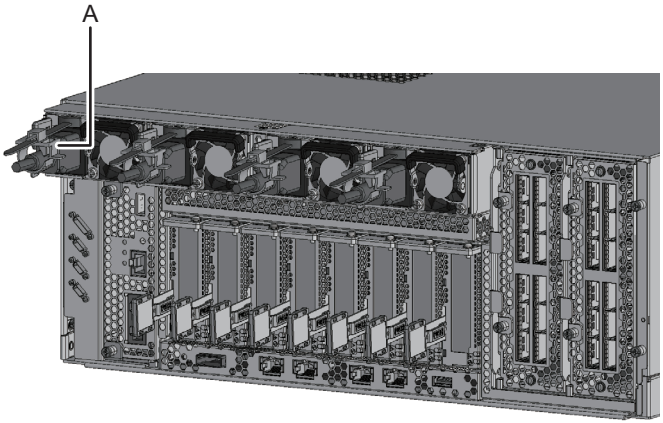

Figure 5-4 Releasing the Cable Clamp (SPARC M10-4S)

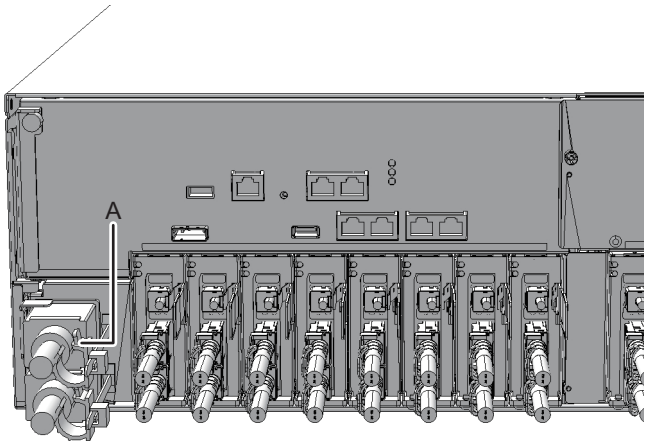

2. **Remove the power cord from the power supply unit of the SPARC M12-2S or the PSU backplane unit of the SPARC M10-4S.**

Figure 5-5 Removing the Power Cord (SPARC M12-2S)

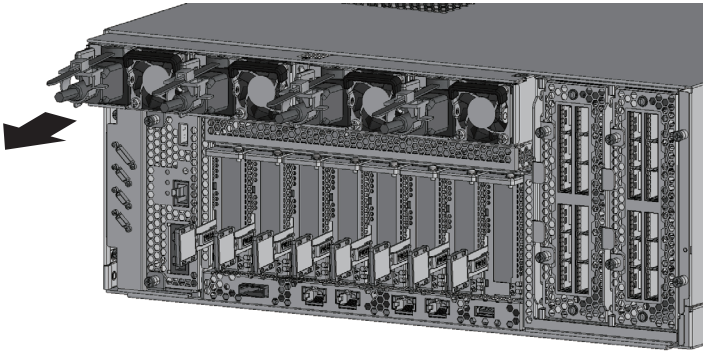

Figure 5-6 Removing the Power Cord (SPARC M10-4S)

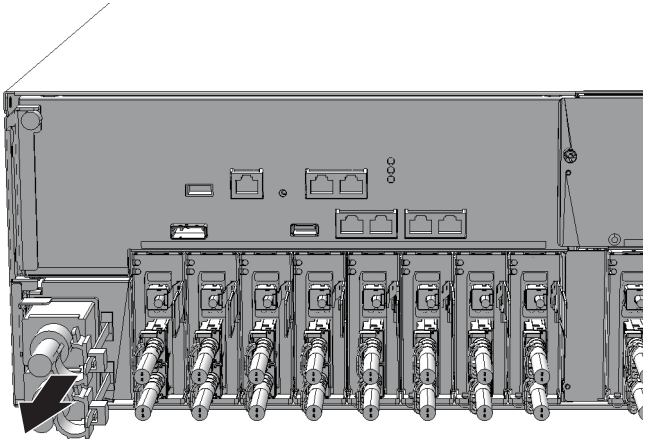

5.5.2 Removing the Front Cover

To perform maintenance on the following FRUs from the front of the crossbar box chassis, remove the front cover before starting the work:

- Fan unit
- Fan backplane
- Operation panel

1. **Release the right and left slide locks of the front cover and pull it toward the front.**

Figure 5-7 Releasing the Slide Locks of the Front Cover

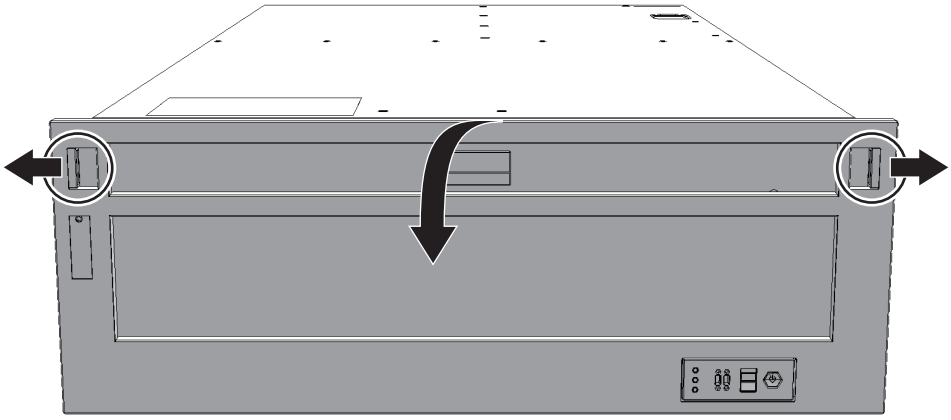

2. **Lift the front cover upward to remove it.**

Chapter 6

Restoring the System

This chapter describes the procedures required to restore the system after FRU maintenance. See this chapter, as required, when performing maintenance on each FRU described in Chapter 8 onward.

6.1 Restoring the Chassis

This section describes operations required to restore the chassis.

6.1.1 Installing the Power Cord

If the power cord of the chassis was removed to perform the maintenance work, connect the power cord and then attach the cable clamp to the power cord.

Installing the Power Cord of the Crossbar Box

1. **Insert the power cord plug all the way straight into the power supply unit of the crossbar box.**

Figure 6-1 Installing the Power Cord (Crossbar Box)

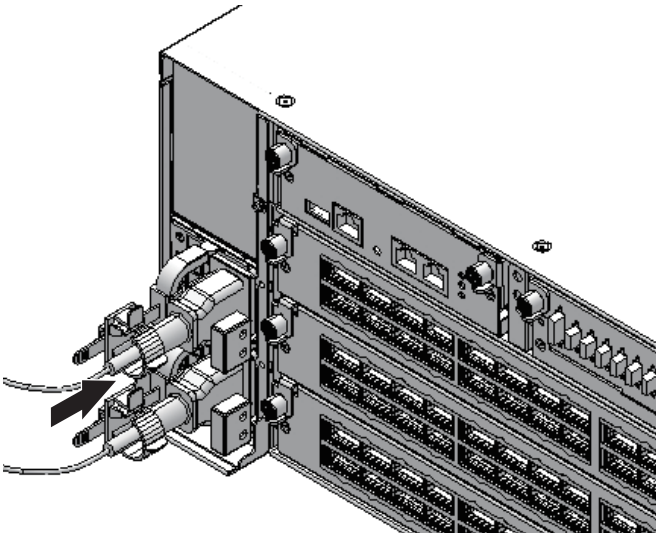

2. **Clip the cable clamp around the power cord, and secure the cable clamp.**
   Lock the latch (A in Figure 6-2) and then push the cable clamp toward the front of the chassis to firmly secure the cable clamp.

Figure 6-2 Locking the Cable Clamp (Crossbar Box)

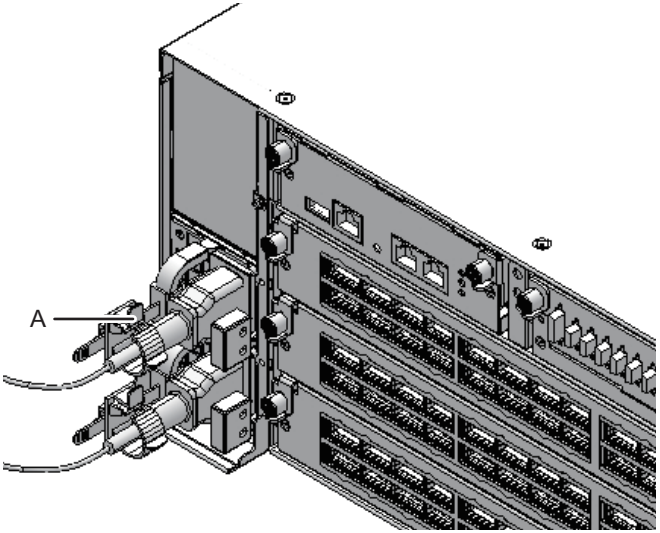

Connecting the Power Cord to the SPARC M12-2S or the SPARC M10-4S

1. **Insert the power cord plug all the way straight into the power supply unit of the SPARC M12-2S or the PSU backplane unit of the SPARC M10-4S.**

Figure 6-3 Installing the Power Cord (SPARC M12-2S)

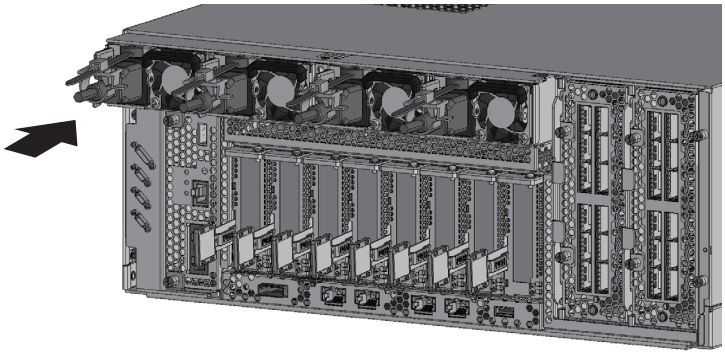

Figure 6-4 Installing the Power Cord (SPARC M10-4S)

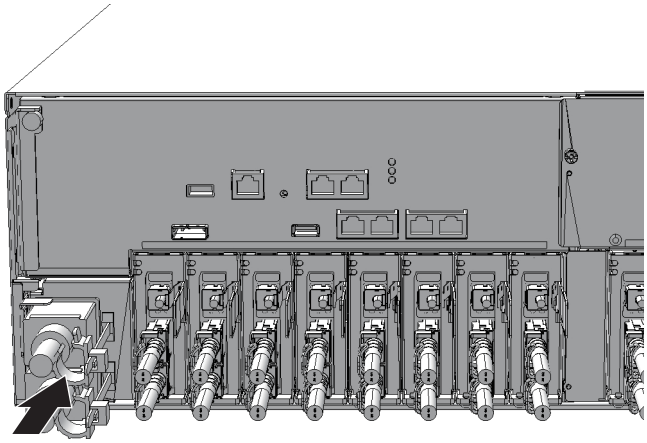

2. **Clip the cable clamp around the power cord, and secure the cable clamp.**
   Lock the latch (A in Figure 6-6) and then push the cable clamp toward the front of the chassis to firmly secure the cable clamp.

Figure 6-5 Locking the Cable Clamp (SPARC M12-2S)

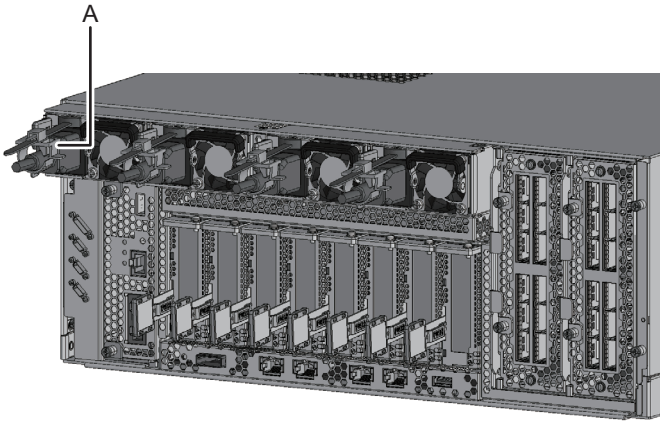

Figure 6-6 Locking the Cable Clamp (SPARC M10-4S)

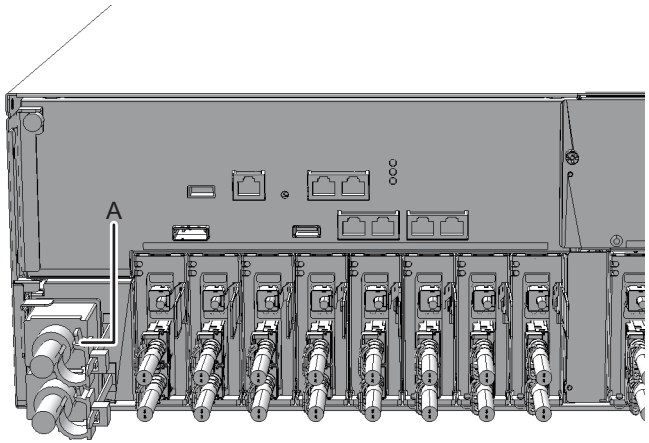

6.1.2 Installing the Front Cover

If the front cover of the crossbar box was removed to perform maintenance, install it after installing the FRU at the front of or inside the chassis.

1. **To install the front cover, insert the tabs of the front cover into the notches at the bottom front of the chassis.**

Figure 6-7 Installing the Front Cover

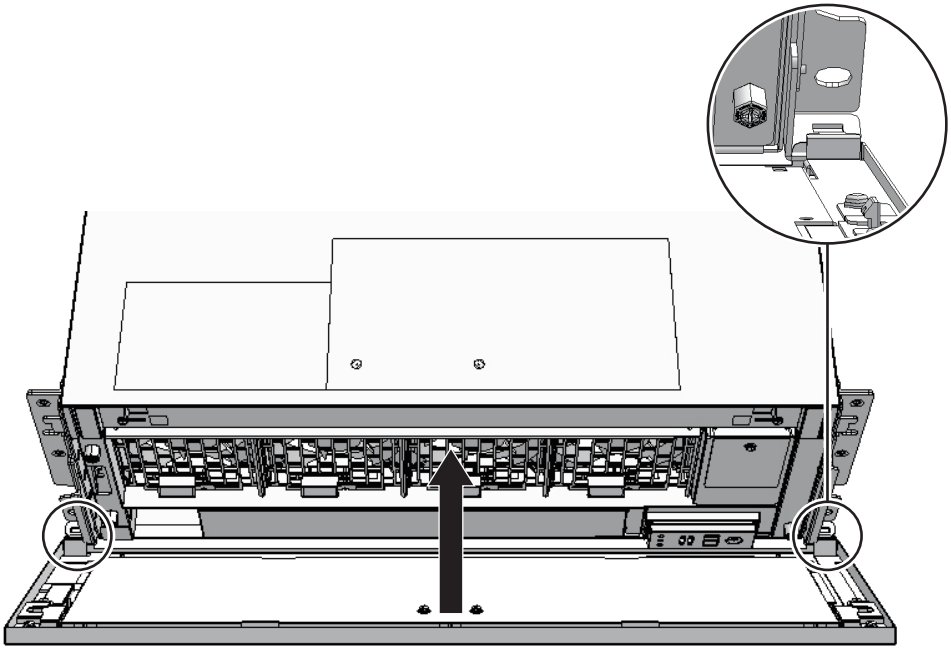

Note - Check that the front cover is firmly attached and fixed.

6.2 Incorporating the FRUs of the Crossbar Box Into the System With the replacefru Command

The FRUs subject to the operation described here are as follows:

- XSCF unit of the crossbar box
- Power supply unit of the crossbar box
- Fan unit of the crossbar box
- Chassis of the SPARC M12-2S or the SPARC M10-4S

6.2.1 Restoring the Crossbar Box With the replacefru Command

This section describes the procedure for restoring the crossbar box, using the XSCF unit of the crossbar box as an example.

Following the operations up to step 9 in "5.4.1 Releasing FRUs of the Crossbar Box With the replacefru Command," the restoration procedure in the example below starts after the completion of installation of a new XSCF unit for the crossbar box.

1. **After installing the FRU requiring maintenance to the crossbar box, return to the operation of the replacefru command of the XSCF firmware, and enter "f".**
   In the following example, "f" is entered after the XSCF unit is replaced.

```
Please execute the following steps:
1) Confirm the XSCF STANDBY LED of XBBOX#80/XSCFU is not lit.
2) Remove XBBOX#80/XSCFU.
3) After installing the exchanged device, please select [f:finish] :f
```

   Incorporation of the replaced FRU into the crossbar box starts. Wait until the incorporation completes.

   A message like the one shown below appears at XSCF unit incorporation.

```
Waiting for XBBOX#80/XSCFU to enter install state.
[This operation may take up to 20 minute(s)]
(progress scale reported in seconds)
   0.....  30.....  60.....  90..... 120..... 150..... 180..... 210.....
 240..... 270..... 300..... 330..... 360..... 390. done
Waiting for XBBOX#80/XSCFU to enter ready state.
[This operation may take up to 45 minute(s)]
(progress scale reported in seconds)
   0.....  30.....  60.....  90..... 120..... 150..... 180..... 210.....
 240..... 270..... 300..... 330..... 360..... 390..... 420..... done
```

2. **Confirm that the replaced FRU is incorporated normally into the crossbar box, and enter "f".**
   In the following example, normal incorporation of the XSCF unit into the crossbar box is confirmed and "f" is entered.

```
------------------------------------------------------------------------------
Maintenance/Replacement Menu
Status of the replaced FRU.

FRU                 Status
------------------- --------------
/XBBOX#80/XSCFU     Normal
```

```
--------------------------------------------------------------------------------
The replacement of XBBOX#80/XSCFU has completed normally.[f:finish] :f
```

Note - The completion message shown above appears when the incorporation of the XSCF unit into the crossbar box completes. However, the activation of the replaced XSCF unit firmware may not have completed by then. When you perform maintenance work on the XSCF unit, enter "f" 10 or more minutes after the incorporation completion message shown above appears.

3. **When the maintenance menu appears, enter "c" to exit the replacefru command.**

```
--------------------------------------------------------------------------------
Maintenance/Replacement Menu
Please select a type of model which has FRU to be replaced.
1. BB         (4s Building Block Model)
2. XBBOX      (XB-BOX Model)
--------------------------------------------------------------------------------
Select [1,2|c:cancel] :c
```

6.2.2 Restoring the FRUs of the Chassis of the Physical Partition

This section describes the procedure for restoring the FRUs of the physical partition, using the operation for restoring the physical partition chassis to the building block configuration as an example.

Following the operations up to step 8 in "5.4.2 Releasing FRUs in the Chassis of the Physical Partition," the restoration procedure in the example below starts after the repair of the fault location and the completion of steps up to physical connection of the XSCF BB control cable, crossbar cables, etc.

1. **After installing the FRU requiring maintenance to the physical partition, return to the operation of the replacefru command of the XSCF firmware, and enter "f".**

   In the following example, the connection of the power cord to the physical partition chassis and the start of blinking of the READY LED on the XSCF are confirmed, and "f" is entered.

```
Please execute the following steps:
1) Confirm the XSCF STANDBY LED of BB#0 is not lit.
2) Turn off the breaker of BB#0.
3) Remove BB#0.
4) Execute either the following:
  4-1) After the exchanged device is connected with the system,
       turn on the breaker of BB#0, and please select 'finish'.
  4-2) If you want to suspend the maintenance without exchanging device,
```

```
        please select 'cancel'.
[f:finish|c:cancel] :f
```

Entering "f" displays the following screen. Wait until the processing has completed.

```
Waiting for BB#0 to enter install state.
[This operation may take up to 20 minute(s)]
(progress scale reported in seconds)
   0..... 30..... 60..... 90..... 120..... 150..... 180..... 210.....
 240..... 270..... 300..... 330..... 360..... done
Waiting for BB#0 to enter ready state.
[This operation may take up to 45 minute(s)]
(progress scale reported in seconds)
   0..... 30..... 60..... 90..... 120..... 150..... 180..... 210.....
 240..... 270..... 300..... done
```

2. **When the chassis of the physical partition is incorporated, the following confirmation message appears. Enter "s".**

```
Do you want to start to diagnose BB#0?[s:start|c:cancel] :s
```

3. **The following confirmation message appears. Enter "y" to start the diagnosis.**

```
Diagnostic tests for BB#0 have started.
Initial diagnosis is about to start, Continue?[y|n] :y
```

A screen like the one below appears. Wait until the processing has completed.

```
PSB#00-0 power on sequence started.
  0..... 30..... 60..... 90.....120.....150.....180.....210.end
Initial diagnosis started. [7200sec]
  0..... 30..... 60..... 90.....120.....150.....180.....210.....240.....|
270.....300.....330.....360.....390.....420.....450.....480.....510.....|
540.....570.....600.....630.....660.....690.....720.....750.....780.....\
810.....840.....870.....900.....930.end
Initial diagnosis has completed.
PSB power off sequence started. [1200sec]
  0..... 30..... 60..... 90.end
PSB powered off.
PSB  Test    Fault
---- ------- --------
00-0 Passed  Normal
done
```

4. **The diagnosis result appears when the diagnosis completes. Confirm that the status is normal ("Normal"), and then enter "f".**

```
--------------------------------------------------------------------------------
Maintenance/Replacement Menu
Status of the replaced FRU.

FRU                 Status
------------------- --------------
/BB#0               Normal
--------------------------------------------------------------------------------
The replacement of BB#0 has completed normally.[f:finish] :f
```

5. **Enter "c" to stop maintenance, and terminate the replacefru command.**

```
--------------------------------------------------------------------------------
Maintenance/Replacement Menu
Please select a type of model which has FRU to be replaced.

1. BB         (4s Building Block Model)
2. XBBOX      (XB-BOX Model)
--------------------------------------------------------------------------------
Select [1,2|c:cancel] :c
```

6.3 Diagnosing a Replacement FRU

This section describes how to diagnose a replacement FRU.

Note - After maintenance has been performed on a SPARC M12-2S or SPARC M10-4S chassis, see "10.5 Diagnosing a Replacement FRU" in the *Fujitsu SPARC M12-2/M12-2S Service Manual* or "6.3.1 Diagnosing the system board" in the *Fujitsu M10-4/Fujitsu M10-4S/SPARC M10-4/SPARC M10-4S Service Manual* to diagnose the SPARC M12-2S or SPARC M10-4S chassis by using the testsb command.

6.3.1 Diagnosing the Crossbar Unit and Crossbar Cables

This section shows an example of the command for diagnosing the crossbar unit mounted in the physical partition chassis in a system with a building block configuration. The command also diagnoses the crossbar cables in the chassis and their connection status.

The following example shows the diagnosis of the crossbar cable between PPAR-ID 0 and BB-ID 1 and the crossbar unit.

The meanings of the specified options are as follows.

-b *bb_id*

Specify the BB-ID of the chassis of the SPARC M12-2S or the SPARC M10-4S to start the diagnosis.
You can specify *bb_id* with an integer from 0 to 3 for the SPARC M12-2S or SPARC M10-4S (without the crossbar box) or from 0 to 15 for the SPARC M12-2S or SPARC M10-4S (with a crossbar box). This option can be specified with -t or -p.

-p *ppar_id*

Specify the PPAR-ID of the physical partition on which the SPARC M12-2S or SPARC M10-4S chassis that is the communication destination is operating.
You can specify *ppar_id* with an integer from 0 to 15 depending on the system configuration.

```
XSCF> diagxbu -b 1 -p 0
XBU diagnosis is about to start, Continue?[y|n] :y
Power on sequence started. [7200sec]
  0..... 30..... 60..... 90.....120end
XBU diagnosis started. [7200sec]
  0..... 30..... 60..... 90.....120end
completed.
Power off sequence started. [1200sec]
  0..... 30..... 60..... 90.....120end
completed.
*Note*
Please confirm the error of XBU by "showlogs error".
In addition, please confirm the degraded of XBU by "showstatus".
```

Even if you perform maintenance on the chassis of the physical partition (including the CPU memory unit) with the replacefru command, the diagxbu command is not executed. After physical partition maintenance work with the crossbar unit and crossbar cables removed, use the diagxbu command to diagnose the condition of the crossbar unit and crossbar cables and the crossbar cable connection status.

6.3.2 Checking the FRU Status After Maintenance

This section describes the procedure for confirming that the FRU is operating normally after the completion of maintenance.

1. **Log in to the XSCF shell.**
2. **Execute the showstatus command.**
   If there is no problem, nothing is displayed.

```
XSCF> showstatus
```

3. **Execute the showlogs error command.**
   Confirm that no new errors are displayed.

```
XSCF> showlogs error
```

4. **Execute the showhardconf command.**
   Confirm that no asterisk (*) is displayed in front of any FRU.

   The following example shows execution on the SPARC M10-4S.

```
XSCF> showhardconf
SPARC M10-4S;
+ Serial:2081229003; Operator_Panel_Switch:Service;
+ System_Power:On; System_Phase:Cabinet Power On;
  Partition#0 PPAR_Status:Running;
BB#00 Status:Normal; Role:Master; Ver:2050h; Serial:2081229003;
+ FRU-Part-Number:CA07361-D202 A0 ;
+ Power_Supply_System: ;
+ Memory_Size:320 GB;
-----------------------Omitted-----------------------
PCI#0 Status:Normal; Name_Property:pci;
+ Vendor-ID:108e; Device-ID:9020;
+ Subsystem_Vendor-ID:0000; Subsystem-ID:0000;
+ Model:;
+ Connection:7001;
  PCIBOX#7001; Status:Faulted; Ver:1110h; Serial:2121237001;
+ FRU-Part-Number:;
IOB Status:Normal; Serial:PP123403JE ;
+ FRU-Part-Number:CA20365-B66X 008AG ;
LINKBOARD Status:Normal; Serial:PP1234026P ;
+ FRU-Part-Number:CA20365-B60X 001AA ;
PCI#1 Name_Property:ethernet;
+ Vendor-ID:1077; Device-ID:8000;
+ Subsystem_Vendor-ID:1077; Subsystem-ID:017e;
+ Model:;
-----------------------Omitted--------------------
```

6.4 Restoring XSCF Setting Information

This section describes how to restore the XSCF setting information saved to the USB device in "5.3 Saving XSCF Setting Information."

To restore the XSCF setting information, use the restoreconfig command as shown in the following example.

```
XSCF> restoreconfig -V file:///media/usb_msd/system.cfg
```

For details, see "10.10 Saving/Restoring XSCF Settings Information" in the *Fujitsu SPARC M12 and Fujitsu M10/SPARC M10 System Operation and Administration Guide*.

6.5 Incorporating a Chassis Into a Physical Partition

This section describes the procedure for incorporating a chassis into a physical partition by using dynamic reconfiguration for the physical partition (PPAR DR) after chassis maintenance.

1. **Log in to the XSCF shell.**
2. **Execute the addboard command with the -c configure option specified to incorporate the target chassis into the physical partition.**
   Enter "y" in response to the confirmation message.

Note - In system board (PSB) incorporation using the addboard command, the target system board (PSB) is incorporated into the physical partition after a hardware diagnosis of the PSB. Therefore, it may take time for the command execution to complete.

In the following example, PSB 00-0 is incorporated into PPAR-ID 0.

```
XSCF> addboard -c configure -p 0 00-0
PSB#00-0 will be configured into PPAR-ID 0. Continue?[y|n] :y
Start connecting PSB to PPAR. [3600sec]
  0..... 30..... 60..... 90.....120.....150.....180.....210.....240.....\
270.....300.....330.....360.....390.....420.....450.....480.....510.....-
540.....570.....end
Connected PSB to PPAR.
Start configuring PSB to Logical Domains (LDoms) Manager. [1800sec]
  0.....end
Configured PSB to Logical Domains (LDoms) Manager.
Operation has completed.
```

Note - If you execute the addboard command without specifying the -m option or with bind=resource specified for the -m option, the resource assignment state before deleteboard command execution may not be restored.
If the amount of system board (PSB) resources, such as CPUs and memory, before replacement differs from that after replacement, you cannot restore the original resource assignment state. If the resource assignment state is not restored to the original state, the resources are placed in the free resource state. In this case, execute the ldm command to assign the resources to the logical domains again.

---

3. **Execute the showresult command to check the end status of the addboard command that was just executed.**
   The following example shows that "0" is returned as the end status and the execution of the addboard command has been completed successfully.

```
XSCF> showresult
0
```

4. **Execute the showboards command to confirm that the chassis requiring maintenance has been incorporated into the physical partition.**
   The BB-ID of the server requiring maintenance is indicated by the system board (PSB) number.

   In the following example, [Fault] of PSB 00-0 displays "Normal", which indicates that the system board is operating normally.

```
XSCF> showboards -a
PSB  PPAR-ID(LSB) Assignment  Pwr  Conn Conf Test    Fault
---- ------------ ----------- ---- ---- ---- ------- --------
00-0 00(00)       Assigned    y    y    y    Passed  Normal
01-0 00(01)       Assigned    y    y    y    Passed  Normal
02-0 00(02)       Assigned    y    y    y    Passed  Normal
03-0 00(03)       Assigned    y    y    y    Passed  Normal
```

5. **Execute the showstatus command to confirm that the FRU is operating normally after the completion of maintenance.**
   Nothing is displayed if it is normal.

```
XSCF> showstatus
```

6. **Execute the showhardconf command to check the hardware configuration and the status of each FRU.**
   Confirm that no asterisk (*) is displayed in front of any FRU.

```
XSCF> showhardconf
```

7. **If the master chassis requiring maintenance was switched to the standby state before maintenance, execute the switchscf command to switch the chassis to the master XSCF.**

```
XSCF> switchscf -t Standby
```

8. **Restore the logical domain of the physical partition to its pre-maintenance state.**
   For details, see "10.2 Restoring Setting Information" and "10.4 Incorporating a FRU Into the System" in the *Fujitsu SPARC M12-2/M12-2S Service Manual* or "6.5.2 Incorporating an I/O device" and "6.5.3 Restoring a logical domain to the pre-maintenance state" in the *Fujitsu M10-4/Fujitsu M10-4S/SPARC M10-4/SPARC M10-4S Service Manual*.

6.6 Returning the Mode Switch to Locked Mode

This section describes the procedure for enabling the normal operation state on a system having a building block configuration with the crossbar box connected.

1. **Switch the mode switches of the master chassis and those chassis whose XSCFs are in the standby state to Locked mode.**
   The BB-ID of the chassis with the mode switch to be switched is "80" and "81" in a building block configuration with the crossbar box connected.

6.7 Powering On the Physical Partition Requiring Maintenance

This section describes the procedure for powering on a physical partition requiring maintenance.

1. **Switch the mode switches of the master chassis and those chassis (BB-ID#00, #01) whose XSCFs are in the standby state to Locked mode.**
2. **Log in to the XSCF shell.**
3. **Execute the showstatus command to confirm that the FRU is operating normally after the completion of maintenance.**
   Nothing is displayed if it is normal.

```
XSCF> showstatus
```

4. **Execute the showhardconf command to check the hardware configuration and the status of each FRU.**

```
XSCF> showhardconf
```

5. **If the state of the master chassis requiring maintenance has been switched to the standby state before maintenance, execute the switchscf command to switch the chassis to the master XSCF.**

```
XSCF> switchscf -t Standby
```

6. **Execute the poweron command to power on the stopped physical partition.**
   In the following example, PPAR-ID 0 is specified.

```
XSCF> poweron -p 0
```

6.8 Starting the Entire System

This section describes the procedure for starting the entire system.

The system can be started in either of the following two ways:

- Starting the System With an XSCF Command
- Starting the System From the Operation Panel

6.8.1 Starting the System With an XSCF Command

1. **Check that the XSCF STANDBY LED on the operation panel is on.**
2. **Log in to the XSCF shell.**
3. **Execute the poweron command.**
   Enter "y" in response to the confirmation message.

```
XSCF> poweron -a
PPAR-IDs to power on:00,01
Continue? [y|n] :y
00 : Powering on
01 : Powering on
```

4. **Confirm that the POWER LED on the operation panel is on.**
5. **Execute the showpparstatus command to confirm that the power to all the physical partitions in the system is turned on.**

6.8.2 Starting the System From the Operation Panel

1. **Check that the XSCF STANDBY LED on the operation panel is on.**
2. **Log in to the XSCF shell.**
3. **Press the power switch on the operation panel for 1 second or more (less than 4 seconds).**
   For details, see "2.2.2 Control Function of the Operation Panel."

Note - For a building block configuration, press the power switch on the master chassis. The power switches of the other chassis are disabled.

---

4. **Confirm that the POWER LED on the operation panel is on.**
5. **Execute the showpparstatus command to confirm that the power to all the physical partitions in the system is turned on.**

Chapter 7

Maintenance Flow

This chapter describes the crossbar box maintenance workflow.

Be sure to check the notes on FRUs requiring maintenance in the latest version of the *Product Notes* for your server.

7.1 Maintenance Workflow

Figure 7-1 Maintenance Workflow in the Building Block Configuration With the Crossbar Box Connected

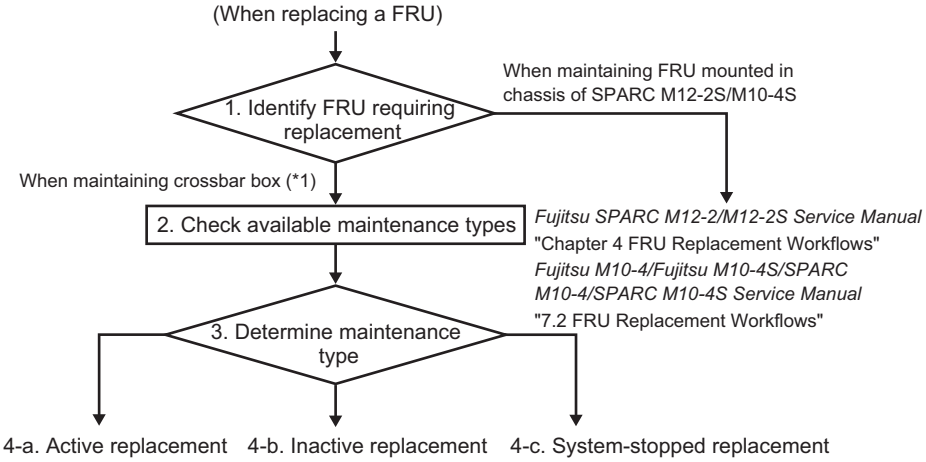

*1 This includes maintenance on cables connecting crossbar boxes to each other and cables connecting a crossbar box to the SPARC M12-2S/M10-4S.

Table 7-1 Maintenance Workflow

Item	Procedure	Reference
1	Identifying the FRU to be replaced	"4.2.2 Identifying a Failure"
2	Checking the available maintenance types	"Table 7-2 Types of Maintenance That Can be Applied to Each Crossbar Box FRU"
3	Determining the maintenance types (*1)	
4	Replacing a FRU (*2)	
4-a	Active replacement	"7.2 Active Maintenance Flow"
4-b	Inactive replacement	"7.3 Inactive Maintenance Flow"
4-c	System-stopped replacement	"7.4 System-Stopped Maintenance Flow"

*1 The configuration of the system requiring maintenance and the FRU to be replaced may affect system operation, such as in maintenance time and in stopping the logical domains. Consult with the system administrator to decide the maintenance type to be used.
*2 FRUs mounted in the crossbar box can only be replaced, and no FRU can be added or removed.

Note - For systems in the building block configuration with the crossbar box connected, addition and removal work is enabled only for the target FRUs or the chassis of the physical partitions. To add or remove any FRU of a physical partition, see "Chapter 4 FRU Replacement Workflows" in the *Fujitsu SPARC M12-2/M12-2S Service Manual* or "Chapter 7 Maintenance Flow" in the *Fujitsu M10-4/Fujitsu M10-4S/SPARC M10-4/SPARC M10-4S Service Manual*. To add or remove the chassis of a physical partition, see Chapter 8 or subsequent parts in the *Fujitsu SPARC M12-2S Installation Guide* or Chapter 8 or subsequent parts in the *Fujitsu M10-4S/SPARC M10-4S Installation Guide*.

Table 7-2 lists types of maintenance that can be applied to each crossbar box FRU. Active maintenance and inactive maintenance are not enabled when the power is disconnected or not being supplied.

Table 7-2 Types of Maintenance That Can be Applied to Each Crossbar Box FRU

-: Maintenance cannot be performed.

FRU	Active		Inactive		System Stopped	
	Hot Maintenance	Cold Maintenance	Hot Maintenance	Cold Maintenance	Hot Maintenance	Cold Maintenance
XSCF unit	OK (*1)	-	OK (*1) (*5)	-	OK (*1)	OK (*4)
XSCF BB control cable	OK (*2)	OK (*2)	OK (*2)	OK (*2)	OK (*2)	OK (*2)
XSCF DUAL control cable	OK	-	OK (*5)	-	OK	OK (*4)
Crossbar cable	-	-	-	OK (*2)	-	OK (*2)
Crossbar unit	-	-	-	-	-	OK (*4)
Power supply unit	OK (*3)	-	OK (*3) (*5)	-	OK (*3)	OK (*4)
XSCF interface unit	-	-	-	-	-	OK (*4)
Fan unit	OK (*3)	-	OK (*3) (*5)	-	OK (*3)	OK (*4)
Fan backplane	-	-	-	-	-	OK (*4)
Operation panel	-	-	-	-	-	OK (*4)
Cable kit	-	-	-	-	-	OK (*4)
Crossbar backplane unit	-	-	-	-	-	OK (*4)
Dedicated power distribution unit	OK (*3)	-	OK (*3) (*5)	-	OK (*3)	OK (*4)

*1 Maintenance is performed on the XSCF in the standby state or a slave XSCF. If the XSCF is operating as the master XSCF, switch it to standby. To replace only the XSCF unit, active/hot maintenance is recommended where the physical partition does not stop.
*2 Hot maintenance is enabled for maintenance on an XSCF BB control cable connecting crossbar boxes to each other. To maintain an XSCF BB control cable or a crossbar cable that connects the crossbar box to the chassis of the physical partition, the connected chassis must be powered off.
*3 Maintenance is supported only for a redundant configuration.
*4 Perform system-stopped/cold maintenance after all the physical partitions are stopped and the power cords of all the chassis are disconnected.
*5 If the physical partition is operating, active/hot maintenance can also be performed.

7.2 Active Maintenance Flow

This section explains the replacement workflows in the active state for the following FRUs mounted on the crossbar box.

- XSCF unit
- XSCF BB control cable
- XSCF DUAL control cable
- Power supply unit
- Fan unit
- Dedicated power distribution unit mounted on the rack for expanded connection

---

Note - Maintenance is not available in the active/cold state for FRUs mounted on the crossbar box. In the active state, only hot maintenance is enabled.

Note - Active/Hot maintenance is enabled for an XSCF BB control cable used in the following connection.
- Cable connecting crossbar boxes to each other

Note - Active/Cold maintenance is enabled for an XSCF BB control cable used in the following connection.
- Cable connecting each chassis to the crossbar box in a configuration where one physical partition consists of chassis with two or more BBs

---

Figure 7-2 shows FRUs with active/hot maintenance enabled.

Figure 7-2 FRUs With Active/Hot Maintenance Enabled

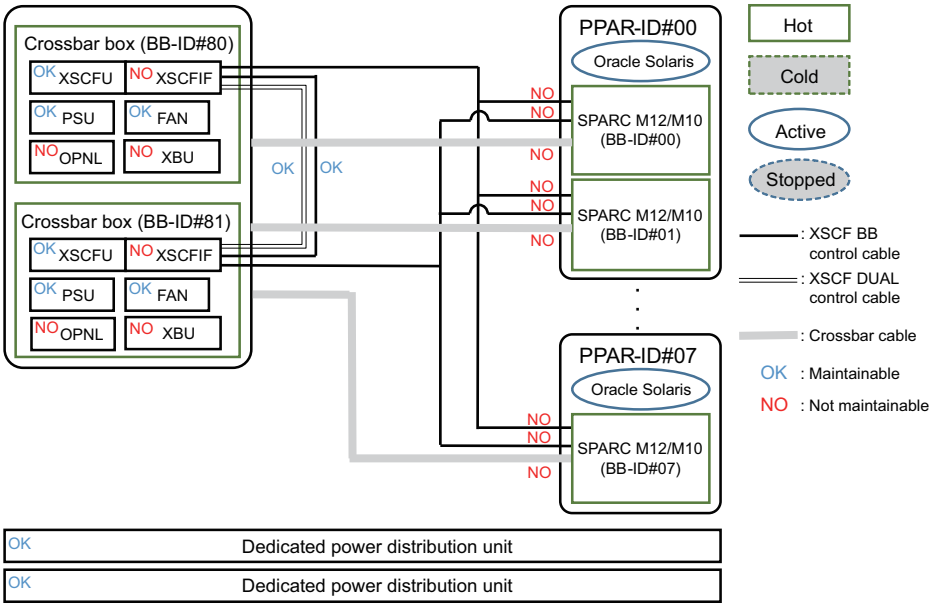

Figure 7-3 shows FRUs with active/cold maintenance enabled.

Figure 7-3 FRUs With Active/Cold Maintenance Enabled

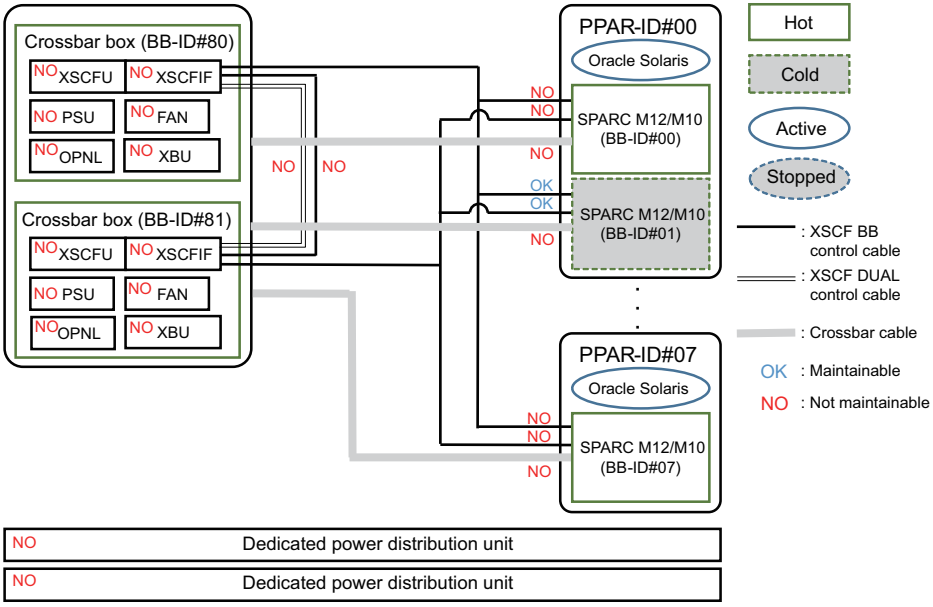

For details on the connection routes of the XSCF BB control cable, XSCF DUAL control cable, and crossbar cable, see "Appendix B Cable Connection Information on Building Block Configurations" in the *Fujitsu SPARC M12-2S Installation Guide* or "Appendix B Cable Connection Information on Building Block Configurations" in

the *Fujitsu M10-4S/SPARC M10-4S Installation Guide*.

Active maintenance has the following patterns:

- Active/Hot Replacement of the XSCF Unit
- Active/Hot Replacement of the XSCF DUAL Control Cable
- Active/Hot Replacement of the XSCF BB Control Cable (Connecting Crossbar Boxes to Each Other)
- Active/Cold Replacement of the XSCF BB Control Cable (Connecting the Crossbar Box to the Chassis of the SPARC M12-2S/M10-4S)
- Active/Hot Replacement of the Power Supply Unit
- Active/Hot Replacement of the Fan Unit
- Active/Hot Replacement of the Dedicated Power Distribution Unit

Active/Hot Replacement of the XSCF Unit

Active/Hot replacement can be performed on the XSCF unit. Perform the following procedure to replace it.

Figure 7-4 Flow of Active/Hot Replacement of the XSCF Unit (*1)

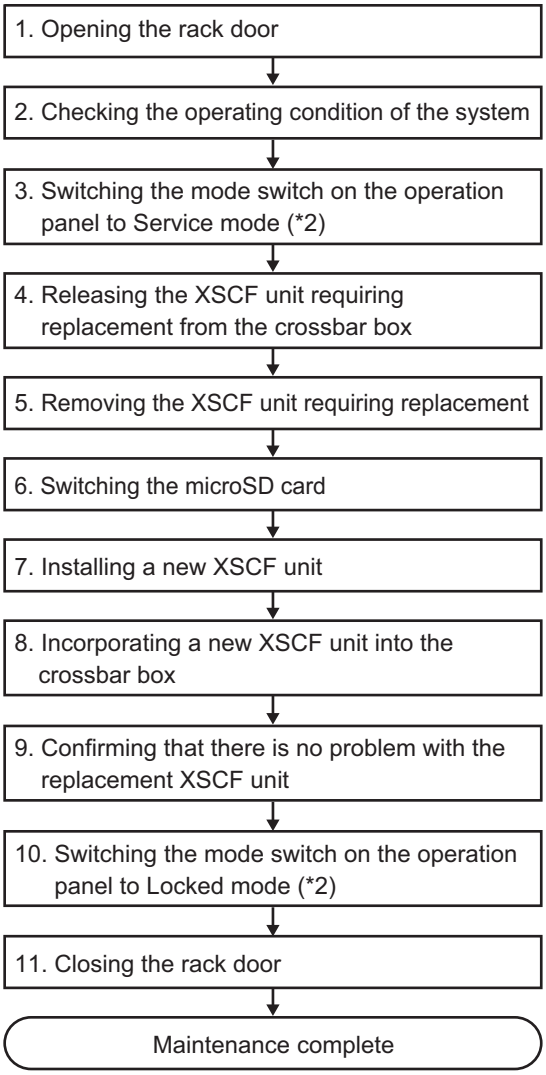

*1 The same procedure is used for inactive/hot replacement of the XSCF unit.
*2 The mode switch on the operation panel does not need to be changed in active maintenance.

Table 7-3 Active/Hot Replacement Work Procedure for the XSCF Unit (*1)

Item	Work Procedure	Reference
1	Opening the rack door	
2	Checking the operating condition of the system	"5.2.1 Checking the Operating Condition of the Physical Partition or Logical Domain"
3	Switching the mode switch on the operation panel to Service mode (*2)	"5.2.2 Switching the Mode Switch to Service Mode"
4	Releasing the XSCF unit requiring replacement from the crossbar box	"5.4.1 Releasing FRUs of the Crossbar Box With the replacefru Command"
5	Removing the XSCF unit requiring replacement	"8.4 Removing the XSCF Unit"
6	Switching the microSD card (can be omitted if the microSD card is not switched)	"8.5 Switching the microSD Card"
7	Installing a new XSCF unit	"8.6 Installing the XSCF Unit"
8	Incorporating a new XSCF unit into the crossbar box	"6.2.1 Restoring the Crossbar Box With the replacefru Command"
9	Confirming that there is no problem with the replacement XSCF unit	"6.3.2 Checking the FRU Status After Maintenance"
10	Switching the mode switch on the operation panel to Locked mode (*2)	"6.6 Returning the Mode Switch to Locked Mode"
11	Closing the rack door	

*1 The same procedure is used for inactive/hot replacement of the XSCF unit.
*2 The mode switch on the operation panel does not need to be changed in active maintenance.

Active/Hot Replacement of the XSCF DUAL Control Cable

Active/Hot replacement can be performed on the XSCF DUAL control cable. Perform the following procedure to replace it.

Figure 7-5 Flow of Active/Hot Replacement of the XSCF DUAL Control Cable (*1)

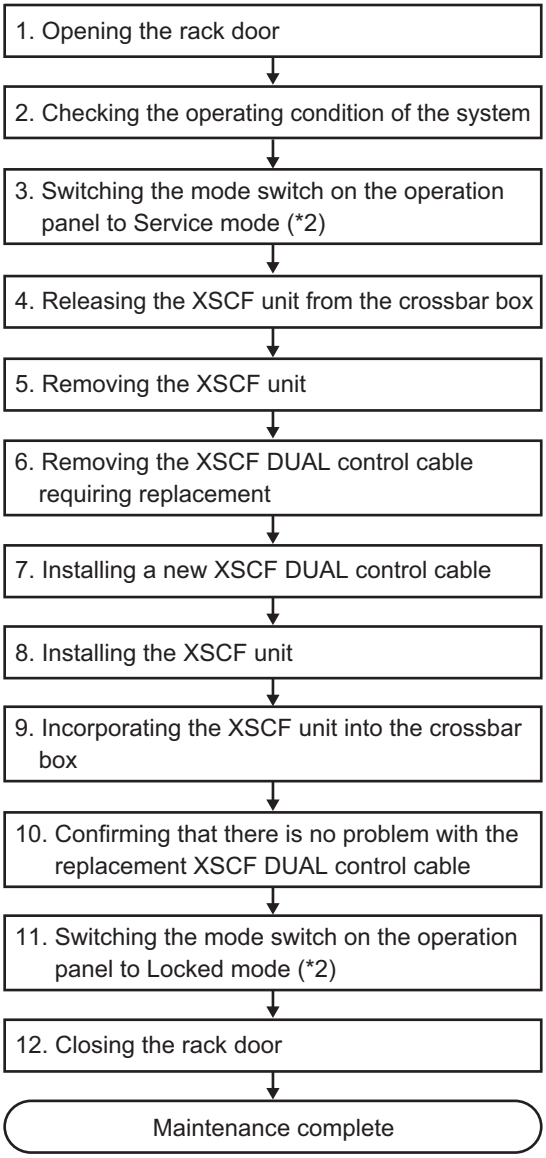

*1 The same procedure is used for inactive/hot replacement of the XSCF DUAL control cable.
*2 The mode switch on the operation panel does not need to be changed in active maintenance.

Table 7-4 Work Procedure for Active/Hot Replacement of the XSCF DUAL Control Cable (*1)

Item	Work Procedure	Reference
1	Opening the rack door	
2	Checking the operating condition of the system	"5.2.1 Checking the Operating Condition of the Physical Partition or Logical Domain"
3	Switching the mode switch on the operation panel to Service mode (*2)	"5.2.2 Switching the Mode Switch to Service Mode"
4	Releasing the XSCF unit from the crossbar box	"5.4.1 Releasing FRUs of the Crossbar Box With the replacefru Command"
5	Removing the XSCF unit (*3)	"8.4 Removing the XSCF Unit"
6	Removing an XSCF DUAL control cable	"10.3 Removing an XSCF DUAL Control Cable"
7	Installing a new XSCF DUAL control cable	"10.4 Installing an XSCF DUAL Control Cable"
8	Installing the XSCF unit	"8.6 Installing the XSCF Unit"
9	Incorporating the XSCF unit into the crossbar box	"6.2.1 Restoring the Crossbar Box With the replacefru Command"
10	Confirming that there is no problem with the replacement XSCF DUAL control cable	"6.3.2 Checking the FRU Status After Maintenance"
11	Switching the mode switch on the operation panel to Locked mode (*2)	"6.6 Returning the Mode Switch to Locked Mode"
12	Closing the rack door	

*1 The same procedure is used for inactive/hot replacement of the XSCF DUAL control cable.
*2 The mode switch on the operation panel does not need to be changed in active maintenance.
*3 When you replace an XSCF DUAL control cable, you need to remove and then install the XSCF unit (pseudo replacement). Here, partially pull the XSCF unit out halfway.

Active/Hot Replacement of the XSCF BB Control Cable (Connecting Crossbar Boxes to Each Other)

Active/Hot replacement can be performed on the XSCF BB control cable connecting crossbar boxes to each other. Perform the following procedure to replace it.

Figure 7-6 Flow of Active/Hot Replacement of the XSCF BB Control Cable (Connecting Crossbar Boxes to Each Other) (*1)

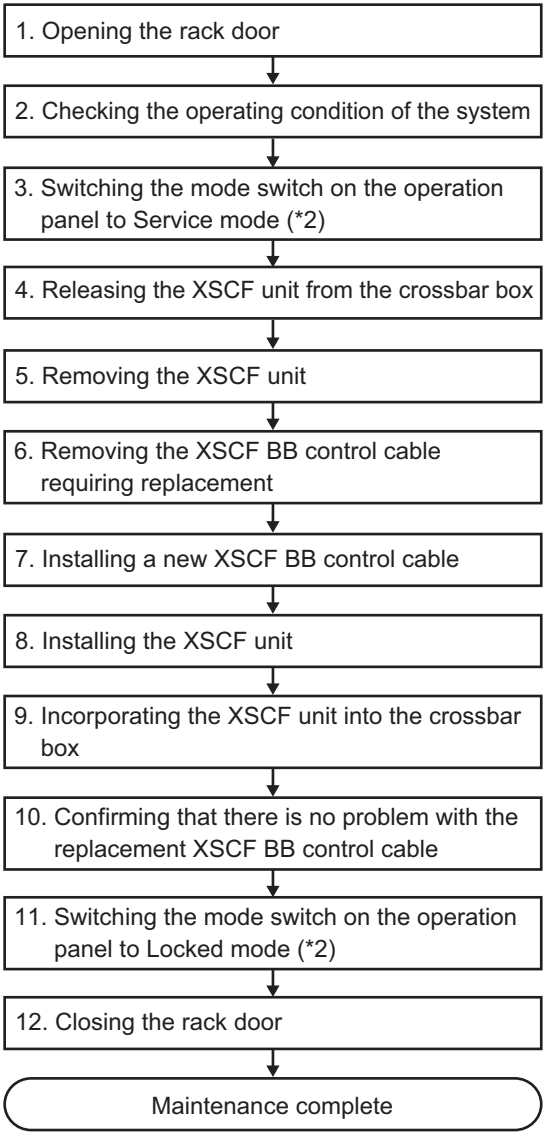

*1 The same procedure is used for inactive/hot replacement of the XSCF BB control cable.
*2 The mode switch on the operation panel does not need to be changed in active maintenance.

Table 7-5 Work Procedure for Active/Hot Replacement of the XSCF BB Control Cable (Connecting Crossbar Boxes to Each Other) (*1)

Item	Work Procedure	Reference
1	Opening the rack door	
2	Checking the operating condition of the system	"5.2.1 Checking the Operating Condition of the Physical Partition or Logical Domain"
3	Switching the mode switch on the operation panel to Service mode (*2)	"5.2.2 Switching the Mode Switch to Service Mode"
4	Releasing the XSCF unit from the crossbar box	"5.4.1 Releasing FRUs of the Crossbar Box With the replacefru Command"
5	Removing the XSCF unit (*3)	"8.4 Removing the XSCF Unit"
6	Removing the XSCF BB control cable requiring replacement	"9.3 Removing an XSCF BB Control Cable"
7	Installing a new XSCF BB control cable	"9.4 Installing an XSCF BB Control Cable"
8	Installing the XSCF unit	"8.6 Installing the XSCF Unit"
9	Incorporating the XSCF unit into the crossbar box	"6.2.1 Restoring the Crossbar Box With the replacefru Command"
10	Confirming that there is no problem with the replacement XSCF BB control cable	"6.3.2 Checking the FRU Status After Maintenance"
11	Switching the mode switch on the operation panel to Locked mode (*2)	"6.6 Returning the Mode Switch to Locked Mode"
12	Closing the rack door	

*1 The same procedure is used for inactive/hot replacement of the XSCF BB control cable.
*2 The mode switch on the operation panel does not need to be changed in active maintenance.
*3 When you replace an XSCF BB control cable, you need to remove and then install the XSCF unit (pseudo replacement). Here, partially pull the XSCF unit out halfway.

Active/Cold Replacement of the XSCF BB Control Cable (Connecting the Crossbar Box to the Chassis of the SPARC M12-2S/M10-4S)

Active/Cold replacement is enabled for an XSCF BB control cable connecting the crossbar box to the chassis of the SPARC M12-2S/M10-4S if it is possible to release the chassis by using PPAR DR. Perform the following procedure to replace it.

Figure 7-7 Flow of Active/Cold Replacement of the XSCF BB Control Cable (Connecting the Crossbar Box to the Chassis of the SPARC M12-2S/M10-4S)

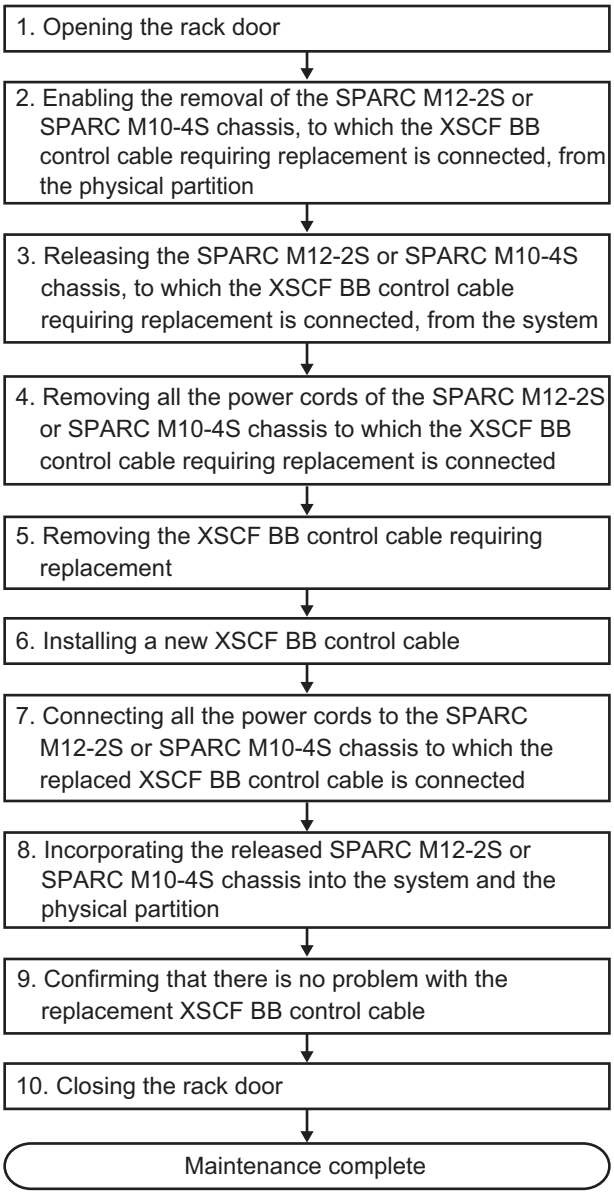

Table 7-6 Work Procedure for Active/Cold Replacement of the XSCF BB Control Cable (Connecting the Crossbar Box to the Chassis of the SPARC M12-2S/M10-4S)

Item	Work Procedure	Reference
1	Opening the rack door	
2	Enabling the removal of the SPARC M12-2S or SPARC M10-4S chassis, to which the XSCF BB control cable requiring replacement is connected, from the physical partition	*Fujitsu SPARC M12-2/M12-2S Service Manual* "9.2.1 Checking the Operation Status of Physical Partitions and Logical Domains" "9.2.2 Checking the Assignment Status of I/O Devices" "9.4 Enabling the Removal of Hardware" "9.4.3 Dynamically Releasing the SPARC M12-2S From the Physical Partition" *Fujitsu M10-4/Fujitsu M10-4S/SPARC M10-4/SPARC M10-4S Service Manual* "5.3.1 Checking the operating condition of the physical partition or logical domain" "5.3.2 Checking the assignment status of I/O devices" "5.4.1 Releasing the assignment of I/O devices" "5.4.3 Releasing a chassis requiring maintenance from the physical partition"
3	Releasing the SPARC M12-2S or SPARC M10-4S chassis, to which the XSCF BB control cable requiring replacement is connected, from the system	*Fujitsu SPARC M12-2/M12-2S Service Manual* "9.6.1 Releasing the SPARC M12-2S From the Building Block Configuration" *Fujitsu M10-4/Fujitsu M10-4S/SPARC M10-4/SPARC M10-4S Service Manual* "5.8.1 Releasing of the SPARC M10-4S chassis (possible only in a system with a building block configuration)"
4	Removing all the power cords of the SPARC M12-2S or SPARC M10-4S chassis to which the XSCF BB control cable requiring replacement is connected	"Removing the Power Cord of the SPARC M12-2S or the SPARC M10-4S" in "5.5.1 Removing the Power Cord"
5	Removing the XSCF BB control cable requiring replacement	"9.3 Removing an XSCF BB Control Cable"
6	Installing a new XSCF BB control cable	"9.4 Installing an XSCF BB Control Cable"
7	Connecting all the power cords to the SPARC M12-2S or SPARC M10-4S chassis to which the replaced XSCF BB control cable is connected	"Connecting the Power Cord to the SPARC M12-2S or the SPARC M10-4S" in "6.1.1 Installing the Power Cord"
8	Incorporating the released SPARC M12-2S or SPARC M10-4S chassis into the system and the physical partition	*Fujitsu SPARC M12-2/M12-2S Service Manual* "10.4.1 Incorporating the SPARC M12-2S Into a Building Block Configuration" "10.6 Incorporating the SPARC M12-2S or an I/O Device Into the PPAR" *Fujitsu M10-4/Fujitsu M10-4S/SPARC M10-4/SPARC M10-4S Service Manual* "6.2.1 Incorporation of the SPARC M10-4S chassis (possible only in a system with a building block configuration)" "6.5.1 Incorporating a chassis into a physical partition"

Table 7-6 Work Procedure for Active/Cold Replacement of the XSCF BB Control Cable (Connecting the Crossbar Box to the Chassis of the SPARC M12-2S/M10-4S) *(continued)*

Item	Work Procedure	Reference
9	Confirming that there is no problem with the replacement XSCF BB control cable	"6.3.2 Checking the FRU Status After Maintenance"
10	Closing the rack door	

Active/Hot Replacement of the Power Supply Unit

Active/Hot replacement can be performed on the power supply unit. Perform the following procedure to replace it.

Figure 7-8 Flow of Active/Hot Replacement of the Power Supply Unit (*1)

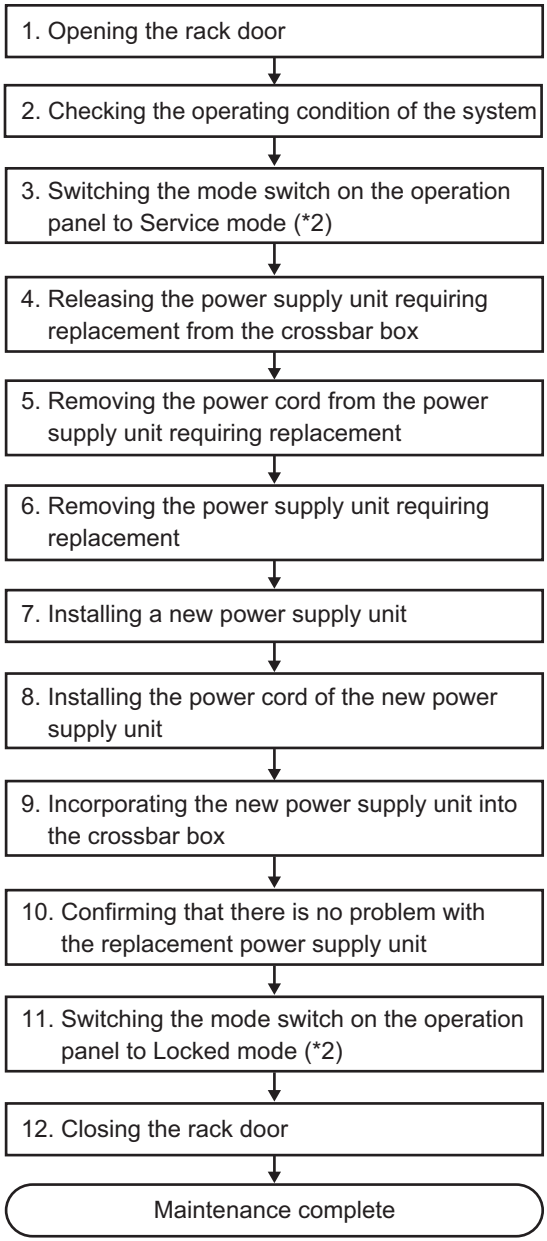

*1 The same procedure is used for inactive/hot replacement of the power supply unit.
*2 The mode switch on the operation panel does not need to be changed in active maintenance.

Table 7-7 Work Procedure for Active/Hot Replacement of the Power Supply Unit (*1)

Item	Work Procedure	Reference
1	Opening the rack door	
2	Checking the operating condition of the system	"4.1.1 Confirming the Hardware Configuration"
3	Switching the mode switch on the operation panel to Service mode (*2)	"5.2.2 Switching the Mode Switch to Service Mode"
4	Releasing the power supply unit requiring replacement from the crossbar box	"5.4.1 Releasing FRUs of the Crossbar Box With the replacefru Command"
5	Removing the power cord from the power supply unit requiring replacement	"5.5.1 Removing the Power Cord"
6	Removing the power supply unit requiring replacement	"13.3 Removing a Power Supply Unit"
7	Installing a new power supply unit	"13.4 Installing a Power Supply Unit"
8	Installing the power cord of a new power supply unit	"6.1.1 Installing the Power Cord"
9	Incorporating a new power supply unit into the crossbar box.	"6.2.1 Restoring the Crossbar Box With the replacefru Command"
10	Confirming that there is no problem with the replacement power supply unit	"6.3.2 Checking the FRU Status After Maintenance"
11	Switching the mode switch on the operation panel to Locked mode (*2)	"6.6 Returning the Mode Switch to Locked Mode"
12	Closing the rack door	

*1 The same procedure is used for inactive/hot replacement of the power supply unit.
*2 The mode switch on the operation panel does not need to be changed in active maintenance.

Active/Hot Replacement of the Fan Unit

Active/Hot replacement can be performed on the fan unit. Perform the following procedure to replace it.

Figure 7-9 Flow of Active/Hot Replacement of the Fan Unit (*1)

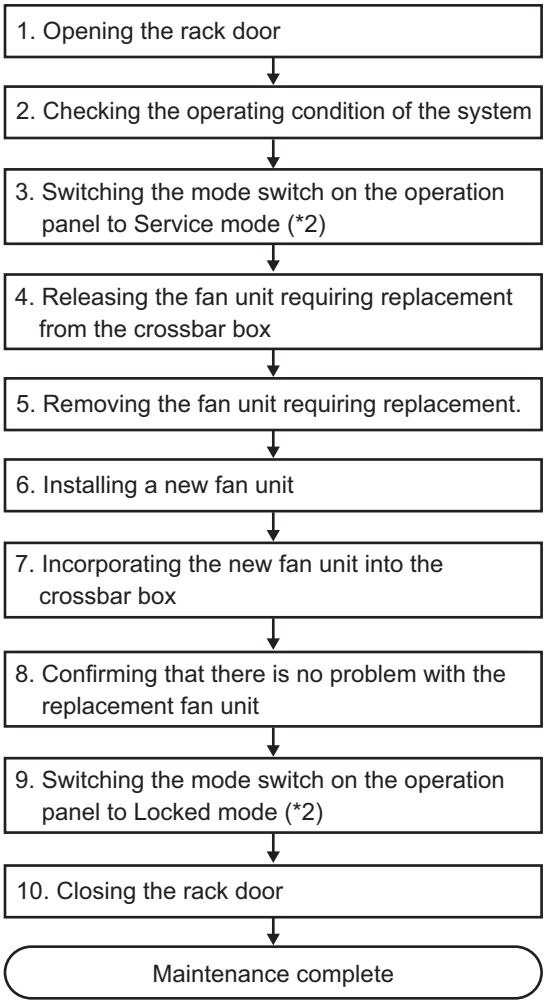

*1 The same procedure is used for inactive/hot replacement of the fan unit.
*2 The mode switch on the operation panel does not need to be changed in active maintenance.

Table 7-8 Work Procedure for Active/Hot Replacement of the Fan Unit (*1)

Item	Work Procedure	Reference
1	Opening the rack door	
2	Checking the operating condition of the system	"4.1.1 Confirming the Hardware Configuration"
3	Switching the mode switch on the operation panel to Service mode (*2)	"5.2.2 Switching the Mode Switch to Service Mode"
4	Releasing the fan unit requiring replacement from the crossbar box	"5.4.1 Releasing FRUs of the Crossbar Box With the replacefru Command"
5	Removing the fan unit requiring replacement.	"15.3 Removing a Fan Unit"
6	Installing a new fan unit	"15.4 Installing a Fan Unit"
7	Incorporating the new fan unit into the crossbar box	"6.2.1 Restoring the Crossbar Box With the replacefru Command"
8	Confirming that there is no problem with the replacement fan unit	"6.3.2 Checking the FRU Status After Maintenance"
9	Switching the mode switch on the operation panel to Locked mode (*2)	"6.6 Returning the Mode Switch to Locked Mode"
10	Closing the rack door	

*1 The same procedure is used for inactive/hot replacement of the fan unit.
*2 The mode switch on the operation panel does not need to be changed in active maintenance.

Active/Hot Replacement of the Dedicated Power Distribution Unit

Active/Hot replacement can be performed on the dedicated power distribution unit. Perform the following procedure to replace it.

Figure 7-10 Flow of Active/Hot Replacement of the Dedicated Power Distribution Unit (*1)

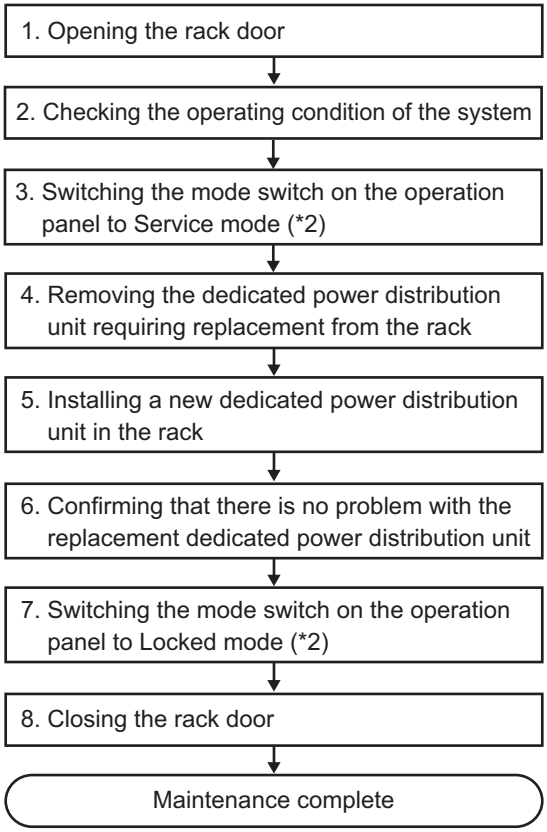

*1 The same procedure is used for inactive/hot replacement of the dedicated power distribution unit.
*2 The mode switch on the operation panel does not need to be changed in active maintenance.

Table 7-9 Work Procedure for the Active/Hot Replacement of the Dedicated Power Distribution Unit (*1)

Item	Work Procedure	Reference
1	Opening the rack door	
2	Checking the operating condition of the system	"4.1.1 Confirming the Hardware Configuration"
3	Switching the mode switch on the operation panel to Service mode (*2)	"5.2.2 Switching the Mode Switch to Service Mode"
4	Removing the dedicated power distribution unit requiring replacement from the rack.	"20.3 Removing the Dedicated Power Distribution Unit"
5	Installing a new dedicated power distribution unit in the rack	"20.4 Installing the Dedicated Power Distribution Unit"
6	Confirming that there is no problem with the replacement dedicated power distribution unit	"4.1.1 Confirming the Hardware Configuration"
7	Switching the mode switch on the operation panel to Locked mode (*2)	"6.6 Returning the Mode Switch to Locked Mode"
8	Closing the rack door	

*1 The same procedure is used for inactive/hot replacement of the dedicated power distribution unit.
*2 The mode switch on the operation panel does not need to be changed in active maintenance.

7.3 Inactive Maintenance Flow

This section describes the workflow for performing the inactive replacement of the XSCF BB control cable and the crossbar cable that connect the crossbar box to the SPARC M12-2S or the SPARC M10-4S.

Note - Maintenance is not available in the inactive/cold state for the FRUs mounted on the crossbar box. During inactive maintenance, the physical partition to which a FRU requiring maintenance belongs is stopped, but other physical partitions may be operating. Therefore, only hot maintenance can be performed with the power cord of the crossbar box connected.

Note - The maintenance workflow and procedure for the following FRUs are the same as those for active maintenance even when the physical partition is in the inactive state. For inactive maintenance of these FRUs, see "7.2 Active Maintenance Flow."
- XSCF unit
- XSCF DUAL control cable
- XSCF BB control cable (connecting crossbar boxes to each other)
- Power supply unit
- Fan unit
- Dedicated power distribution unit mounted on the rack for expanded connection

Figure 7-11 shows FRUs with inactive/cold maintenance enabled.

Figure 7-11 FRUs With Inactive/Cold Maintenance Enabled

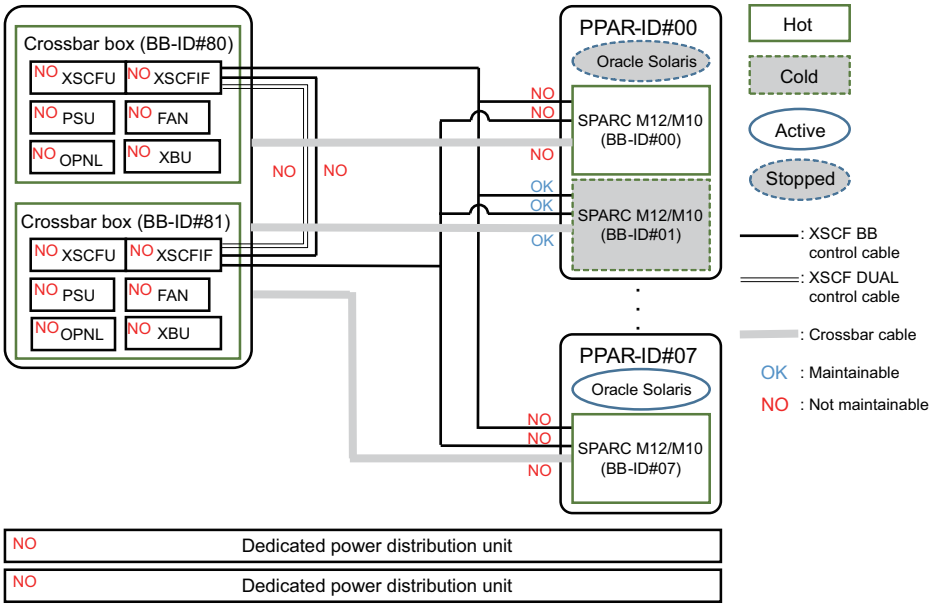

Inactive/Cold maintenance has the following patterns:

- Inactive/Cold Replacement of the XSCF BB Control Cable (Connecting the Crossbar Box to the SPARC M12-2S/M10-4S)
- Inactive/Cold Replacement of the Crossbar Cable

Inactive/Cold Replacement of the XSCF BB Control Cable (Connecting the Crossbar Box to the SPARC M12-2S/M10-4S)

Inactive/Cold replacement can be performed on the XSCF BB control cable connecting the crossbar box to the SPARC M12-2S/M10-4S. Perform the following procedure to replace it.

Figure 7-12 Flow of Inactive/Cold Replacement of the XSCF BB Control Cable (Connecting the Crossbar Box to the SPARC M12-2S/M10-4S)

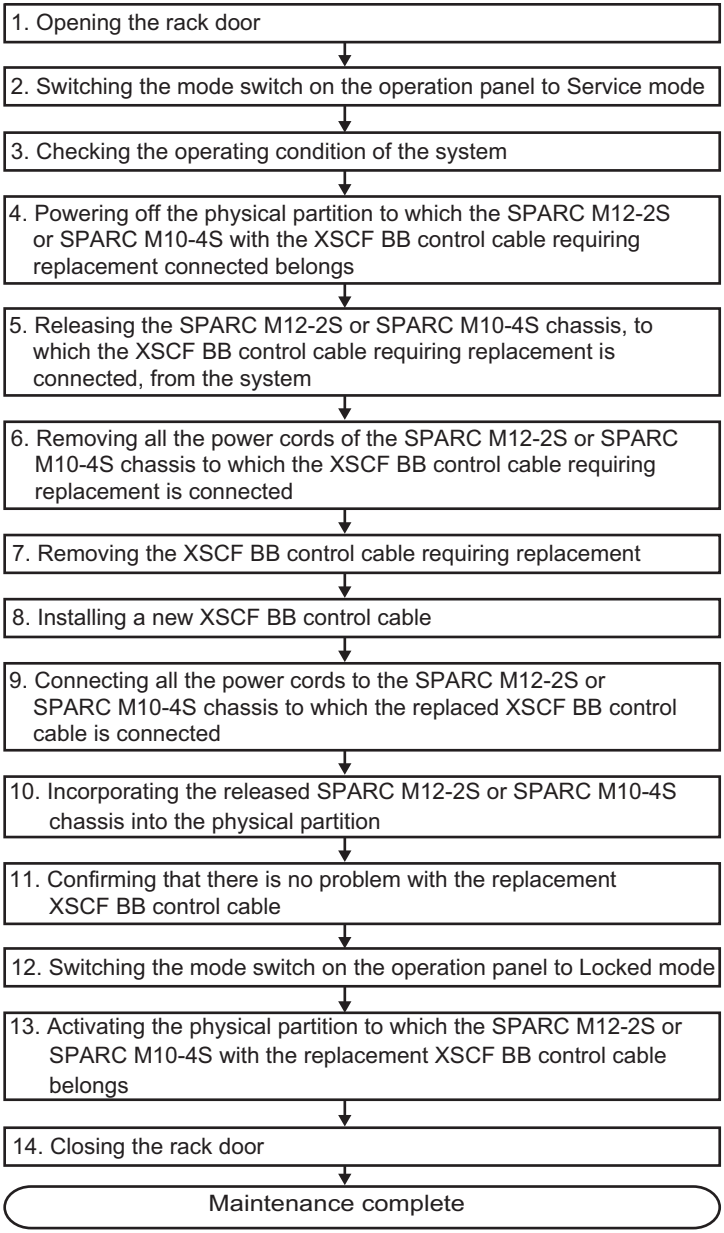

Table 7-10 Work Procedure for Inactive/Cold Replacement of the XSCF BB Control Cable (Connecting the Crossbar Box to the SPARC M12-2S/M10-4S)

Item	Work Procedure	Reference
1	Opening the rack door	
2	Switching the mode switch on the operation panel to Service mode	"5.2.2 Switching the Mode Switch to Service Mode"
3	Checking the operating condition of the system	"5.2.1 Checking the Operating Condition of the Physical Partition or Logical Domain"
4	Powering off the physical partition to which the SPARC M12-2S or SPARC M10-4S with the XSCF BB control cable requiring replacement connected belongs	"5.2.4 Powering Off a Connecting Physical Partition"
5	Releasing the SPARC M12-2S or SPARC M10-4S chassis, to which the XSCF BB control cable requiring replacement is connected, from the system	"5.4.2 Releasing FRUs in the Chassis of the Physical Partition"
6	Removing all the power cords of the SPARC M12-2S or SPARC M10-4S chassis to which the XSCF BB control cable requiring replacement is connected	"Removing the Power Cord of the SPARC M12-2S or the SPARC M10-4S" in "5.5.1 Removing the Power Cord"
7	Removing the XSCF BB control cable requiring replacement	"9.3 Removing an XSCF BB Control Cable"
8	Installing a new XSCF BB control cable	"9.4 Installing an XSCF BB Control Cable"
9	Connecting all the power cords to the SPARC M12-2S or SPARC M10-4S chassis to which the replaced XSCF BB control cable is connected	"Connecting the Power Cord to the SPARC M12-2S or the SPARC M10-4S" in "6.1.1 Installing the Power Cord"
10	Incorporating the released SPARC M12-2S or SPARC M10-4S chassis into the physical partition	"6.2.2 Restoring the FRUs of the Chassis of the Physical Partition"
11	Confirming that there is no problem with the replacement XSCF BB control cable	"6.3.2 Checking the FRU Status After Maintenance"
12	Switching the mode switch on the operation panel to Locked mode	"6.6 Returning the Mode Switch to Locked Mode"
13	Activating the physical partition to which the SPARC M12-2S or SPARC M10-4S with the replacement XSCF BB control cable belongs	"6.7 Powering On the Physical Partition Requiring Maintenance"
14	Closing the rack door	

Inactive/Cold Replacement of the Crossbar Cable

Inactive/Cold replacement can be performed on the crossbar cable. Perform the following procedure to replace it.

Figure 7-13 Flow of Inactive/Cold Replacement of the Crossbar Cable

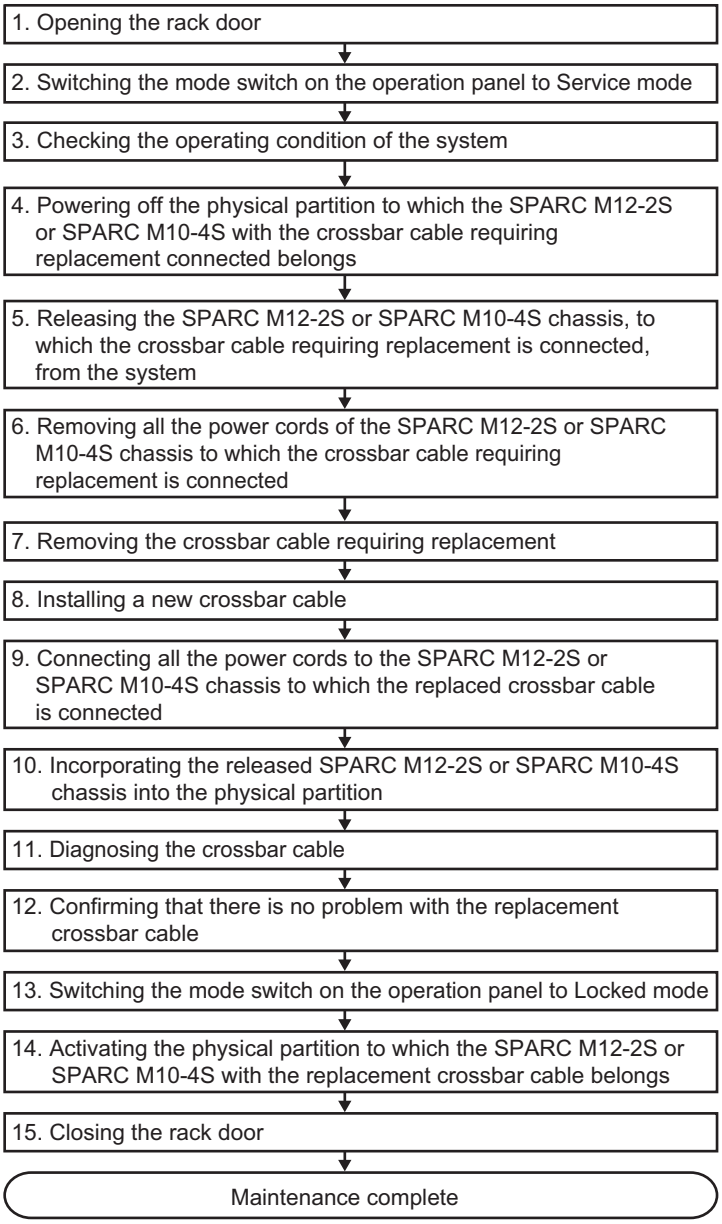

Table 7-11 Work Procedure for Inactive/Cold Replacement of the Crossbar Cable

Item	Work Procedure	Reference
1	Opening the rack door	
2	Switching the mode switch on the operation panel to Service mode	"5.2.2 Switching the Mode Switch to Service Mode"
3	Checking the operating condition of the system	"5.2.1 Checking the Operating Condition of the Physical Partition or Logical Domain"
4	Powering off the physical partition to which the SPARC M12-2S or SPARC M10-4S with the crossbar cable requiring replacement connected belongs	"5.2.4 Powering Off a Connecting Physical Partition"
5	Releasing the SPARC M12-2S or SPARC M10-4S chassis, to which the crossbar cable requiring replacement is connected, from the system	"5.4.2 Releasing FRUs in the Chassis of the Physical Partition"
6	Removing all the power cords of the SPARC M12-2S or SPARC M10-4S chassis to which the crossbar cable requiring replacement is connected	"Removing the Power Cord of the SPARC M12-2S or the SPARC M10-4S" in "5.5.1 Removing the Power Cord"
7	Removing the crossbar cable requiring replacement	"11.3 Removing a Crossbar Cable (Optical)"
8	Installing a new crossbar cable	"11.4 Installing a Crossbar Cable (Optical)"
9	Connecting all the power cords to the SPARC M12-2S or SPARC M10-4S chassis to which the replaced crossbar cable is connected	"Connecting the Power Cord to the SPARC M12-2S or the SPARC M10-4S" in "6.1.1 Installing the Power Cord"
10	Incorporating the released SPARC M12-2S or SPARC M10-4S chassis into the physical partition	"6.2.2 Restoring the FRUs of the Chassis of the Physical Partition"
11	Diagnosing the crossbar cable	"6.3.1 Diagnosing the Crossbar Unit and Crossbar Cables"
12	Confirming that there is no problem with the replacement crossbar cable	"6.3.2 Checking the FRU Status After Maintenance"
13	Switching the mode switch on the operation panel to Locked mode	"6.6 Returning the Mode Switch to Locked Mode"
14	Activating the physical partition to which the SPARC M12-2S or SPARC M10-4S with the replacement crossbar cable belongs	"6.7 Powering On the Physical Partition Requiring Maintenance"
15	Closing the rack door	

7.4 System-Stopped Maintenance Flow

This section describes the replacement workflows in the system-stopped state for FRUs mounted on the crossbar box.

Not only hot maintenance but also cold maintenance is available in the system-stopped state. Stop all the physical partitions and disconnect the power cords of all the chassis to perform system-stopped/cold maintenance for the following FRUs.

- XSCF unit
- XSCF DUAL control cable
- Crossbar unit
- Power supply unit
- XSCF interface unit
- Fan unit
- Fan backplane
- Operation panel
- Cable kit
- Crossbar backplane unit
- Dedicated power distribution unit

It is possible to replace the following FRUs with system-stopped/cold maintenance by stopping all the physical partitions and disconnecting the power cords of all the chassis. It is also possible to replace them by disconnecting only the power cord of the chassis of the SPARC M12-2S/M10-4S with the cable requiring maintenance connected.
The replacement procedure is the same as the replacement procedure in the inactive/cold state. For the replacement workflow and work procedure, see "7.3 Inactive Maintenance Flow."

- XSCF BB control cable
- Crossbar cable

7.4.1 System-Stopped/Hot Maintenance

The FRU replacement procedure in the system-stopped/hot state is the same as the replacement procedure in the active/hot state. For the replacement workflow and work procedure, see "7.2 Active Maintenance Flow."

Figure 7-14 shows FRUs with system-stopped/hot maintenance enabled.

Figure 7-14 FRUs With System-Stopped/Hot Maintenance Enabled

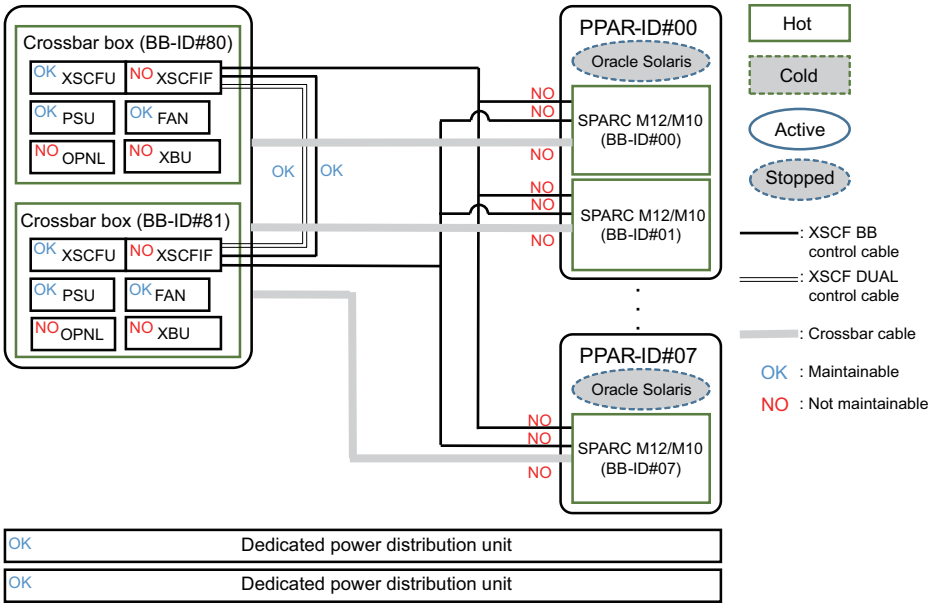

7.4.2 System-Stopped/Cold Maintenance

All the FRUs can be replaced in the maintenance in the system-stopped/cold state and with all the crossbar boxes and the SPARC M12-2S/M10-4S powered off.

Figure 7-15 shows FRUs with system-stopped/cold maintenance enabled.

Figure 7-15 FRUs With System-Stopped/Cold Maintenance Enabled

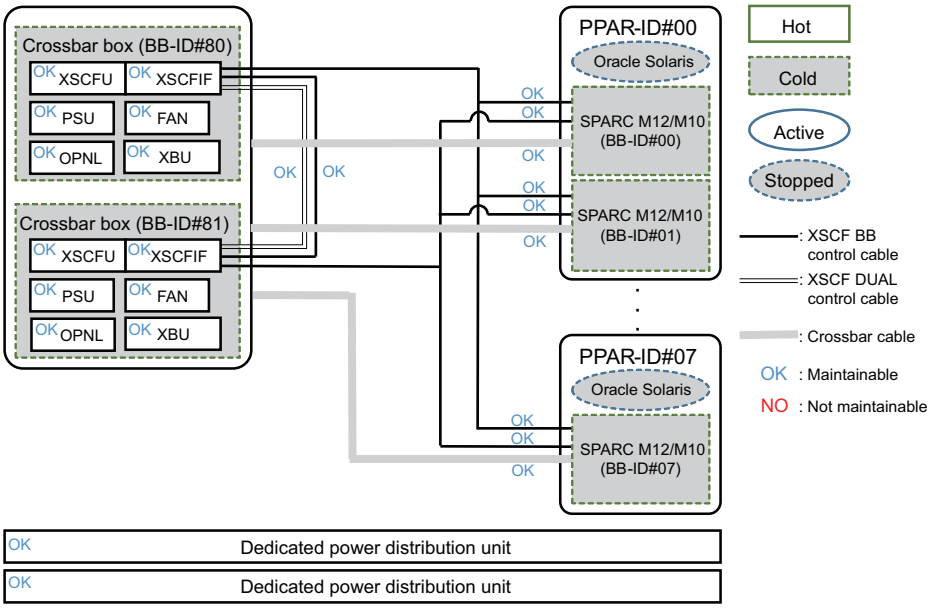

Note - When replacing the microSD card at the same time as the XSCF unit of a SPARC M10 system, replace them during system-stopped/hot maintenance.

Note - The XSCF unit and the interface unit cannot be replaced at the same time. If you replace them at the same time, the system may not start correctly. When replacing both the XSCF unit and the XSCF interface unit, replace only one of them first. After its firmware startup completes, disconnect the power cord of the other unit for replacement.

Note - To remove the XSCF BB control cable, the XSCF DUAL control cable, and the crossbar cable from the chassis and reconnect them, see "Appendix B Cable Connection Information on Building Block Configurations" in the *Fujitsu SPARC M12-2S Installation Guide* or "Appendix B Cable Connection Information on Building Block Configurations" in the *Fujitsu M10-4S/SPARC M10-4S Installation Guide*.

For the workflow and procedure for replacing FRUs in the system-stopped/cold state, see Figure 7-16 and Table 7-12.

Figure 7-16 Workflow for System-Stopped/Cold Replacement

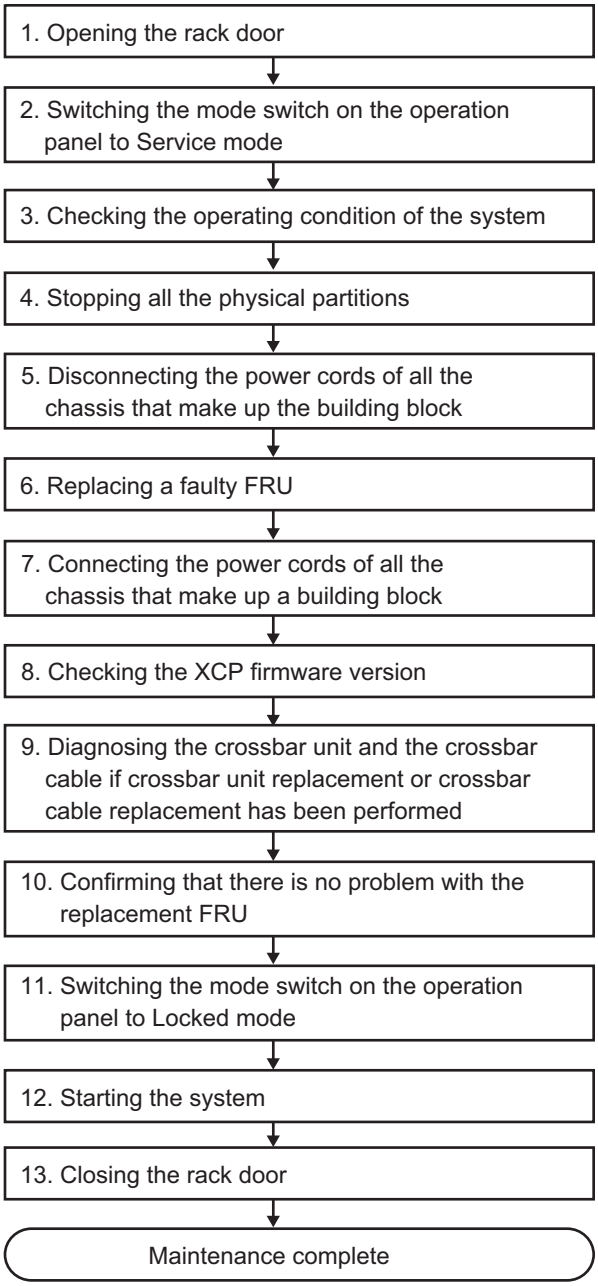

Table 7-12 Work Procedure for System-Stopped/Cold Replacement

Item	Work Procedure	Reference
1	Opening the rack door	
2	Switching the mode switch on the operation panel to Service mode	"5.2.2 Switching the Mode Switch to Service Mode"
3	Checking the operating condition of the system	"5.2.1 Checking the Operating Condition of the Physical Partition or Logical Domain"
4	Stopping all the physical partitions	"5.2.5 Stopping the Entire System"
5	Disconnecting the power cords of all the chassis that make up the building block	"5.5.1 Removing the Power Cord"
6	Replacing a faulty FRU	
	Replacing the XSCF unit	"8.4 Removing the XSCF Unit" "8.5 Switching the microSD Card" "8.6 Installing the XSCF Unit"
	Replacing the XSCF BB control cable	"9.3 Removing an XSCF BB Control Cable" "9.4 Installing an XSCF BB Control Cable"
	Replacing the XSCF DUAL control cable	"10.3 Removing an XSCF DUAL Control Cable" "10.4 Installing an XSCF DUAL Control Cable"
	Replacing the crossbar cable	"11.3 Removing a Crossbar Cable (Optical)" "11.4 Installing a Crossbar Cable (Optical)"
	Replacing the crossbar unit	"12.3 Removing a Crossbar Unit" "12.4 Installing a Crossbar Unit"
	Replacing the power supply unit	"13.3 Removing a Power Supply Unit" "13.4 Installing a Power Supply Unit"
	Replacing the XSCF interface unit.	"14.4 Removing the XSCF Interface Unit" "14.5 Installing the XSCF Interface Unit"
	Replacing the fan unit	"15.3 Removing a Fan Unit" "15.4 Installing a Fan Unit"
	Replacing the fan backplane	"16.3 Removing the Fan Backplane" "16.4 Installing the Fan Backplane"
	Replacing the operation panel	"17.4 Removing the Operation Panel" "17.5 Installing the Operation Panel"
	Replacing the cable kit	"18.3 Removing the Cable Kit" "18.4 Installing the Cable Kit"
	Replacing the crossbar backplane unit	"19.3 Removing the Crossbar Backplane Unit" "19.4 Installing the Crossbar Backplane Unit"
	Replacing the dedicated power distribution unit	"20.3 Removing the Dedicated Power Distribution Unit" "20.4 Installing the Dedicated Power Distribution Unit"
7	Connecting the power cords of all the chassis that make up a building block (*1)(*2)(*3)	"6.1.1 Installing the Power Cord"
8	Checking the XCP firmware version (*4)	"8.7 Checking the XCP Firmware Version"

Table 7-12 Work Procedure for System-Stopped/Cold Replacement *(continued)*

Item	Work Procedure	Reference
9	Diagnosing the crossbar unit and the crossbar cable if crossbar unit replacement or crossbar cable replacement has been performed	"6.3.1 Diagnosing the Crossbar Unit and Crossbar Cables"
10	Confirming that there is no problem with the replacement FRU	"6.3.2 Checking the FRU Status After Maintenance"
11	Switching the mode switch on the operation panel to Locked mode	"6.6 Returning the Mode Switch to Locked Mode"
12	Starting the system	"6.8 Starting the Entire System"
13	Closing the rack door	

*1 If you have replaced an XSCF unit and the XCP firmware version is different between the maintenance part and the existing system, the message "XSCF firmware update now in progress. BB#xx, please wait for XSCF firmware update complete." appears at login to the XSCF. Then, the XCP firmware version will be automatically matched. The version matching takes about 50 minutes. Execute the showlogs monitor command, and check for the "XCP firmware version synchronization completed" message. The displayed message indicates the completion of version matching in an XCP firmware update.
*2 If you have replaced the XSCF unit using the replacement microSD card in "6. Replacing a faulty FRU," the "SCF:Gaps between XBBOX-ID" message may appear in the error log. If so, ignore the message.
*3 If you have replaced an XSCF unit in "6. Replacing a faulty FRU," the "SCF:SCF Diagnosis initialize RTC" message may appear in the error log. If so, ignore the message.
*4 In replacement of a FRU other than an XSCF unit in "6. Replacing a faulty FRU," this work is not required. Even if you switched the microSD card when replacing an XSCF unit, this work is not required.

Chapter 8

Maintaining the XSCF Unit

This chapter describes the procedure for maintaining the XSCF unit mounted in the crossbar box.

- Before Maintaining an XSCF Unit
- Location of the XSCF Unit
- Maintenance Precautions
- Removing the XSCF Unit
- Switching the microSD Card
- Installing the XSCF Unit
- Checking the XCP Firmware Version

8.1 Before Maintaining an XSCF Unit

This chapter only has descriptions of the XSCF unit location, the work of removing and installing XSCF units, and the work of switching the microSD card.
Before removing a FRU, see "Chapter 7 Maintenance Flow" and perform the necessary work items.
For the types of maintenance of the XSCF unit, also see "XSCF unit" in "Table 7-2 Types of Maintenance That Can be Applied to Each Crossbar Box FRU."

8.2 Location of the XSCF Unit

This section describes the location of the XSCF unit.

Figure 8-1 Location of the XSCF Unit

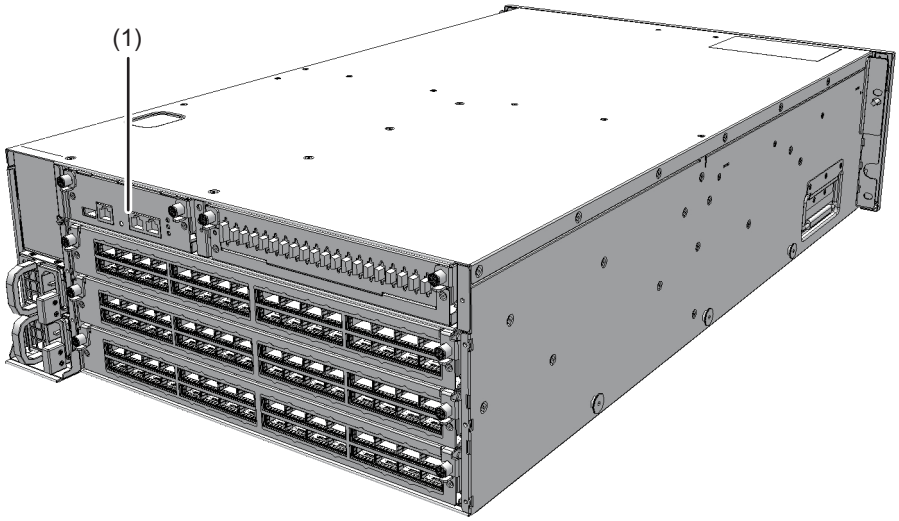

Location Number	Component
1	XSCF unit (XSCFU)

8.3 Maintenance Precautions

Note the following points during maintenance on the XSCF unit.

- Do not replace the XSCF unit and the XSCF interface unit at the same time during system-stopped/cold maintenance. If you replace both the XSCF unit and the XSCF interface unit at the same time, the system will fail to operate normally. Replace the XSCF unit in the hot state and then replace the XSCF interface unit in the cold state.
- Do not mount and use any of the following microSD cards in the XSCF unit in another chassis:
  - the one currently mounted in the crossbar box, or
  - one that was once used as a maintenance part
  This is because these microSD cards store device identification information.
- When replacing the microSD card at the same time as the XSCF unit of a crossbar box in a SPARC M10 system, do not replace them during system-stopped/cold maintenance. Doing so may put the Oracle Solaris clock greatly out of sync at system startup.
  Replace them during system-stopped/hot maintenance.

- If you replace the microSD card along with the XSCF unit, dispose of the microSD card mounted on the old XSCF unit by appropriate means such as cutting it with cutting pliers. The old microSD card stores the user information, IP address, and other information set in the XSCF firmware.

8.4 Removing the XSCF Unit

This section describes the procedure for removing the XSCF unit.
Enable the removal of the XSCF unit before attempting to remove it. For details, see "Chapter 7 Maintenance Flow."

Caution - Before you handle any components, wear a wrist strap to ground any static electricity. If you perform this procedure without a wrist strap, individual components or the overall system may be damaged. For details, see "1.4 Notes Regarding Static Electricity."

---

1. **Remove all the cables connected to the maintenance-target XSCF unit.**
   The cables to be removed are as follows.
   - Serial cable
   - LAN cable

Note - Record the positions of the cables before removing them to ensure that they are reinstalled correctly.

---

2. **Loosen the two screws (A in Figure 8-2) of the XSCF unit and lower the right and left levers to release the XSCF unit.**

Figure 8-2 Positions of Screws and Levers

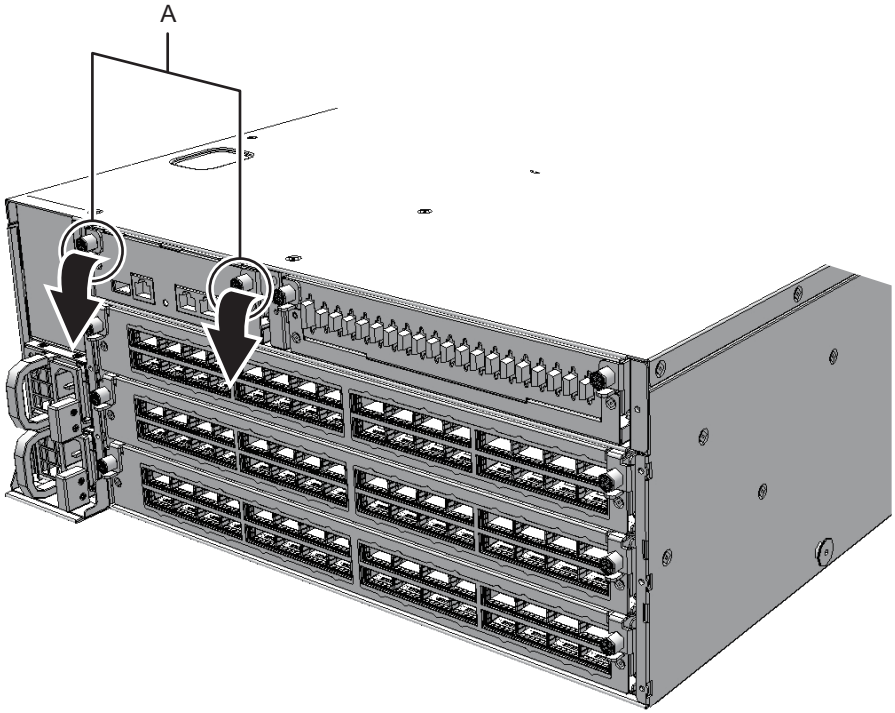

3. **Hold the levers and partially pull out the XSCF unit.**

Figure 8-3 Pulling Out the XSCF Unit

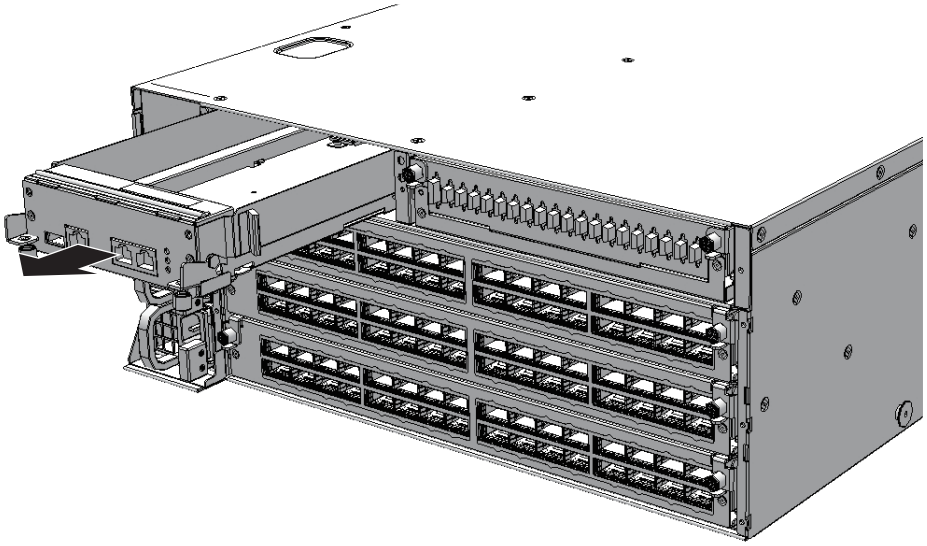

4. **Support the XSCF unit from below with one hand and remove it carefully.**

Note - Place the removed XSCF unit on a grounded antistatic ESD mat.

8.5 Switching the microSD Card

After replacement of the XSCF unit, the firmware version may be different from the one before the replacement. To use the same firmware version as that used before the replacement, remove the microSD card from the XSCF unit being replaced, and install it in the replacement XSCF unit.

Note - Use a Torx screwdriver (T10).

---

1. **Remove the screw (A in Figure 8-4) from the cover of the microSD card that is fixed to the removed XSCF unit.**

Figure 8-4 Screw for the Cover

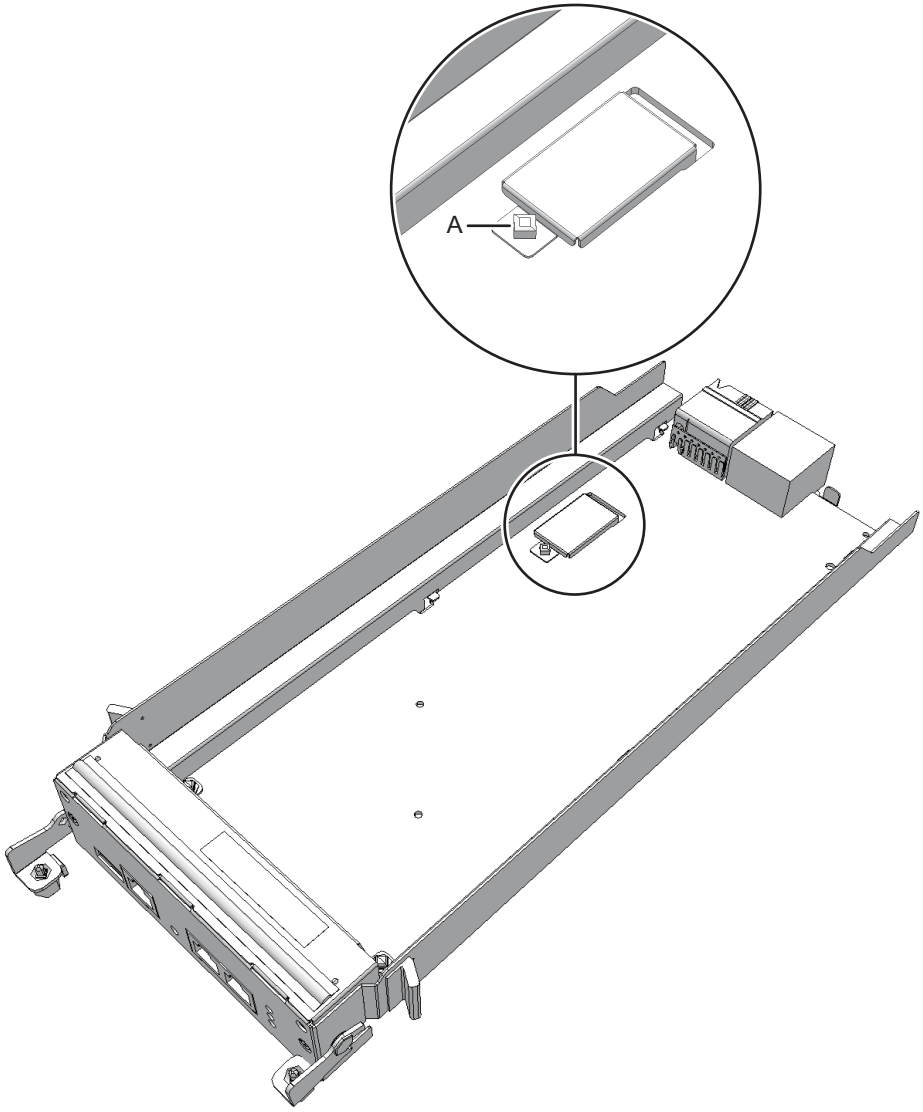

2. **Slide the cover of the microSD card to remove it.**

Figure 8-5 Removing the Cover

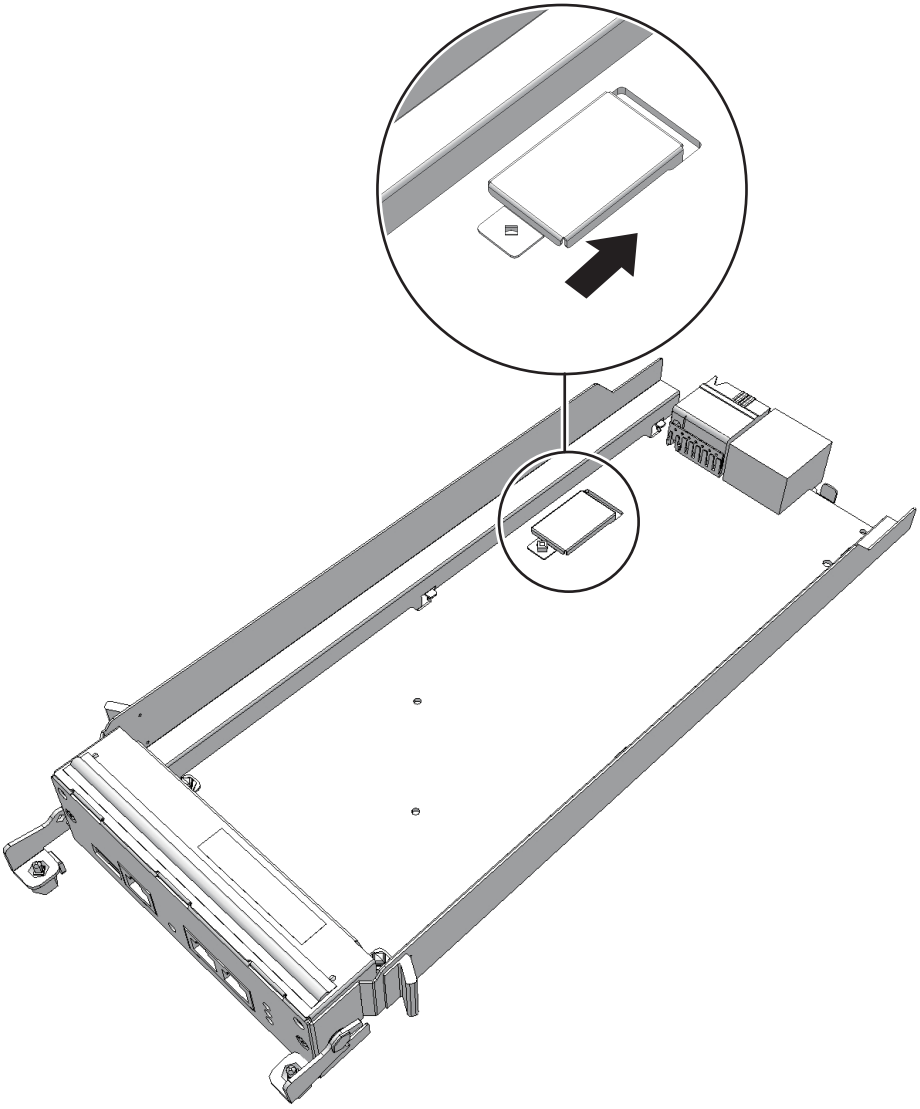

3. **Push in the microSD card slightly with your finger and release it.**
   The microSD card pops up slightly.
4. **Pull out the microSD card horizontally.**

Figure 8-6 Removing the microSD Card

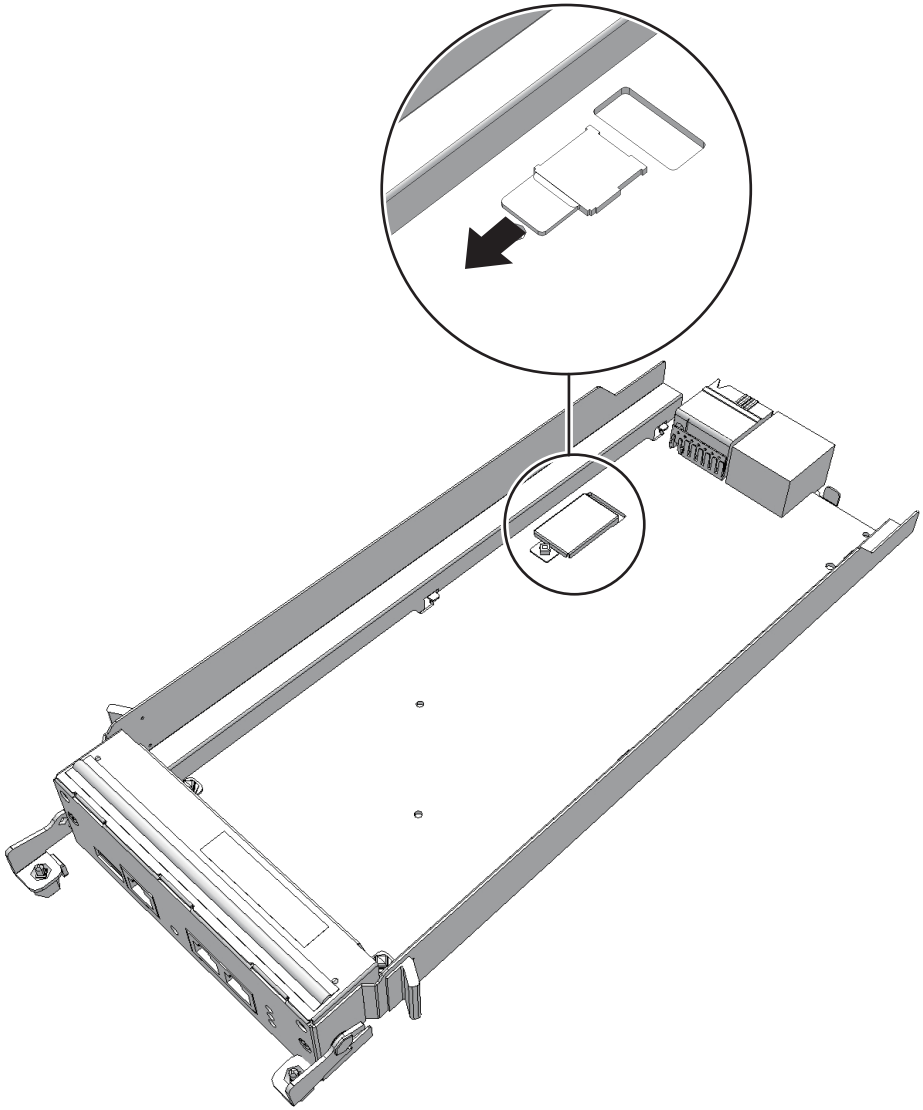

5. **Remove the microSD card from the new XSCF unit.**
   Perform the same procedure as steps 1 to 4.
6. **Insert the microSD card that was removed in step 4 into the microSD card slot of the new XSCF unit. Then, push it in with a finger until it locks in place.**

Note - With the pin surface of the microSD card facing downward, insert the card.

Note - Ensure that the microSD card is firmly inserted and secured to the slot.

Figure 8-7 Installing the microSD Card

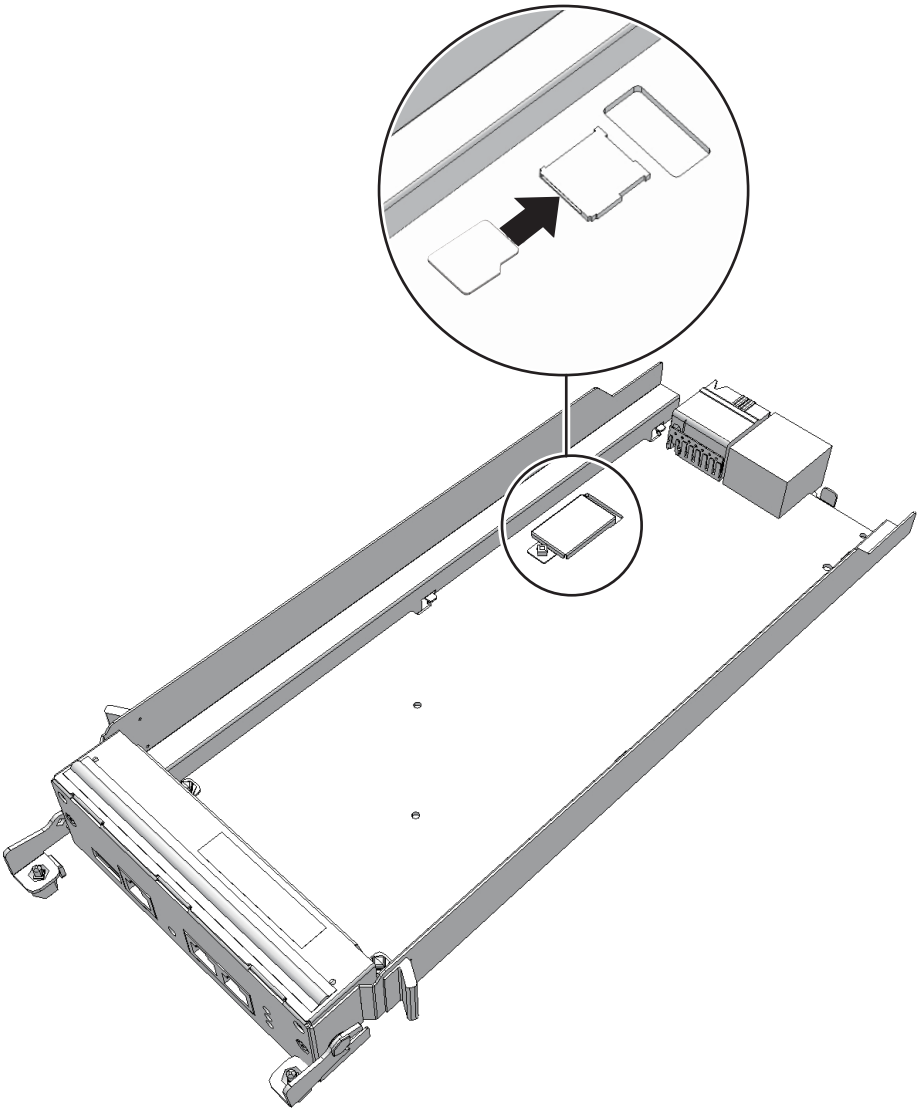

7. **Install the cover of the microSD card and fix it with the screw.**

Note - Install the microSD card that was supplied with the new XSCF unit in the removed XSCF unit, and return them together.

8.6 Installing the XSCF Unit

This section describes the procedure for installing the XSCF unit.

Caution - When mounting an XSCF unit, check the connectors on both the chassis and XSCF unit beforehand to confirm that no pin is bent and all the pins are neatly arranged in lines. If an XSCF unit is mounted with a bent pin in a connector, the chassis or XSCF unit may be damaged. Also, carefully proceed with the work to prevent any pin from being bent.

1. **Carefully insert the XSCF unit into the chassis.**
2. **Raise the right and left levers and tighten the two screws.**
3. **Reconnect all the cables to the XSCF unit.**
   The cables to be reconnected are as follows.
   - Serial cable
   - LAN cable

Note - Reinstall the cables in their original positions by referring to the notes that you made prior to the start of maintenance.

The FRU installation work is completed. See "Chapter 7 Maintenance Flow" to continue maintenance work.

8.7 Checking the XCP Firmware Version

This section describes the procedure for checking the XCP firmware version after XSCF unit maintenance work.
The XCP firmware version of each chassis in the building block configuration must be the same.

1. **Log in to the XSCF, and confirm that the XCP firmware version is the same as before XSCF unit replacement.**
   If the XCP firmware version is different between the maintenance part and the existing system, the message "XSCF firmware update now in progress. BB#xx, please wait for XSCF firmware update complete." appears at login to the XSCF. Then, the XCP firmware version will be automatically matched.

```
Password: *****
XSCF firmware update now in progress. BB#81,
please wait for XSCF firmware update complete.
XSCF>
```

The version matching takes about 50 minutes.

If the above message appears, execute the showlogs monitor command, and check for the "XCP firmware version synchronization completed" message. The message indicates the completion of XCP firmware matching. Then, perform the work below.

```
XSCF> showlogs monitor
Jul 7 14:51:43 SPARCM12 Event: SCF:XCP firmware version synchronization
started
Jul 7 14:51:43 SPARCM12 Event: SCF:XSCF firmware update is started (BB#81)
Jul 7 14:51:43 SPARCM12 Information: /XBBOX#81/XSCFU:SCF:SCF Diagnosis
initialize RTC (*1)
Jul 7 14:51:43 SPARCM12 Alarm: :SCF:Gaps between XBBOX-ID (*2)
Jul 7 14:51:44 SPARCM12 Event: SCF:XSCF ready
Jul 7 15:28:25 SPARCM12 Event: SCF:Standby XSCF Ready(BB#81)
 :
Jul 7 15:40:17 SPARCM12 Event: SCF:XSCF update has been completed (BBID=81,
bank=0)
Jul 7 15:40:18 SPARCM12 Event: SCF:XCP update has been completed (XCP
version=3080:last version=3090)
Jul 7 15:40:18 SPARCM12 Event: SCF:XSCF firmware update has been completed
(BB#81)
Jul 7 15:40:18 SPARCM12 Event: SCF:XCP firmware version synchronization
completed
```

*1 If the "SCF :SCF Diagnosis initialize RTC" message appears, ignore the message.

*2 If the "SCF :Gaps between XBBOX-ID" message appears, ignore the message.

2. **Execute the version command to check the firmware version on every crossbar box and SPARC M12-2S/M10-4S.**

   The command displays the overall XCP firmware version.

   Confirm that the XCP firmware version on each crossbar box and SPARC M12-2S/M10-4S is the same as the master XSCF version.

   If they are the same, steps 3 and later are not necessary. If they are not the same, perform steps 3 and later.

```
XSCF> version -c xcp
XBBOX#80-XSCF#0 (Master)
CP0 (Current): xxxx
CP1 (Reserve): xxxx
BBOX#81-XSCF#0 (Standby)
CP0 (Current): xxxx
CP1 (Reserve): xxxx
BB#00-XSCF#0
XCP0 (Current): xxxx
XCP1 (Reserve): xxxx
BB#01-XSCF#0
XCP0 (Current): xxxx
XCP1 (Reserve): xxxx
BB#02-XSCF#0
XCP0 (Current): xxxx
```

```
XCP1 (Reserve): xxxx
BB#03-XSCF#0
XCP0 (Reserve): xxxx
XCP1 (Current): xxxx
```

3. **If the XCP firmware version is not the same, execute the getflashimage -l command to check whether the XCP image file of the version before XSCF unit replacement is saved on the master XSCF.**
   If not saved, import the XCP image file.

   The following example imports the XCP image file of the version before XSCFU replacement.

```
XSCF> getflashimage -l
Existing versions:
      Version                 Size  Date
      BBXCP3060.tar.gz   107650264  Thu Aug 06 08:54:02 JST 2020
XSCF> getflashimage file:///media/usb_msd/xxxx/BBXCP3080.tar.gz
```

4. **Execute the flashupdate -c sync command to match the XCP firmware version on all crossbar boxes and SPARC M12-2S/M10-4S units.**
   Match the XCP firmware version with the master XSCF version.

```
XSCF> flashupdate -c sync
XCP update is started. [3600sec]
  0..... 30..... 60..... 90.....120.....150.....180.....210.....240.....
270.....300.....330.....360.....390.....420.....450.....480.....510.....
```

5. **Execute the showlogs monitor command, and check for the "XCP update has been completed" message. The displayed message indicates the completion of the XCP firmware update.**

```
XSCF> showlogs monitor
Sep 8 13:39:31 SPARCM12 Event: SCF:XCP update is started (XCP version=3080:
last version=3080)
Sep 8 13:41:55 SPARCM12 Event: SCF:Updating XCP:Preparing to update XSCF
(BBID=81, bank=1)
Sep 8 13:42:20 SPARCM12 Event: SCF:Updating XCP:Updating XSCF (BBID=81, XSCF
version=03080000)
Sep 8 13:46:35 SPARCM12 Event: SCF:Updating XCP:XSCF updated (BBID=81, bank=1)
Sep 8 13:46:35 SPARCM12 Event: SCF:Updating XCP:XSCF bank has changed
(BBID=81, bank=1, XCP version=3080:last version=3090)
Sep 8 13:52:32 SPARCM12 Event: SCF:Standby XSCF Ready(BB#81)
Sep 8 13:53:16 SPARCM12 Event: SCF:Updating XCP:Preparing to update XSCF
(BBID=81, bank=0)
Sep 8 13:53:39 SPARCM12 Event: SCF:Updating XCP:Updating XSCF (BBID=81, XSCF
version=03080000)
Sep 8 13:57:35 SPARCM12 Event: SCF:Updating XCP:XSCF updated (BBID=81, bank=0)
Sep 8 14:03:16 SPARCM12 Event: SCF:XCP update has been completed (XCP
version=3080:last version=3080)
```

6. **Execute the version command to check the XCP firmware version on every crossbar box and SPARC M12-2S/M10-4S.**

```
XSCF> version -c xcp
XBBOX#80-XSCF#0 (Master)
XCP0 (Current): xxxx
XCP1 (Reserve): xxxx
XBBOX#81-XSCF#0 (Standby)
XCP0 (Current): xxxx
XCP1 (Reserve): xxxx
BB#00-XSCF#0
XCP0  (Current):  xxxx
XCP1 (Reserve) :  xxxx
ÛB#01-XSCF#0
XCP0 (Current): xxxx
XCP1 (Reserve): xxxx
BB#02-XSCF#0
XCP0 (Current): xxxx
XCP1 (Reserve): xxxx
BB#03-XSCF#0
XCP0 (Reserve): xxxx
XCP1 (Current): xxxx
```

Chapter 9

Maintaining the XSCF BB Control Cables

This chapter describes the procedure for maintaining the XSCF BB control cables.

- Before Maintaining an XSCF BB Control Cable
- Configuration of the XSCF BB Control Ports
- Removing an XSCF BB Control Cable
- Installing an XSCF BB Control Cable

9.1 Before Maintaining an XSCF BB Control Cable

This chapter only has descriptions of the XSCF BB control port configuration and the work of removing and installing XSCF BB control cables.
Before removing a FRU, see "Chapter 7 Maintenance Flow" and perform the necessary work items.
For the types of maintenance on XSCF BB control cables, also see "XSCF BB control cable" in "Table 7-2 Types of Maintenance That Can be Applied to Each Crossbar Box FRU."

9.2 Configuration of the XSCF BB Control Ports

This section describes configuration and location of the XSCF BB control ports.
The XSCF BB control cables are used to connect the XSCFs mounted in the chassis of the physical partition or the crossbar box.

Figure 9-1 Location of XSCF BB Control Ports (SPARC M12-2S)

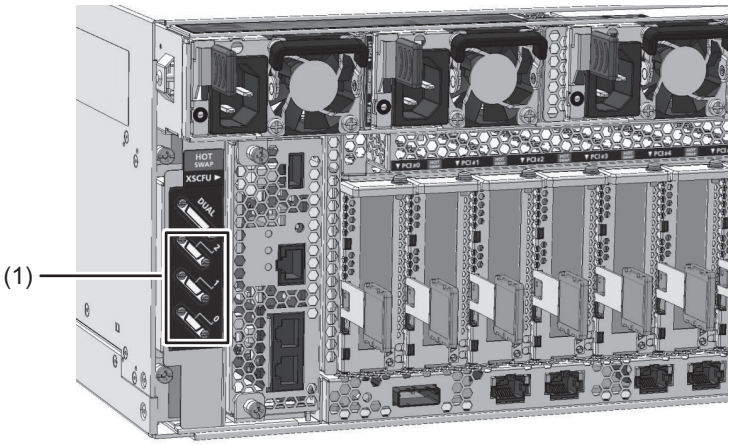

Figure 9-2 Location of XSCF BB Control Ports (SPARC M10-4S)

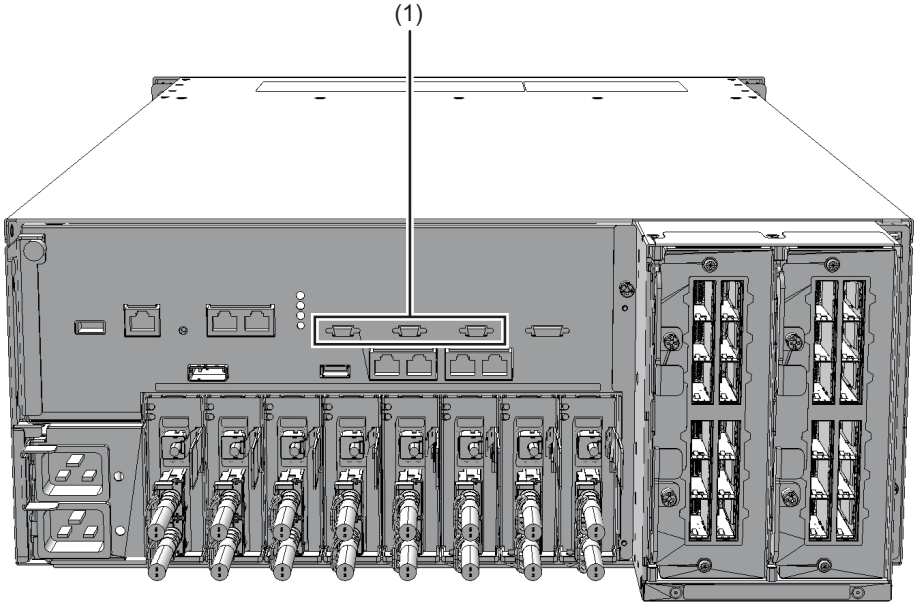

Figure 9-3 Location of XSCF BB Control Ports (Crossbar Box)

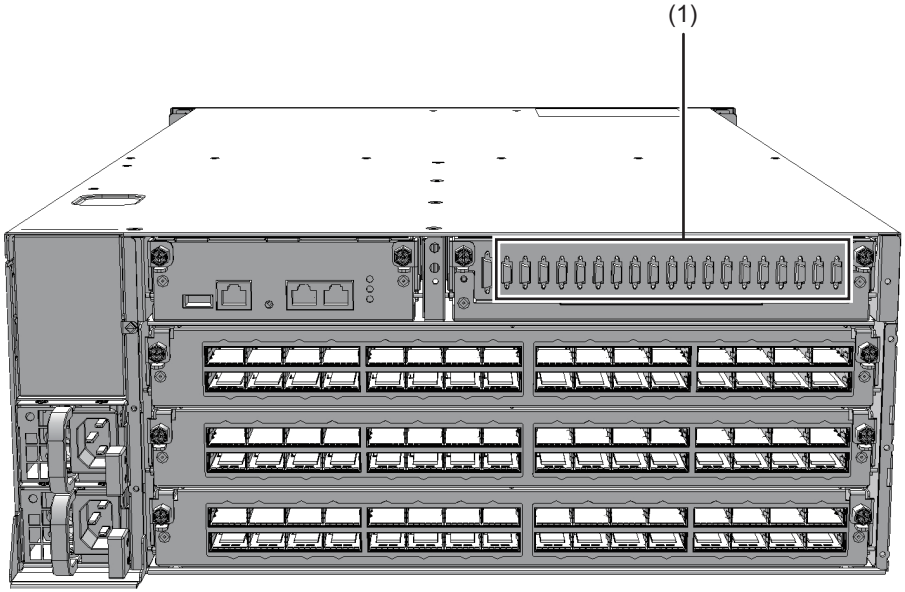

Location Number	Connection Port
1	XSCF BB control port

9.3 Removing an XSCF BB Control Cable

This section describes the procedure for removing the XSCF BB control cables. Enable removal of the XSCF BB control cables before attempting to remove them. For details, see "Chapter 7 Maintenance Flow."

Caution - Before you handle the XSCF BB control cables, wear a wrist strap to ground any static electricity. If you perform this procedure without a wrist strap, individual components or the overall system may be damaged. For details, see "1.4 Notes Regarding Static Electricity."

1. **Remove the XSCF BB control cable from the chassis of the physical partition or the crossbar box.**
   Pull out the XSCF BB control cable while pushing the lock release buttons (1 in Figure 9-4, and A in Figure 9-5 and Figure 9-6) on both sides of the cable.

Note - The cables on the rear of the crossbar box are bundled together and fastened to the right-hand cable support with a hook-and-loop fastener. When removing the XSCF BB control cables, remove the hook-and-loop fastener from the cable support.

Figure 9-4 Removing the XSCF BB Control Cables (SPARC M12-2S)

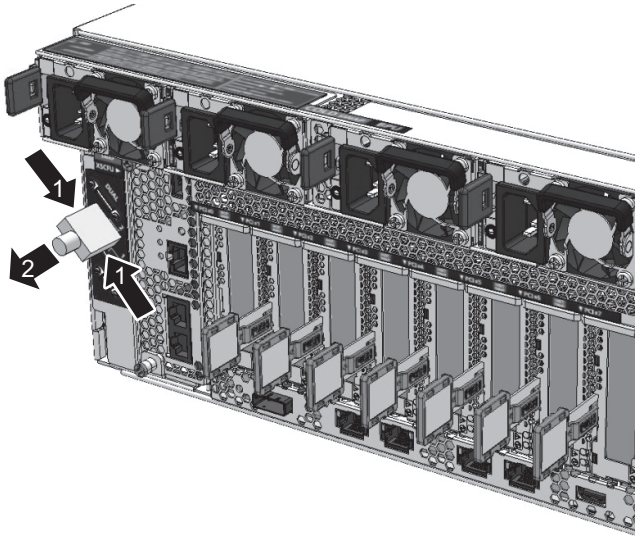

Figure 9-5 Removing the XSCF BB Control Cables (SPARC M10-4S)

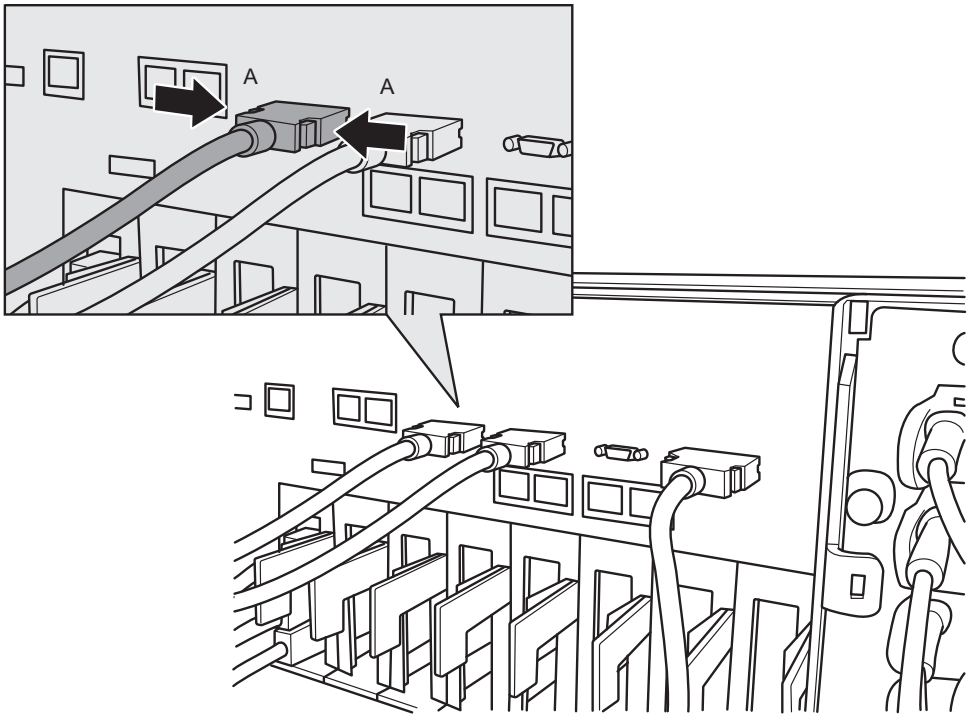

Figure 9-6 Removing the XSCF BB Control Cables (Crossbar Box)

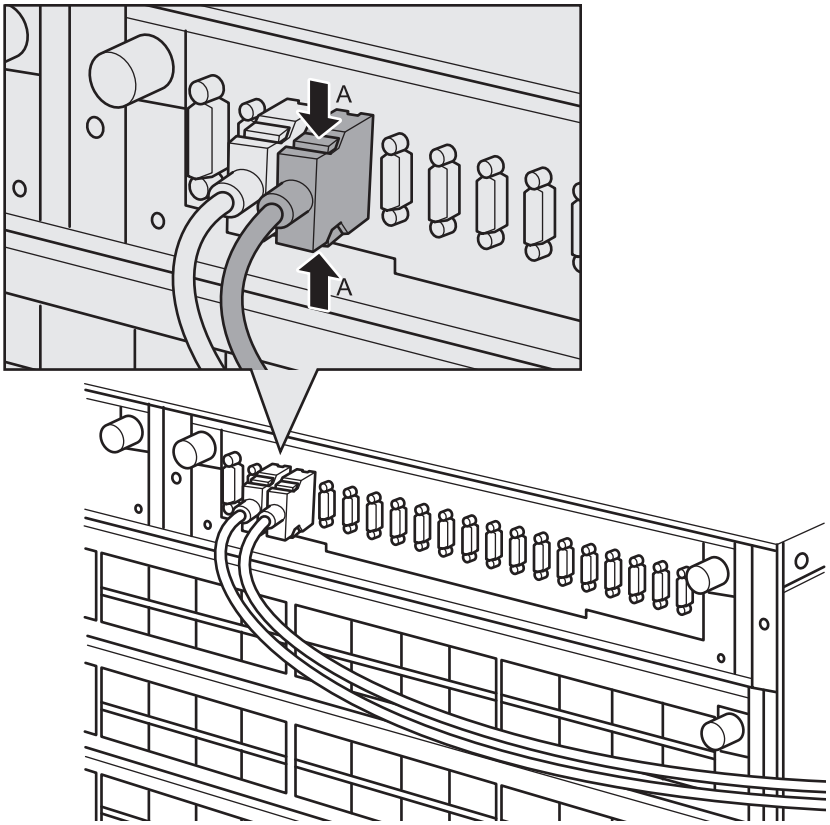

2. **Remove the XSCF BB control cables from the other chassis.**
   Pull out the XSCF BB control cable while pushing the lock release buttons on the both sides of the cable.

9.4 Installing an XSCF BB Control Cable

This section describes the procedure for installing the XSCF BB control cables.

1. **Attach the supplied connection destination label to the new replacement XSCF BB control cable.**
   For the new XSCF BB control cable, use the same type of label as the one on the cable requiring maintenance and write the same port numbers on it.
2. **Connect the ends of the XSCF BB control cable to the chassis of the physical partition or the crossbar box.**

Note - Check that the XSCF BB control cables are correctly connected and secure.

Note - After connecting the XSCF BB control cable, use a hook-and-loop fastener to bundle the cables together and secure them to the rear cable support.

The FRU installation work is completed. See "Chapter 7 Maintenance Flow" to continue maintenance work.

Chapter 10

Maintaining the XSCF DUAL Control Cables

This chapter describes the procedure for maintaining the XSCF DUAL control cables.

- Before Maintaining an XSCF DUAL Control Cable
- Configuration of the XSCF DUAL Control Ports
- Removing an XSCF DUAL Control Cable
- Installing an XSCF DUAL Control Cable

10.1 Before Maintaining an XSCF DUAL Control Cable

This chapter only has descriptions of the XSCF DUAL control port configuration and the work of removing and installing XSCF DUAL control cables.
Before removing a FRU, see "Chapter 7 Maintenance Flow" and perform the necessary work items.
For the types of maintenance on XSCF DUAL control cables, also see "XSCF DUAL control cable" in "Table 7-2 Types of Maintenance That Can be Applied to Each Crossbar Box FRU."

10.2 Configuration of the XSCF DUAL Control Ports

This section describes configuration and location of the XSCF DUAL control ports.
The XSCF DUAL control cable is used to connect the master XSCF and a standby XSCF that are mounted on a crossbar box so as to duplicate the XSCF.

Figure 10-1 Location of the XSCF DUAL Control Port

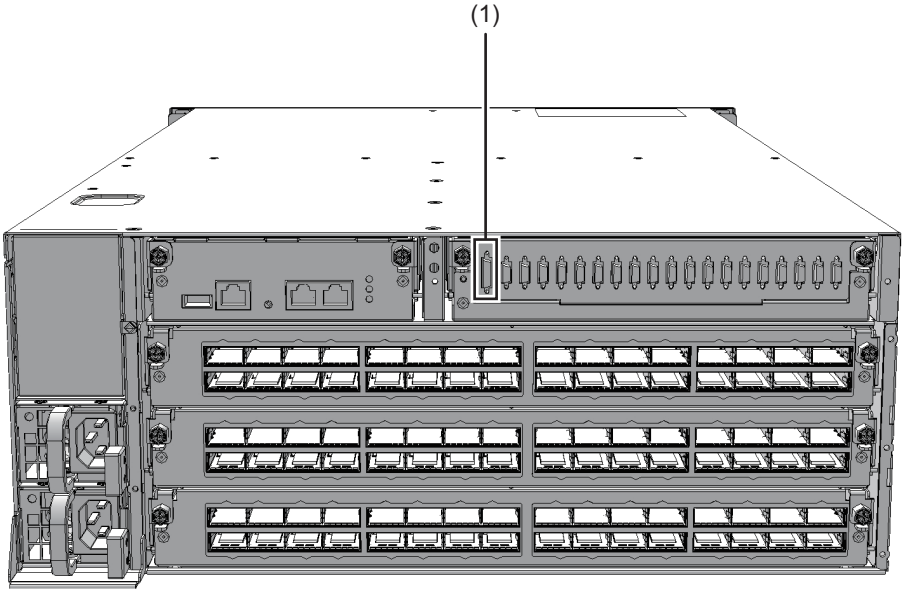

Location Number	Connection Port
1	XSCF DUAL control port

10.3 Removing an XSCF DUAL Control Cable

This section describes the procedure for removing an XSCF DUAL control cable. Enable the removal of the XSCF DUAL control cables before attempting to remove them. For details, see "Chapter 7 Maintenance Flow."

Caution - Before you handle the XSCF DUAL control cables, wear a wrist strap to ground any static electricity. If you perform this procedure without a wrist strap, individual components or the overall system may be damaged. For details, see "1.4 Notes Regarding Static Electricity."

1. **Remove the XSCF DUAL control cable from the crossbar box.**
   Pull out the XSCF DUAL control cable while pushing the lock release buttons (A in Figure 10-2) on the both sides of the cable.

Note - The cables on the rear of the crossbar box are bundled together and fastened to the right-hand cable support with a hook-and-loop fastener. Therefore, to remove the XSCF DUAL control cables, remove the hook-and-loop fastener from the cable support.

Figure 10-2 Removing the XSCF DUAL Control Cable

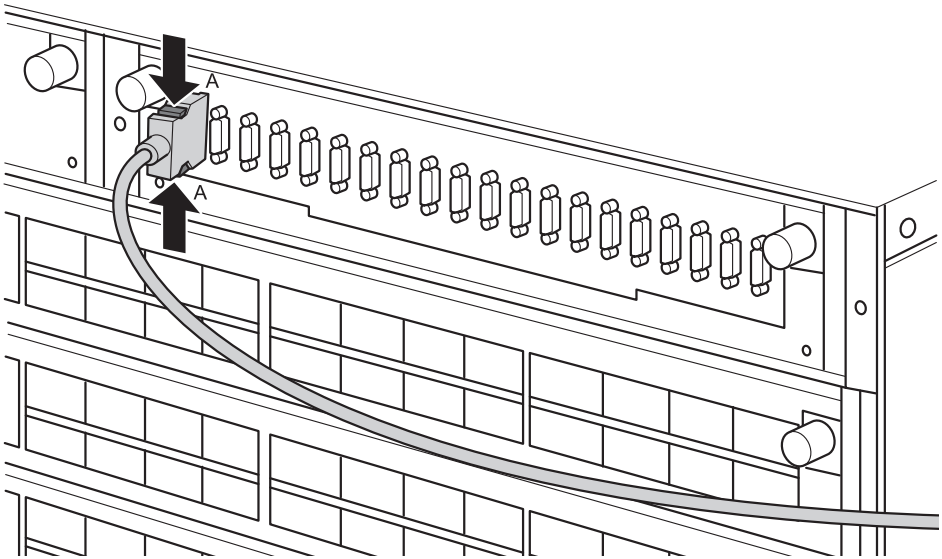

2. **Remove the XSCF DUAL control cable from the other chassis.**
   Pull out the XSCF DUAL control cable while pushing the lock release buttons on the both sides of the cable.

10.4 Installing an XSCF DUAL Control Cable

This section describes the procedure for installing an XSCF DUAL control cable.

1. **Attach the supplied connection destination label to the replacement XSCF DUAL control cable.**
   For the new XSCF DUAL control cable, use the same type of label as the one on the cable requiring maintenance and write the same port numbers on it.
2. **Connect the ends of the XSCF DUAL control cable to the crossbar box.**

Note - Check that XSCF DUAL control cable is correctly connected and secure.

Note - After connecting the XSCF DUAL control cable, use a hook-and-loop fastener to

bundle the cables together and fasten them to rear cable support.

The FRU installation work is completed. See "Chapter 7 Maintenance Flow" to continue maintenance work.

Chapter 11

Maintaining the Crossbar Cables (Optical)

This chapter describes the procedure for maintaining the crossbar cables (optical).

- Before Maintaining a Crossbar Cable (Optical)
- Configuration of Connection Ports for Crossbar Cables (Optical)
- Removing a Crossbar Cable (Optical)
- Installing a Crossbar Cable (Optical)

11.1 Before Maintaining a Crossbar Cable (Optical)

This chapter only has descriptions of the configuration of connection ports for crossbar cables (optical) and the work of removing and installing crossbar cables (optical).
Before removing a FRU, see "Chapter 7 Maintenance Flow" and perform the necessary work items.
For the types of maintenance on crossbar cables (optical), also see "Crossbar cable" in "Table 7-2 Types of Maintenance That Can be Applied to Each Crossbar Box FRU."

11.2 Configuration of Connection Ports for Crossbar Cables (Optical)

This section describes the configuration and locations of the connection ports for crossbar cables (optical).
The crossbar cables (optical) are used to connect the chassis of the physical partition to a crossbar box in a building block configuration (with a crossbar box).
Each crossbar cable (optical) has a number that corresponds to a port number on the SPARC M12/M10 chassis.

Since one port number is assigned to each pair of ports, replace crossbar cables (optical) in pairs.

Figure 11-1 Connection Ports for Crossbar Cables (SPARC M12-2S)

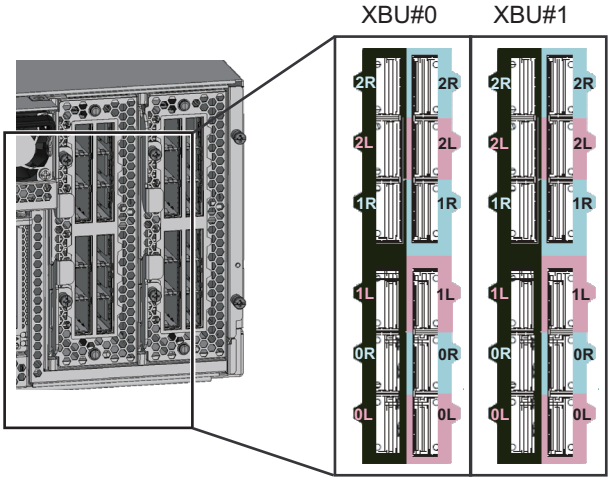

Figure 11-2 Connection Ports for Crossbar Cables (Optical) (SPARC M10-4S)

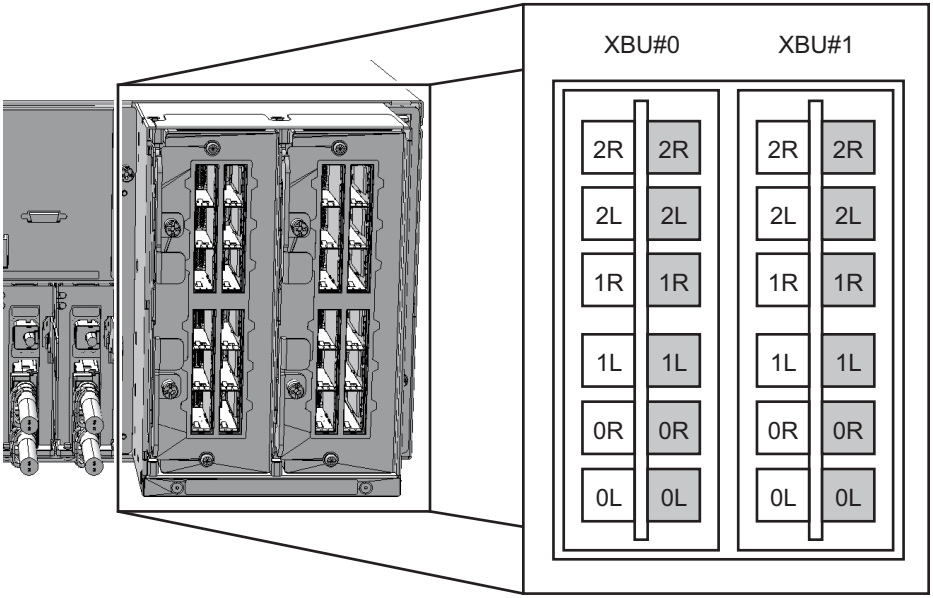

Figure 11-3 Connection Ports for Crossbar Cables (Optical) (Crossbar Box)

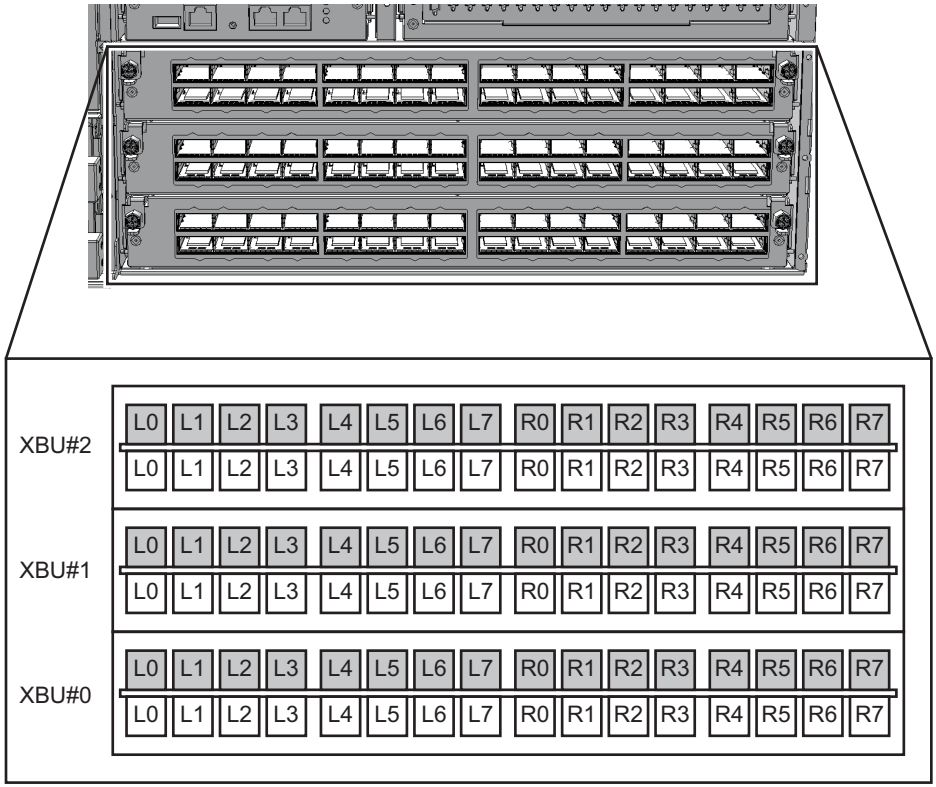

Figure 11-4 Crossbar Cables (SPARC M12-2S)

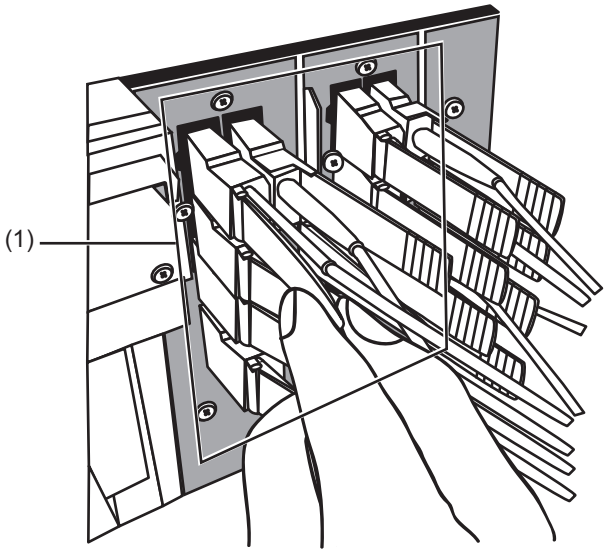

Figure 11-5 Crossbar Cables (Optical) (SPARC M10-4S)

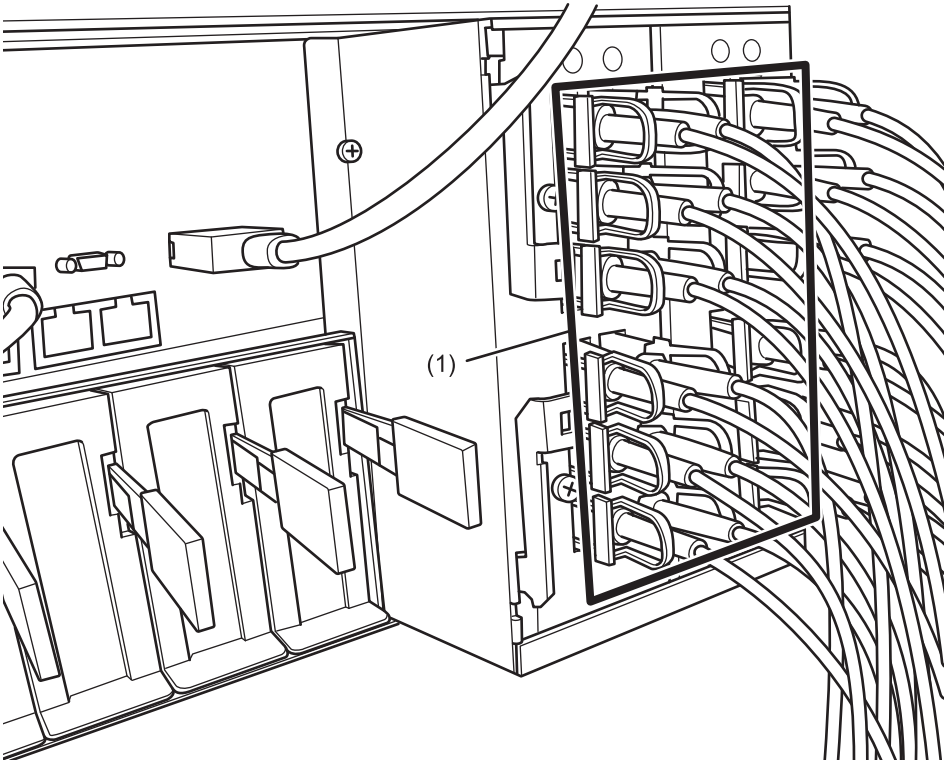

Figure 11-6 Crossbar Cables (Optical) (Crossbar Box)

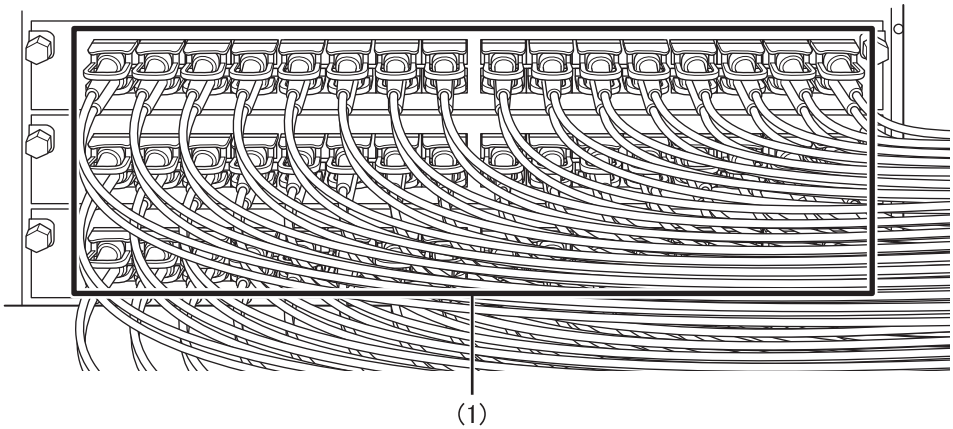

Location Number	Component
1	Crossbar cables (optical) (CBL)

11.3 Removing a Crossbar Cable (Optical)

This section describes the procedure for removing the crossbar cables (optical). Enable the removal of the crossbar cables (optical) before attempting to remove them. For details, see "Chapter 7 Maintenance Flow."

Caution - Before you handle the crossbar control cables (optical), wear a wrist strap to ground any static electricity. If you perform this procedure without a wrist strap, individual components or the overall system may be damaged. For details, see "1.4 Notes Regarding Static Electricity."

---

1. **Remove the two crossbar cables (optical) from the chassis of the physical partition.**
   Remove the crossbar cable (optical) by holding the tab (Figure 11-7 and A in Figure 11-8) of the cable and pulling it straight in the direction of the arrow. At this time, do not hold the cable part when pulling the crossbar cable.

Caution - Pulling the cable part without the connector lock completely released may cause damage.

Figure 11-7 Removing the Crossbar Cables (SPARC M12-2S)

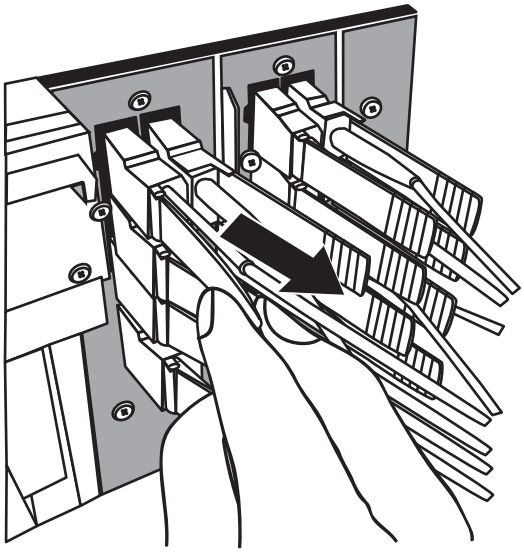

Figure 11-8 Removing the Crossbar Cables (Optical) (SPARC M10-4S)

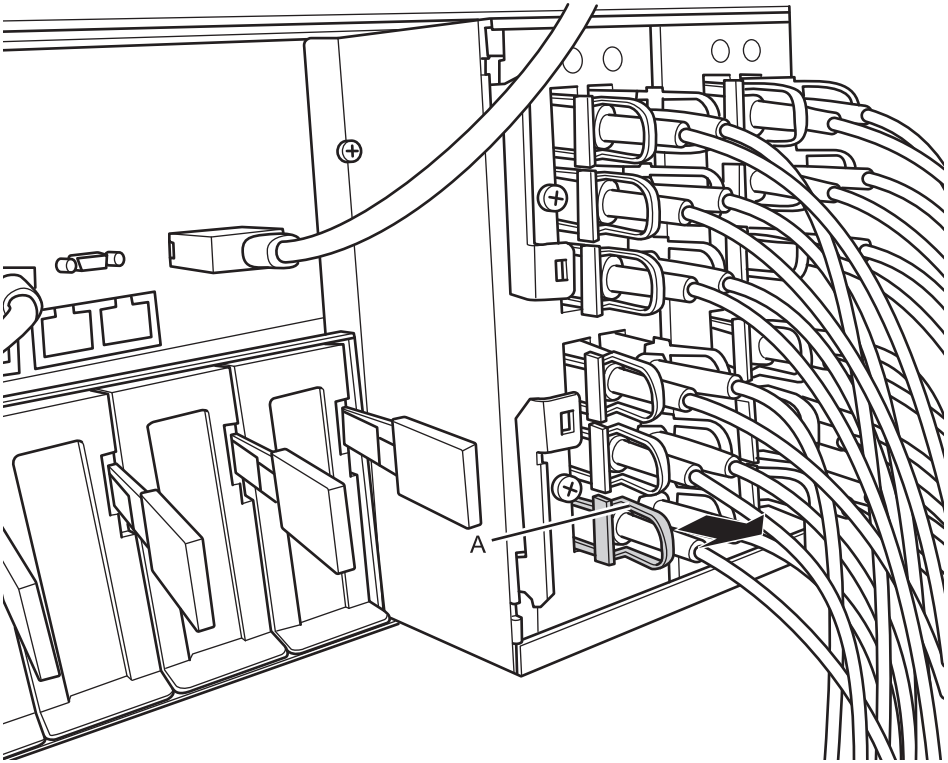

2. **Remove the other pair of crossbar cables (optical) from the crossbar box.**
   Remove the crossbar cable (optical) by holding the tab (A in Figure 11-9) of the cable and pulling it straight in the direction of the arrow. At this time, do not hold the cable part when pulling the crossbar cable.

Caution - Pulling the cable part without the connector lock completely released may cause damage.

Note - There is no problem if you remove the crossbar cables at the crossbar box while electricity is supplied.

Note - The cables on the rear of the crossbar box are bundled together and fastened to the right-hand cable support with a hook-and-loop fastener. Therefore, to remove the crossbar cables (optical), remove the hook-and-loop fastener from the cable support.

Figure 11-9 Removing the Crossbar Cables (Optical) (Crossbar Box)

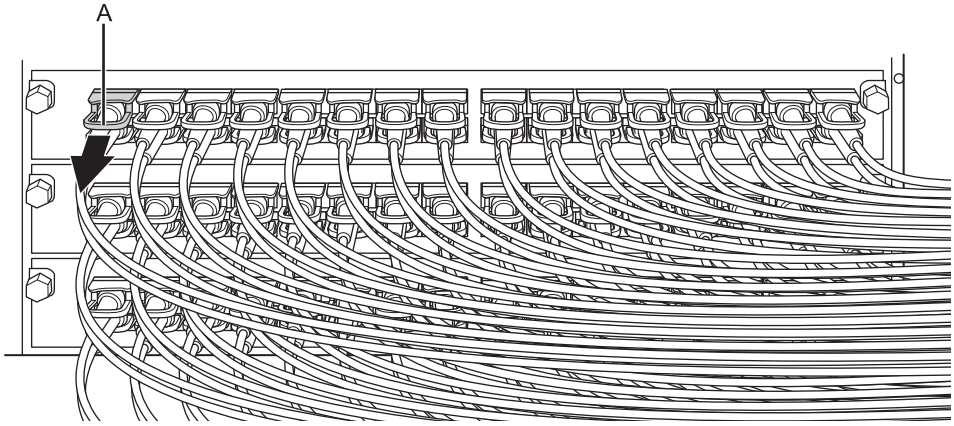

11.4 Installing a Crossbar Cable (Optical)

This section describes the procedure for connecting the crossbar cables (optical).

1. **Attach the supplied connection destination label to the new replacement crossbar cable (optical).**
   For the new crossbar cable (optical), use the same type of label as the one on the cable requiring maintenance and write the same port numbers on it.

2. **Connect a pair of crossbar cables (optical) to the chassis of the physical partition and the crossbar box.**
   Connect the crossbar cables to the locations of crossbar unit ports described on the label.

   There are three types of crossbar cables (optical). Connect crossbar cables of the same type to the same port numbers.

   You can distinguish the type of crossbar cable by the tab shape. (See Figure 11-10.)

Note - There is no problem if you connect the crossbar cables (optical) at the crossbar box while electricity is supplied.

Caution - If you insert a connector with the tab pulled, the connector may be damaged.

Figure 11-10 Crossbar Cable (Optical) Shapes and Tabs

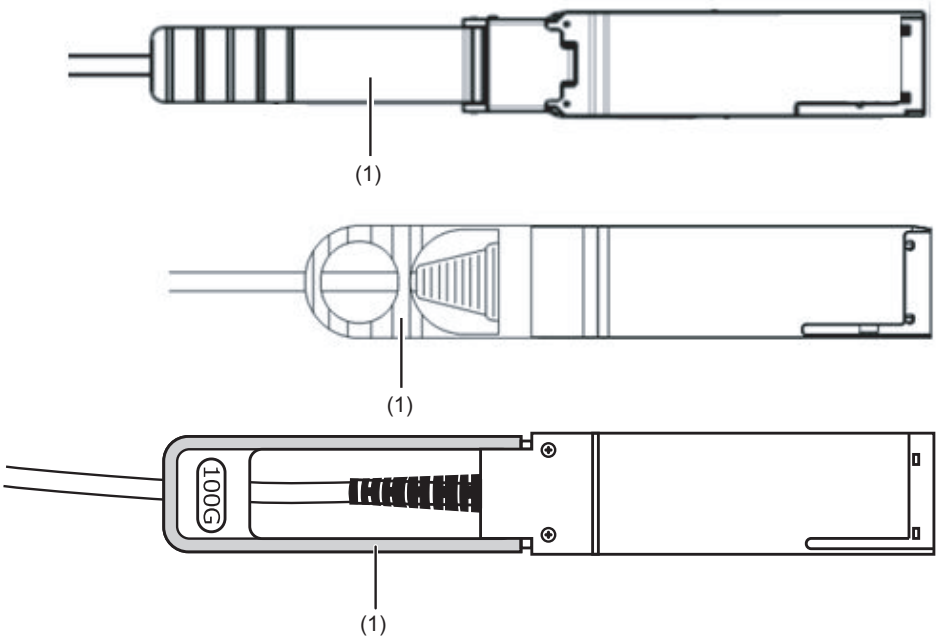

Number in Figure	Description
1	Tab

Insert the crossbar cable (optical) by holding the connector part of the cable and inserting it straight into the opening. Do not hold the cable by the cable or tab part when inserting it.

Caution - If you insert a connector with the tab pulled, the connector may be damaged.

Note - Confirm that the crossbar cables (optical) are correctly connected and secure.

Note - After installing the crossbar cables (optical), use a hook-and-loop fastener to bundle the cables together and secure them to the rear cable support.

3. **Confirm that the crossbar cables are correctly and firmly connected.**
With the crossbar cables connected to their ports, push in each cable while holding the joint (A in Figure 11-11) at the base of the crossbar cable connector.

Caution - A loose crossbar cable connection may, on rare occasions, cause an error due to poor connection. After connecting a crossbar cable, push it in again so that it is tightly in place to prevent any improper connection. Do not hold only the fiber optic cable when performing the work at this time. Otherwise, the fiber optic cable may bend out of shape.

Figure 11-11 Part to Hold When Checking a Crossbar Cable Connection

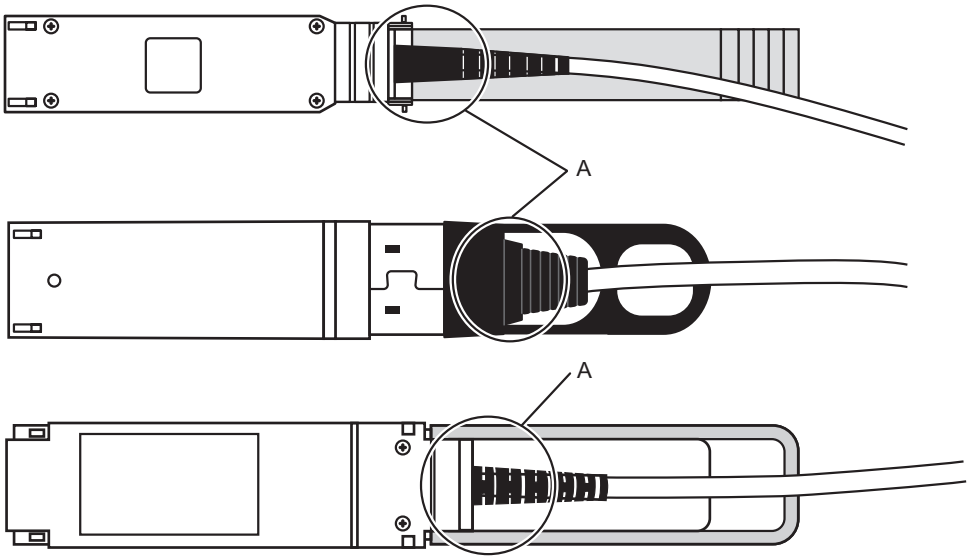

The FRU installation work is completed. See "Chapter 7 Maintenance Flow" to continue maintenance work.

Chapter 12

Maintaining the Crossbar Units

This chapter describes the procedure for maintaining the crossbar units mounted on the crossbar box.

12.1 Before Maintaining a Crossbar Unit

This chapter only has descriptions of the crossbar unit configuration and the work of removing and installing crossbar units.
Before removing a FRU, see "Chapter 7 Maintenance Flow" and perform the necessary work items.
For the types of maintenance on crossbar units, also see "Crossbar unit" in "Table 7-2 Types of Maintenance That Can be Applied to Each Crossbar Box FRU."

12.2 Configuration of the Crossbar Units

This section describes the configuration and the locations of the crossbar units.

Figure 12-1 Locations of Crossbar Units

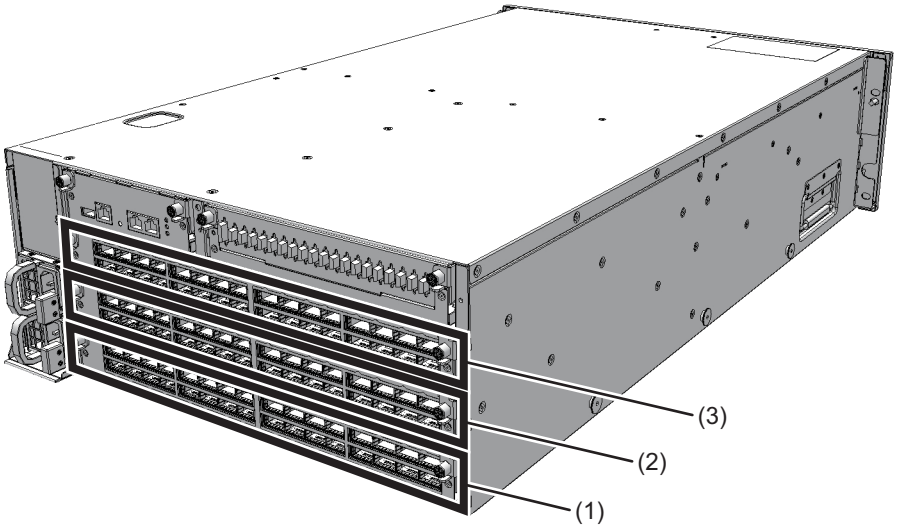

Location Number	Component
1	Crossbar unit (XBU#0)
2	Crossbar unit (XBU#1)
3	Crossbar unit (XBU#2)

12.3 Removing a Crossbar Unit

This section describes the procedure for removing a crossbar unit.
Enable the removal of the crossbar box before attempting to remove it. For details, see "Chapter 7 Maintenance Flow."

Caution - Before you handle any components, wear a wrist strap to ground any static electricity. If you perform this procedure without a wrist strap, individual components or the overall system may be damaged. For details, see "1.4 Notes Regarding Static Electricity."

1. **Remove all crossbar cables (optical) connected to the crossbar unit requiring maintenance.**
   For details, see "11.3 Removing a Crossbar Cable (Optical)."

Note - Make a note of the positions of the crossbar cables (optical) before disconnecting them to ensure that they are reinstalled correctly.

2. **Loosen the two screws (A in Figure 12-2) on the right and left sides and lower the levers to release the crossbar unit.**

Figure 12-2 Positions of Screws and Levers

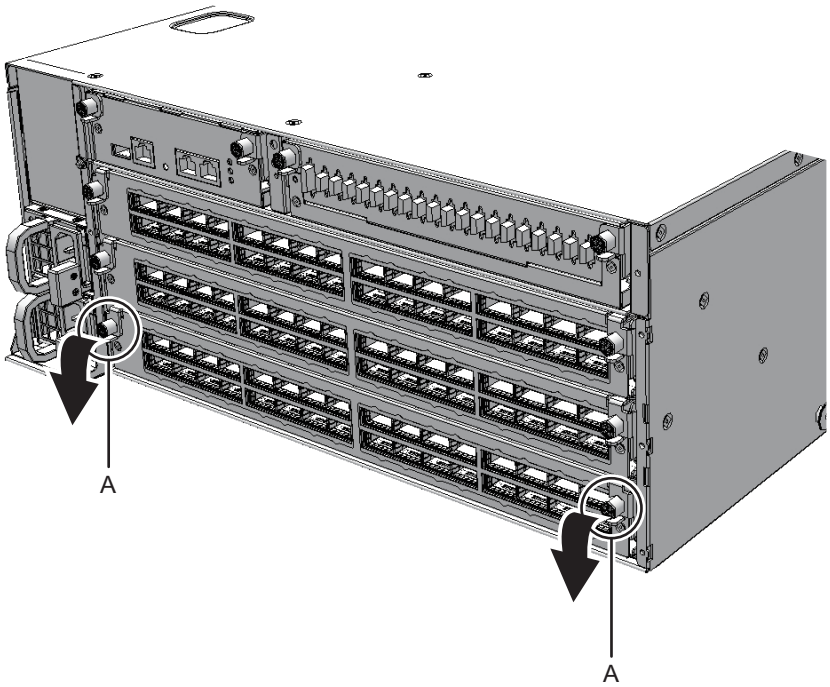

3. **Hold the levers and partially pull out the crossbar unit.**

Figure 12-3 Pulling Out the Crossbar Unit

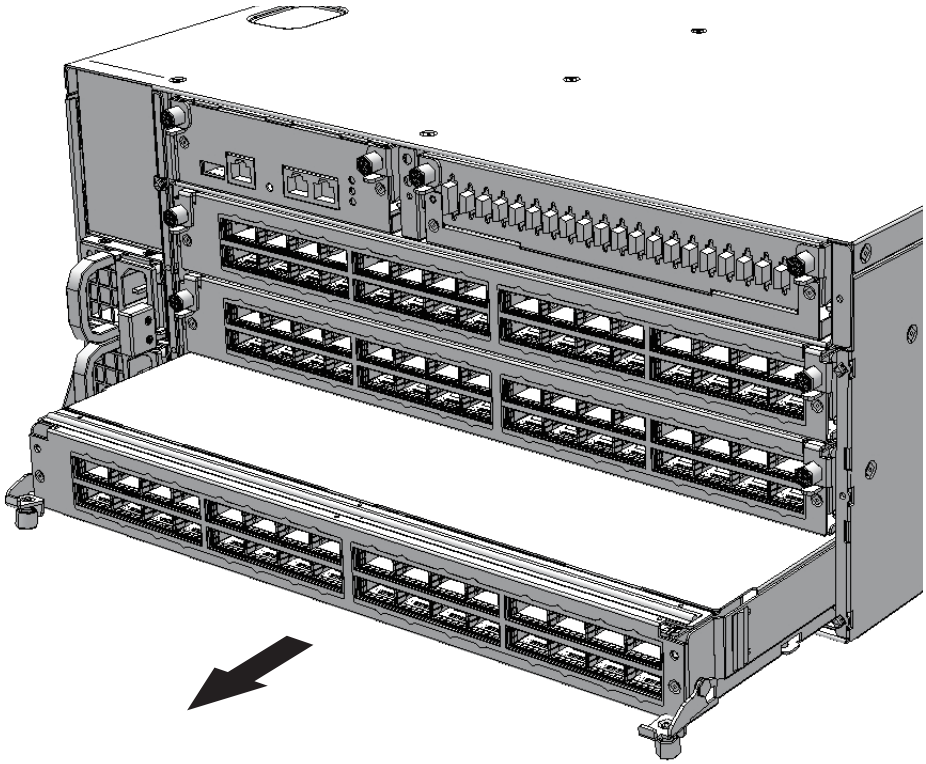

4. **Support the crossbar unit from below with one hand, and remove it carefully.**

Note - Place the removed crossbar unit on a grounded antistatic ESD mat.

12.4 Installing a Crossbar Unit

This section describes the procedure for installing a crossbar unit.

Caution - When mounting a crossbar unit, check the connectors on both the chassis and the crossbar unit beforehand to confirm that no pin is bent and all the pins are neatly arranged in lines. If a crossbar unit is mounted with a bent pin in a connector, the chassis or crossbar unit may be damaged. Also, carefully proceed with the work to prevent any pin from being bent.

---

1. **Carefully insert the crossbar unit into the chassis.**
2. **Close the right and left levers of the crossbar unit and tighten two screws.**

3. **Connect all crossbar cables (optical) to the crossbar unit.**
   For details, see "11.4 Installing a Crossbar Cable (Optical)."

Note - Reinstall the crossbar cables (optical) in their original positions by referring to the notes that you made prior to the start of maintenance.

Caution - A loose crossbar cable connection may, on rare occasions, cause an error due to poor connection. After connecting a crossbar cable, push it in again so that it is tightly in place to prevent any improper connection. Do not hold only the orange fiber optic cable when performing work at this time. Otherwise, the fiber optic cable may bend out of shape. For details, see step 3 in "11.4 Installing a Crossbar Cable (Optical)."

The FRU installation work is completed. See "Chapter 7 Maintenance Flow" to continue maintenance work.

Chapter 13

Maintaining the Power Supply Units

This chapter describes the procedure for maintaining the power supply units mounted in a crossbar box.

13.1 Before Maintaining a Power Supply Unit

This chapter only has descriptions of the power supply unit configuration and the work of removing and installing power supply units.
Before removing a FRU, see "Chapter 7 Maintenance Flow" and perform the necessary work items.
For the types of maintenance on power supply units, also see "Power supply unit" in "Table 7-2 Types of Maintenance That Can be Applied to Each Crossbar Box FRU."

13.2 Configuration of the Power Supply Units

This section describes the configuration and the locations of the power supply units. The power supply units can have the 1+1 redundant configuration. Active/Hot maintenance can be performed.

Figure 13-1 Locations of Power Supply Units

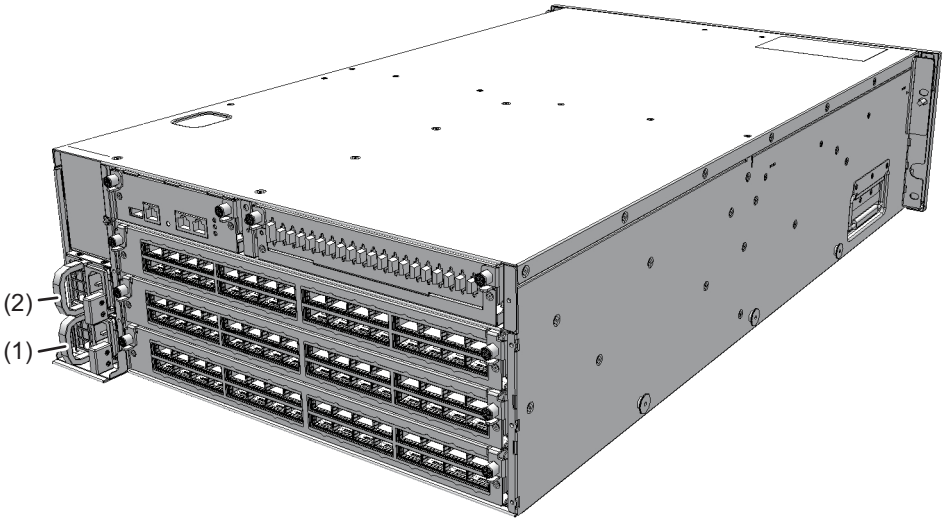

Location Number	Component
1	Power supply unit (PSU#0)
2	Power supply unit (PSU#1)

13.3 Removing a Power Supply Unit

This section describes the procedure for removing a power supply unit.
Enable the removal of the power supply unit before attempting to remove it. For details, see "Chapter 7 Maintenance Flow."

Caution - Before you handle any components, wear a wrist strap to ground any static electricity. If you perform this procedure without a wrist strap, individual components or the overall system may be damaged. For details, see "1.4 Notes Regarding Static Electricity."

1. **While pushing the lever (A in Figure 13-2) of the power supply unit, hold the handle (B in Figure 13-2) and pull out the power supply unit.**

Figure 13-2 Removing a Power Supply Unit

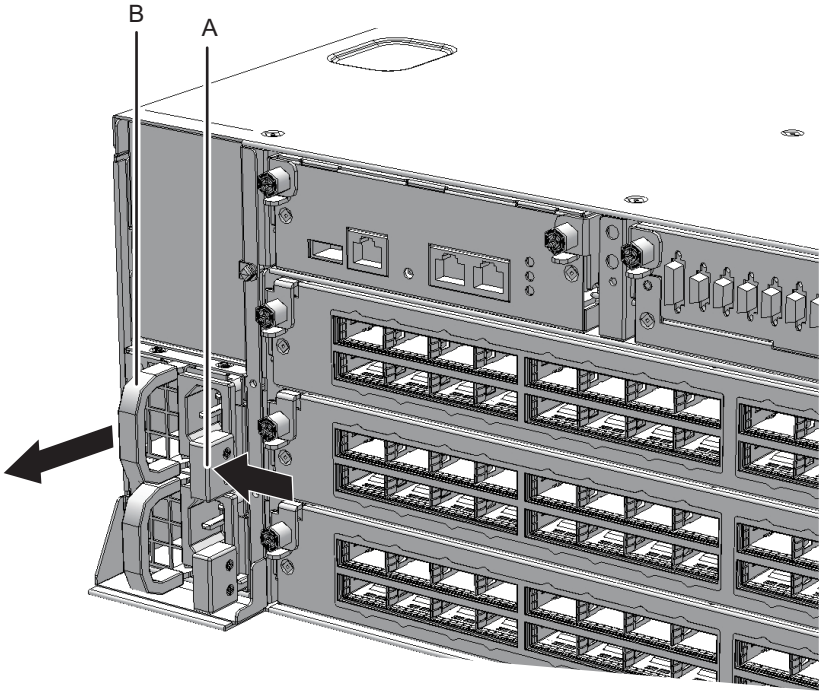

2. **Support the power supply unit from below with one hand, and carefully pull it out of the slot.**

Note - Place the removed power supply unit on the grounded ESD mat to ground any static electricity.

13.4 Installing a Power Supply Unit

This section describes the procedure for installing a power supply unit.

1. **Support the power supply unit from below with one hand, and insert it carefully into its slot.**

Caution - Do not forcibly push the power supply unit into its slot. Using excessive force may damage the component or the chassis.

---

2. **Push the power supply unit fully home.**

Note - Check that the power supply unit is fully inserted and that the lever is fixed.

The FRU installation work is completed. See "Chapter 7 Maintenance Flow" to continue maintenance work.

Chapter 14

Maintaining the XSCF Interface Unit

This chapter describes the procedure for maintaining the XSCF interface unit mounted in a crossbar box.

14.1 Before Maintaining an XSCF Interface Unit

This chapter only has descriptions of the XSCF interface unit location and the work of removing and installing the unit.
Before removing a FRU, see "Chapter 7 Maintenance Flow" and perform the necessary work items.
For the types of maintenance on the XSCF interface unit, also see "XSCF interface unit" in "Table 7-2 Types of Maintenance That Can be Applied to Each Crossbar Box FRU."

14.2 Location of the XSCF Interface Unit

This section describes the location of the XSCF interface unit.

Figure 14-1 Location of the XSCF Interface Unit

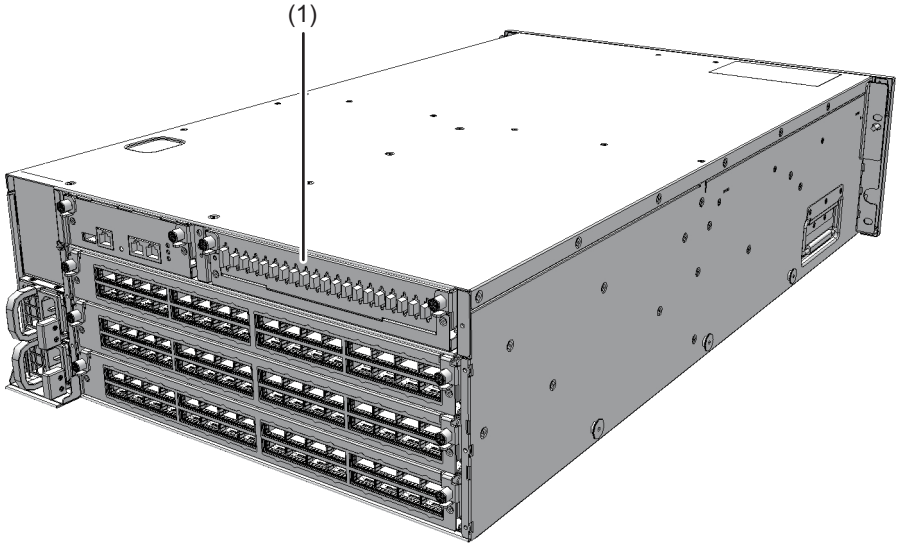

Location Number	Component
1	XSCF interface unit (XSCFIFU)

14.3 Maintenance Precautions

Note the following points during maintenance on the XSCF interface unit.

- Do not replace the XSCF unit and the XSCF interface unit at the same time during system-stopped/cold maintenance. If you replace both the XSCF unit and the XSCF interface unit at the same time, the system will fail to operate normally. Replace the XSCF unit in the hot state and then replace the XSCF interface unit in the cold state.
- Do not mount and use any of the following XSCF interface units in another chassis:
  - the one currently mounted in the crossbar box, or
  - one that was once used as a maintenance part
  This is because these XSCF interface units store device identification information.

14.4 Removing the XSCF Interface Unit

This section describes the procedure for removing an XSCF interface unit.
Enable the removal of the XSCF interface unit before attempting to remove it. For details, see "Chapter 7 Maintenance Flow."

Caution - Before you handle any components, wear a wrist strap to ground any static electricity. If you perform this procedure without a wrist strap, individual components or the overall system may be damaged. For details, see "1.4 Notes Regarding Static Electricity."

---

1. **Remove all the XSCF BB control cables and XSCF DUAL control cables connected to the XSCF interface unit.**

Note - Record the positions of the cables before removing them to ensure that they are reinstalled correctly.

---

2. **Loosen the two screws (A in Figure 14-2) of the XSCF interface unit and lower the right and left levers to release the XSCF interface unit.**

Figure 14-2 Positions of Screws and Levers

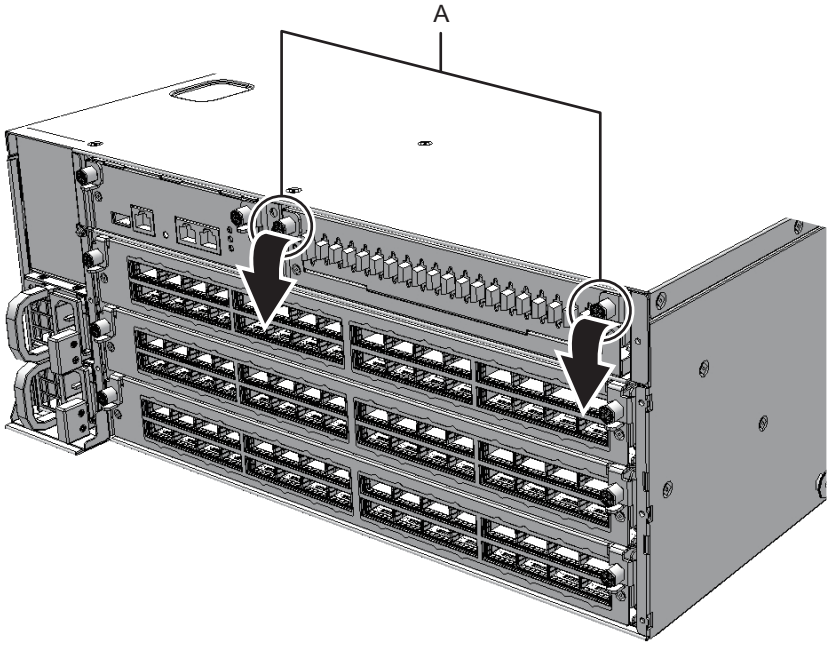

3. **Hold the levers and partially pull out the XSCF interface unit.**

Figure 14-3 Pulling Out the XSCF Interface Unit

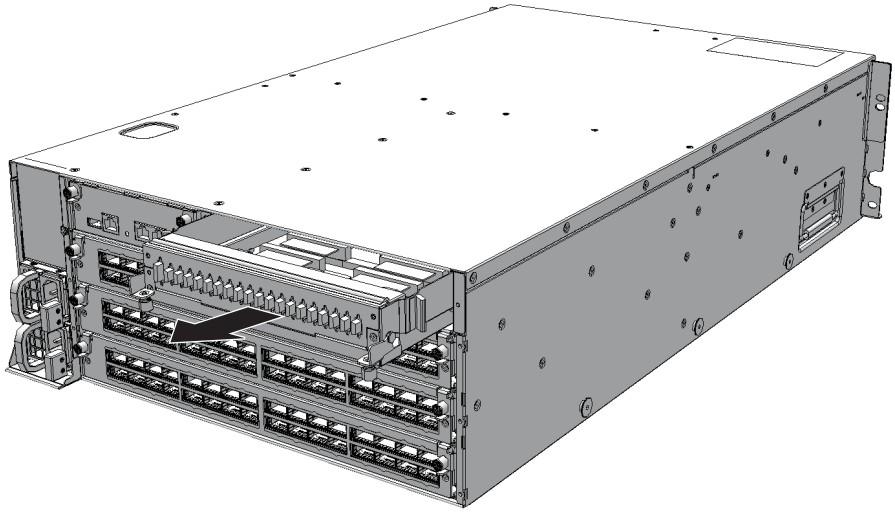

4. **Support the XSCF interface unit from below with one hand, and carefully remove it from the chassis.**

Note - Place the removed XSCF interface unit on a grounded antistatic ESD mat.

14.5 Installing the XSCF Interface Unit

This section describes the procedure for installing the XSCF interface unit.

Caution - When mounting an XSCF interface unit, check the connectors on both the chassis and the XSCF interface unit beforehand to confirm that no pin is bent and all the pins are neatly arranged in lines. If an XSCF interface unit is mounted with a bent pin in a connector, the chassis or XSCF interface unit may be damaged. Also, carefully proceed with the work to prevent any pin from being bent.

---

1. **Support the XSCF interface unit from below with one hand, and carefully insert it into the chassis.**
2. **Raise the right and left levers and tighten the two screws.**
3. **Connect all the cables to the XSCF interface unit.**

Note - Reinstall the cables in their original positions by referring to the notes that you made

before the start of maintenance.

Note - Ensure that the cables are firmly connected and secured.

The FRU installation work is completed. See "Chapter 7 Maintenance Flow" to continue maintenance work.

Chapter 15

Maintaining the Fan Units

This chapter describes the procedure for maintaining the fan units mounted in a crossbar box.

15.1 Before Maintaining a Fan Unit

This chapter only has descriptions of the fan unit configuration and the work of removing and installing fan units.
Before removing a FRU, see "Chapter 7 Maintenance Flow" and perform the necessary work items.
For the types of maintenance on fan units, also see "Fan unit" in "Table 7-2 Types of Maintenance That Can be Applied to Each Crossbar Box FRU."

15.2 Configuration of the Fan Units

This section describes the configuration and the locations of the fan units.
Four fan units are mounted in each chassis.
If one of the cooling fans fails during system operation, the XSCF detects the error. However, the system can continue operating because the fans have a redundant configuration.

Figure 15-1 Locations of Fan Units

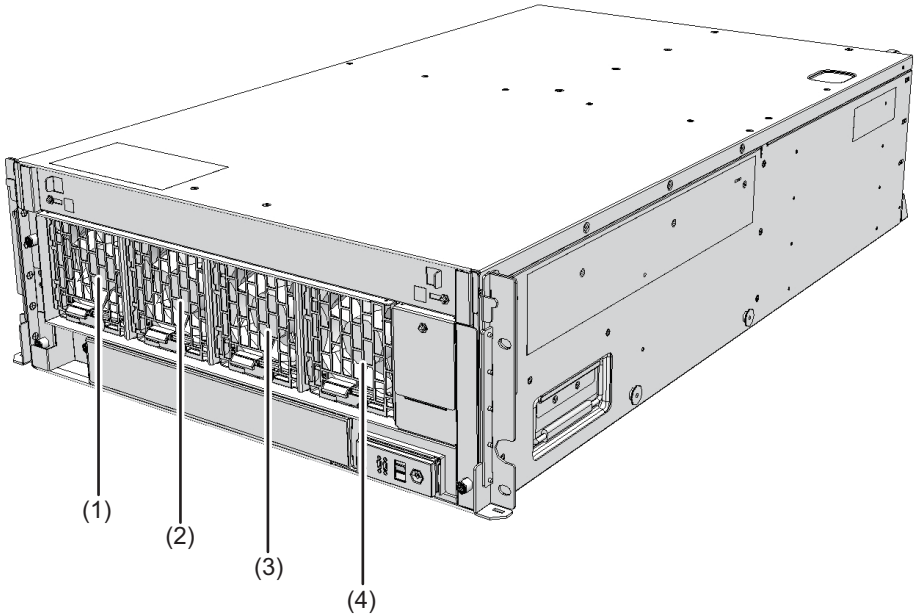

Location Number	Component
1	Fan unit (FANU#0)
2	Fan unit (FANU#1)
3	Fan unit (FANU#2)
4	Fan unit (FANU#3)

15.3 Removing a Fan Unit

This section describes the procedure for removing a fan unit.
Enable the removal of the fan unit before attempting to remove it. For details, see "Chapter 7 Maintenance Flow."

Caution - Before you handle any components, wear a wrist strap to ground any static electricity. If you perform this procedure without a wrist strap, individual components or the overall system may be damaged. For details, see "1.4 Notes Regarding Static Electricity."

15.3.1 Accessing a Fan Unit

1. **Remove the front cover.**
   For details, see "5.5.2 Removing the Front Cover."

15.3.2 Removing a Fan Unit

1. **Pull out the fan unit while raising the lever (A in Figure 15-2) of the fan unit.**

Figure 15-2 Lever of the Fan Unit

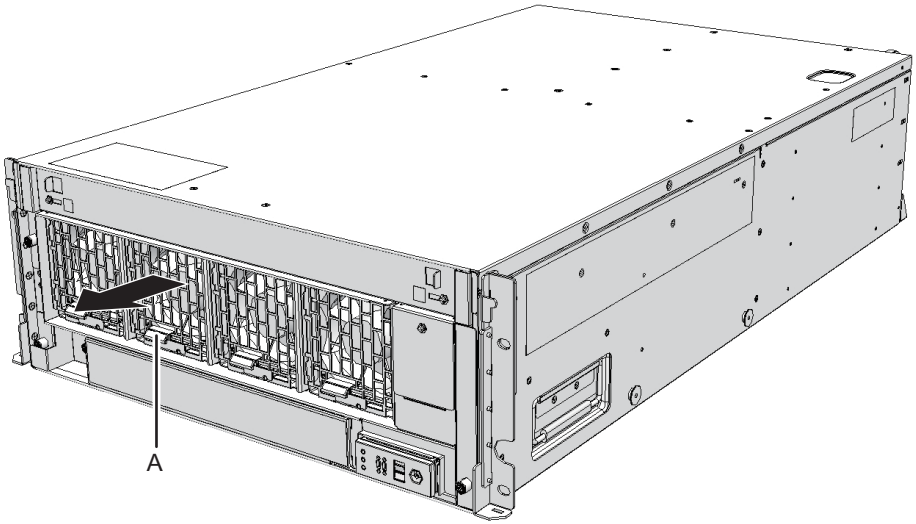

2. **Carefully remove the fan unit from its slot.**

Note - Place the removed fan unit on a grounded antistatic ESD mat.

15.4 Installing a Fan Unit

This section describes the procedure for installing a fan unit.

15.4.1 Installing a Fan Unit

1. **Carefully insert the fan unit into its slot.**

Caution - Do not force the fan unit into the slot. Using excessive force may damage the component or the chassis.

---

2. **Push the fan unit fully home.**

Note - Check that the fan unit is fully inserted and secured.

15.4.2 Restoring the Chassis

1. **Install the front cover.**
   For details, see "6.1.2 Installing the Front Cover."

The FRU installation work is completed. See "Chapter 7 Maintenance Flow" to continue maintenance work.

Chapter 16

Maintaining the Fan Backplane

This chapter describes the procedure for maintaining the fan backplane mounted in the crossbar box.

16.1 Before Maintaining a Fan Backplane

This chapter only has descriptions of the fan backplane configuration and the work of removing and installing the fan backplane.
Before removing a FRU, see "Chapter 7 Maintenance Flow" and perform the necessary work items.
For the types of maintenance on the fan backplane, also see "Fan backplane" in "Table 7-2 Types of Maintenance That Can be Applied to Each Crossbar Box FRU."

16.2 Configuration of the Fan Backplane

This section describes the configuration and the location of the fan backplane. The fan units are interconnected through the fan backplane.

Figure 16-1 Location of the Fan Backplane

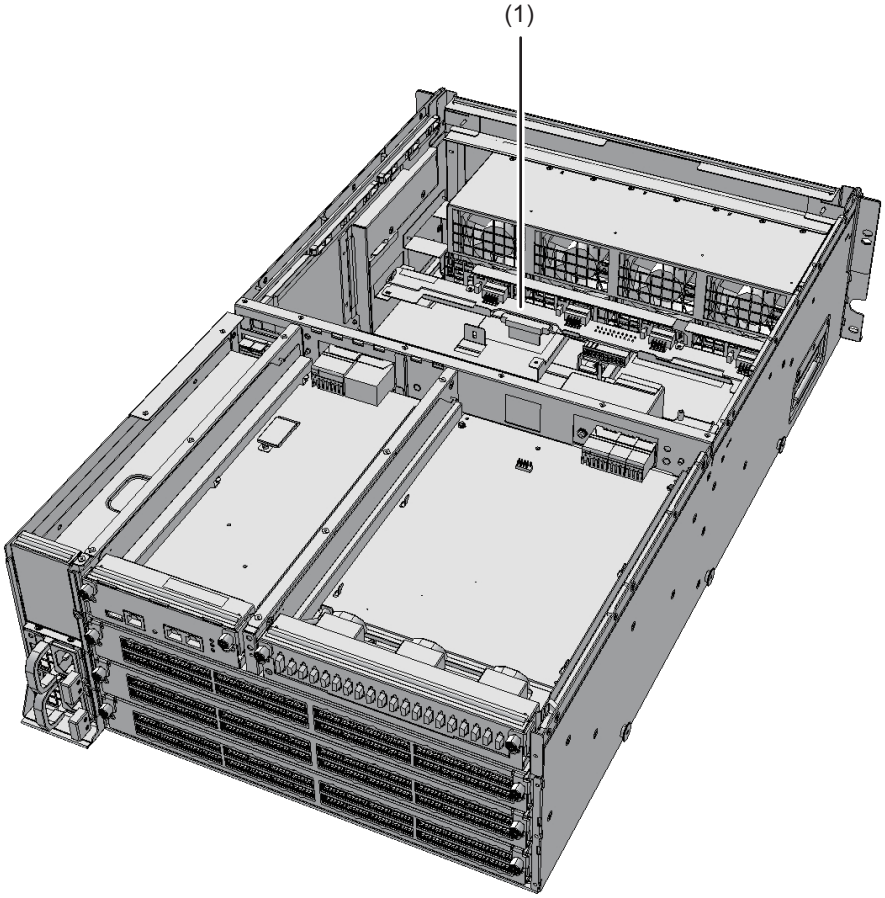

Location Number	Component
1	Fan backplane (FANBP)

16.3 Removing the Fan Backplane

This section describes the procedure for removing the fan backplane.
Enable the removal of the fan backplane before attempting to remove it. For details, see "Chapter 7 Maintenance Flow."

Caution - Before you handle any components, wear a wrist strap to ground any static electricity. If you perform this procedure without a wrist strap, individual components or the overall system may be damaged. For details, see "1.4 Notes Regarding Static Electricity."

16.3.1 Accessing the Fan Backplane

1. **Remove the front cover.**
   For details, see "5.5.2 Removing the Front Cover."
2. **Remove all the fan units.**
   For details, see "15.3 Removing a Fan Unit."

16.3.2 Removing the Fan Backplane

1. **Loosen the two screws (A in Figure 16-2) securing the upper cover, and slide the right and left stoppers (B in Figure 16-2) inward. Then, remove the upper cover (C in Figure 16-2).**

Figure 16-2 Removing the Upper Cover

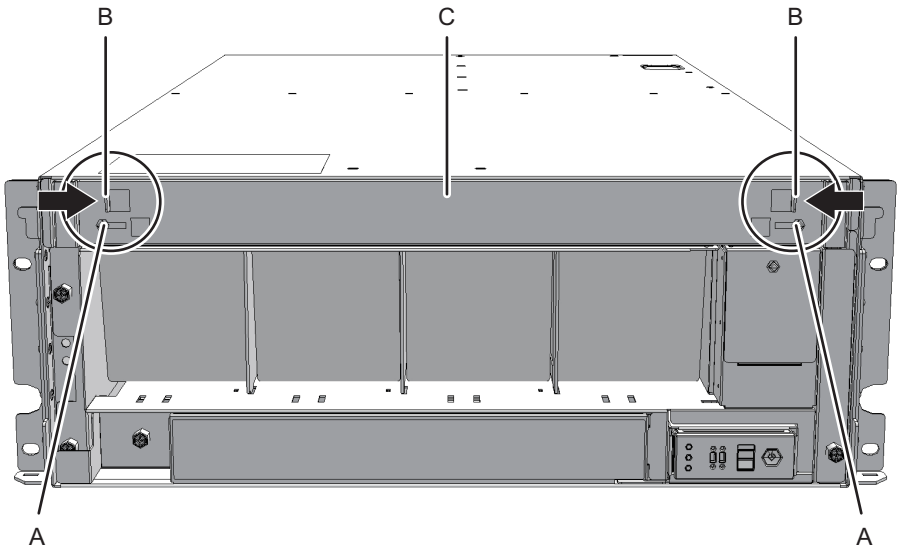

2. **Loosen the one screw (A in Figure 16-3) securing the lower cover, and slide the lower cover to the left to remove it.**

Figure 16-3 Removing the Lower Cover

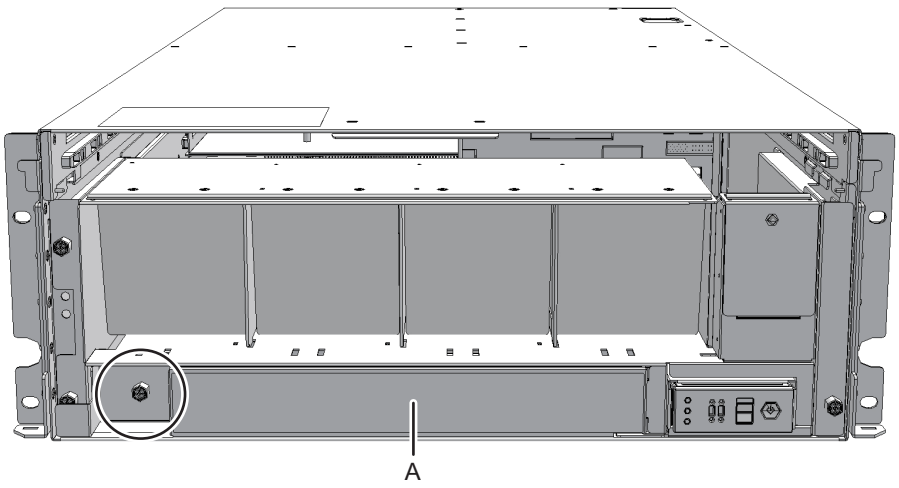

3. **Disconnect the two cables from the fan shelf.**
   Keep the disconnected cables together in the center of the shelf.

Figure 16-4 Removing the Cables

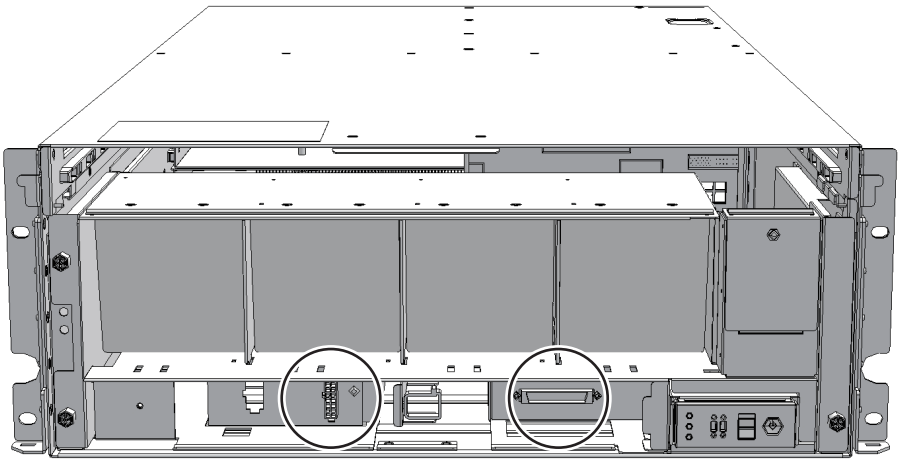

4. **Loosen the three screws securing the fan shelf and partially pull out the fan shelf.**

Figure 16-5 Removing the Fan Shelf

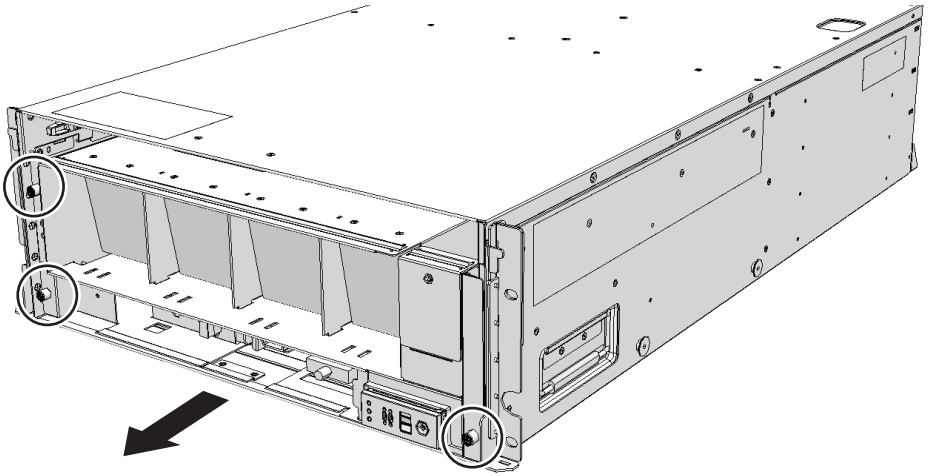

5. **Place a hand under the fan shelf to support it, and carefully remove it from the chassis.**

Note - Remove the fan shelf while paying careful attention to the two cables arranged in the center.

Note - Place the removed fan shelf on a grounded antistatic ESD mat.

---

6. **Disconnect the two cables from the fan backplane.**

Figure 16-6 Removing the Cables

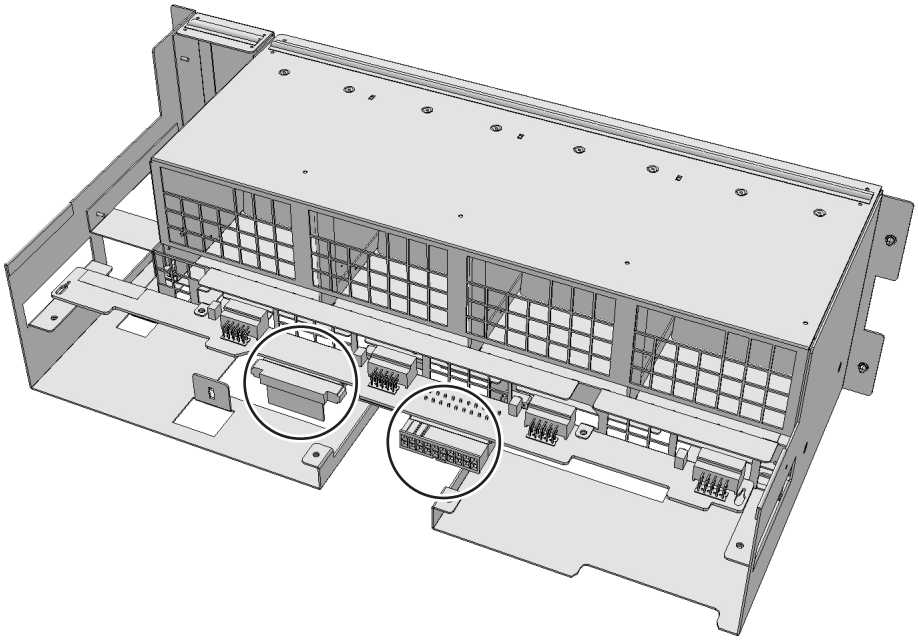

7. **Remove the two screws securing the fan backplane to remove the bracket (A in Figure 16-7).**

Figure 16-7 Removing the Screws and Bracket

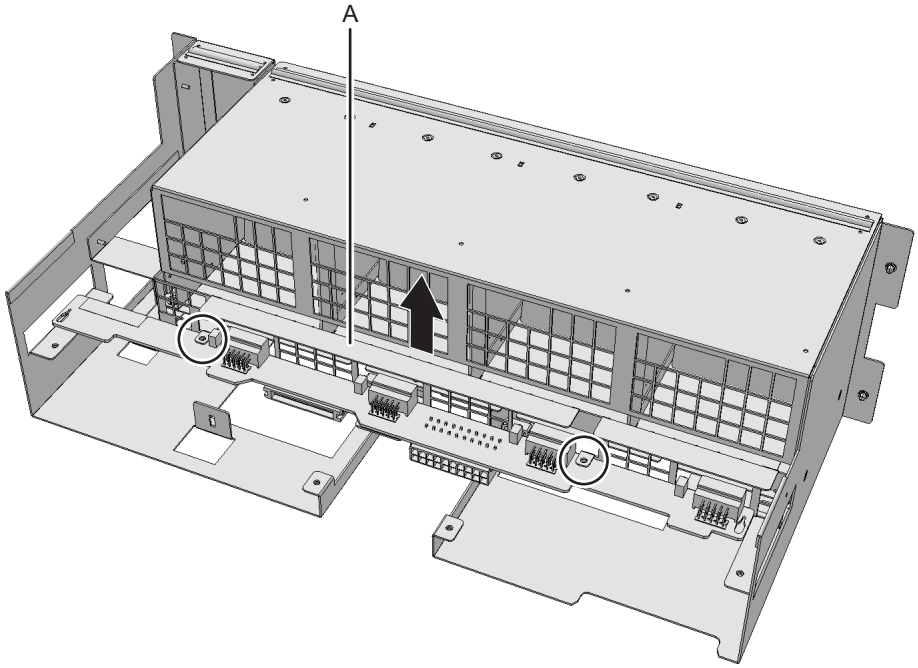

8. **Remove the fan backplane.**

Note - Place the removed fan backplane on a grounded antistatic ESD mat.

16.4 Installing the Fan Backplane

This section describes the procedure for installing the fan backplane.

16.4.1 Installing the Fan Backplane

1. **Fit the fan backplane into the right- and left-hand notches in the fan shelf.**
2. **Install the bracket of the fan backplane and secure it with two screws.**
3. **Connect the two cables to the fan backplane.**
4. **Support the fan shelf from below with one hand, and carefully insert it into the chassis.**
   Arranging the cables in the center makes it easier to install the fan shelf.
5. **Tighten the three screws securing the fan shelf.**

6. **Connect the two cables to the fan shelf.**
7. **Install the lower cover, and secure it with one screw.**
8. **Install the upper cover.**
9. **Slide the right and left stoppers of the upper cover outward, and secure the cover with two screws.**

16.4.2 Restoring the Chassis

1. **Install all the fan units.**
   For details, see "15.4.1 Installing a Fan Unit."
2. **Install the front cover.**
   For details, see "6.1.2 Installing the Front Cover."

The FRU installation work is completed. See "Chapter 7 Maintenance Flow" to continue maintenance work.

Chapter 17

Maintaining the Operation Panel

This chapter describes the procedure for maintaining the operation panel mounted on the crossbar box.

17.1 Before Maintaining the Operation Panel

This chapter only has descriptions of the operation panel location and the work of removing and installing the operation panel.
Before removing a FRU, see "Chapter 7 Maintenance Flow" and perform the necessary work items.
For the types of maintenance on the operation panel, also see "Operation panel" in "Table 7-2 Types of Maintenance That Can be Applied to Each Crossbar Box FRU."

17.2 Location of the Operation Panel

This section describes the location of the operation panel.

Figure 17-1 Location of the Operation Panel

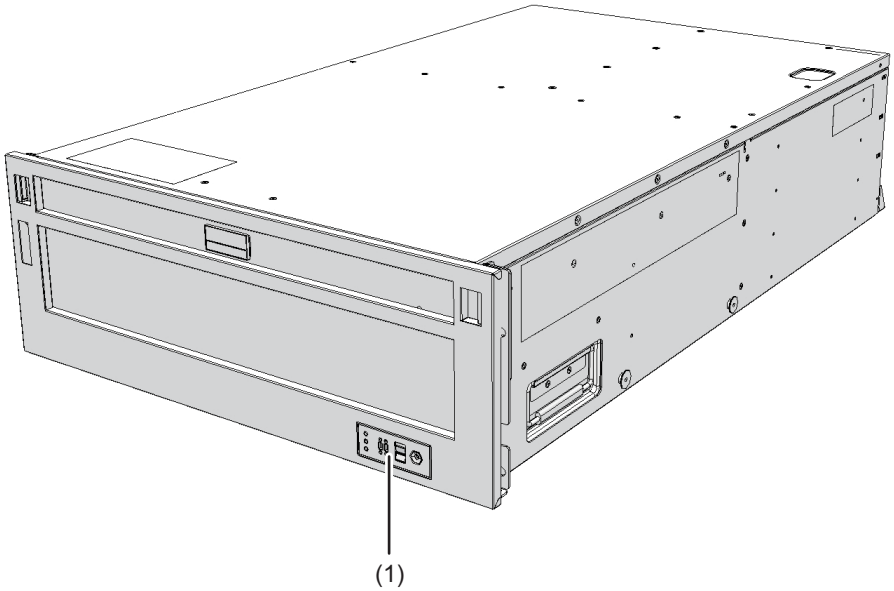

Location Number	Component
1	Operation panel (OPNL)

17.3 Maintenance Precautions

This section describes the precautions for operation panel maintenance.

- If you replace the operation panel, set the BB-ID for the new operation panel to the same value as that prior to the start of maintenance.

17.4 Removing the Operation Panel

This section describes the procedure for removing the operation panel.
Enable the removal of the operation panel before attempting to remove it. For details, see "Chapter 7 Maintenance Flow."

Caution - Before you handle any components, wear a wrist strap to ground any static electricity. If you perform this procedure without a wrist strap, individual components or the overall system may be damaged. For details, see "1.4 Notes Regarding Static Electricity."

17.4.1 Accessing the Operation Panel

1. **Check the BB-ID switch on the operation panel and record the BB-ID set for the crossbar box requiring maintenance.**
2. **Remove the front cover of the crossbar box.**
   For details, see "5.5.2 Removing the Front Cover."
3. **Remove all the fan units.**
   For details, see "15.3.2 Removing a Fan Unit."
4. **Loosen the two screws (A in Figure 17-2) securing the upper cover, and slide the right and left stoppers (B in Figure 17-2) inward. Then, remove the upper cover (C in Figure 17-2).**

Figure 17-2 Removing the Upper Cover

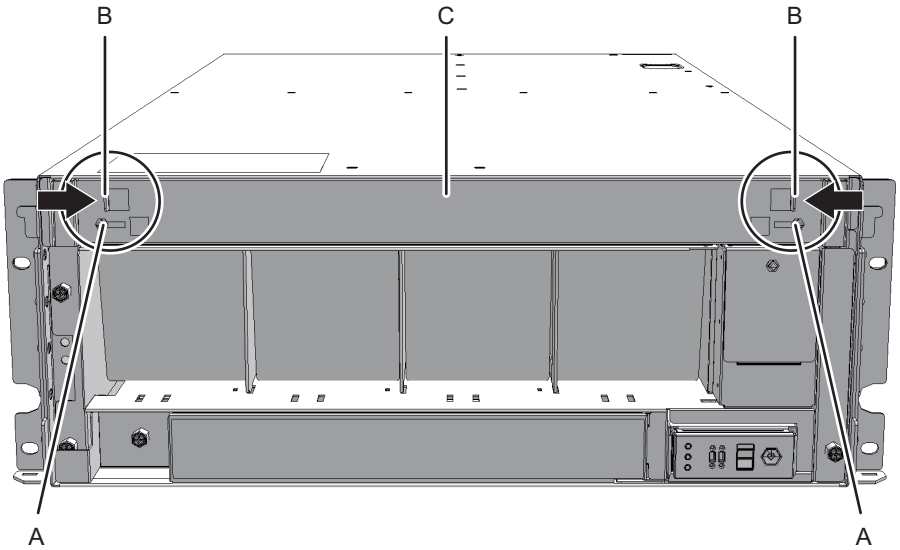

5. **Loosen the one screw (A in Figure 17-3) securing the lower cover, and slide the lower cover to the left to remove it.**

Figure 17-3 Removing the Lower Cover

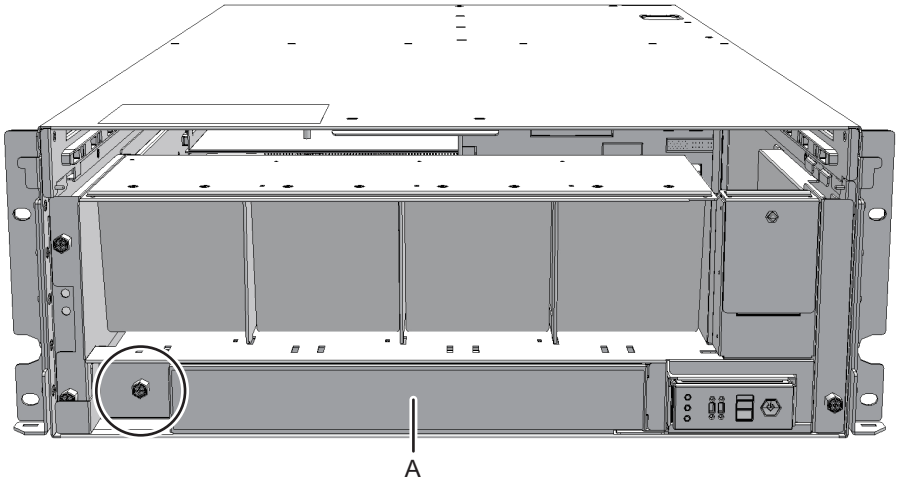

6. **Disconnect the two cables from the fan shelf.**
   Keep the disconnected cables together in the center of the shelf.

Figure 17-4 Removing the Cables

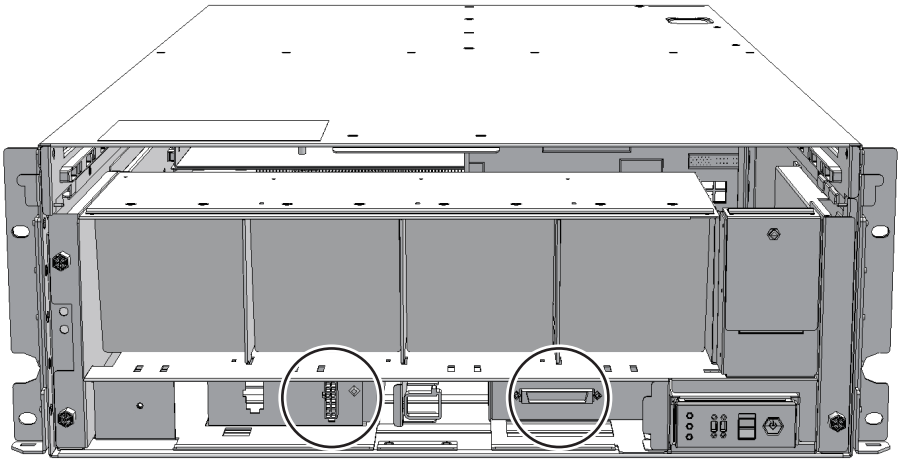

7. **Loosen the three screws securing the fan shelf and partially pull out the fan shelf.**

Figure 17-5 Removing the Fan Shelf

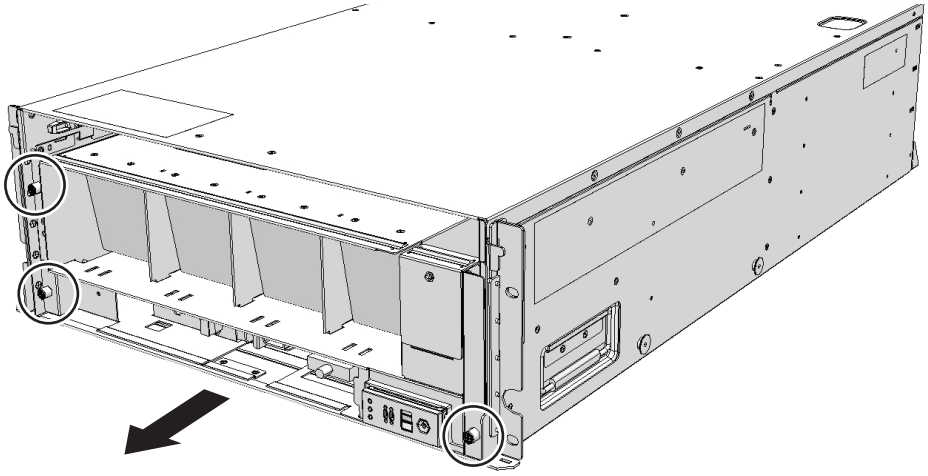

8. **Place a hand under the fan shelf to support it, and carefully remove it from the chassis.**

Note - Remove the fan shelf while paying careful attention to the two cables arranged in the center.

Note - Place the removed fan shelf on a grounded antistatic ESD mat.

17.4.2 Removing the Operation Panel

1. **Remove the cable connecting the fan shelf to the operation panel.**

Figure 17-6 Operation Panel Cable

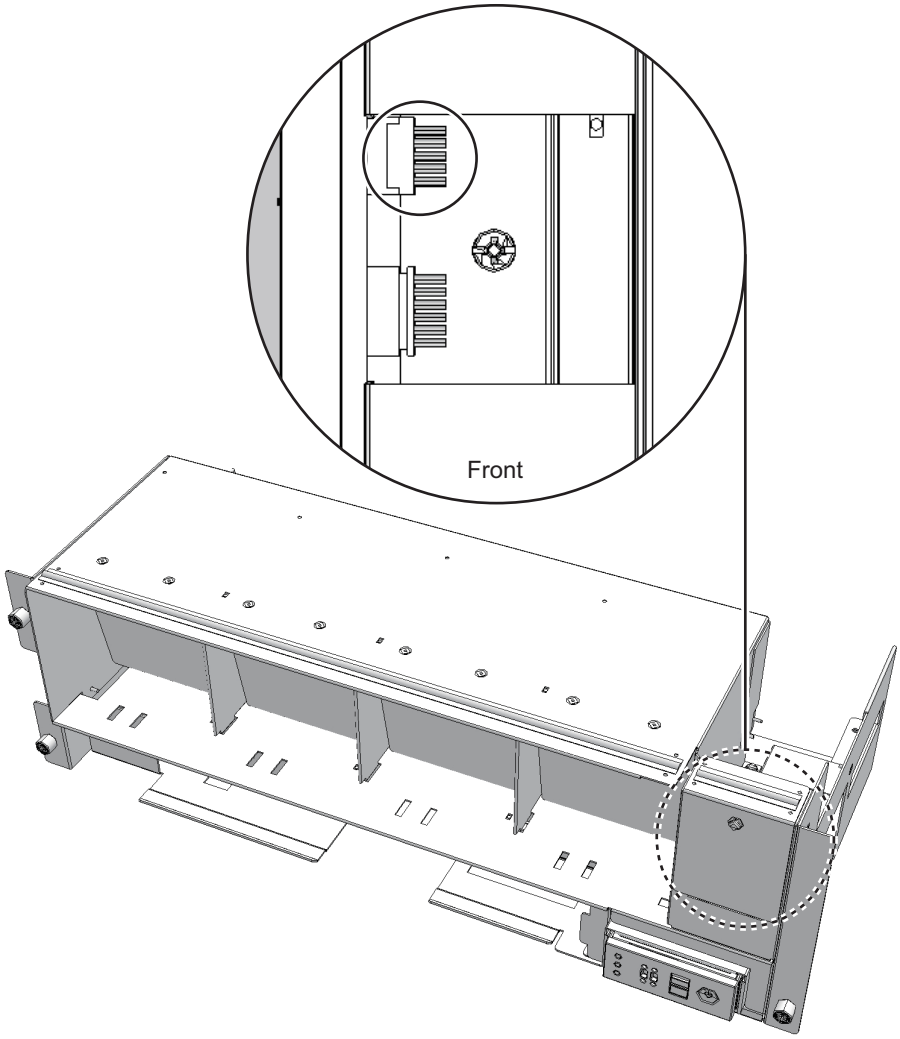

2. **Loosen the one screw securing the operation panel, and remove the panel.**

Figure 17-7 Removing the Operation Panel

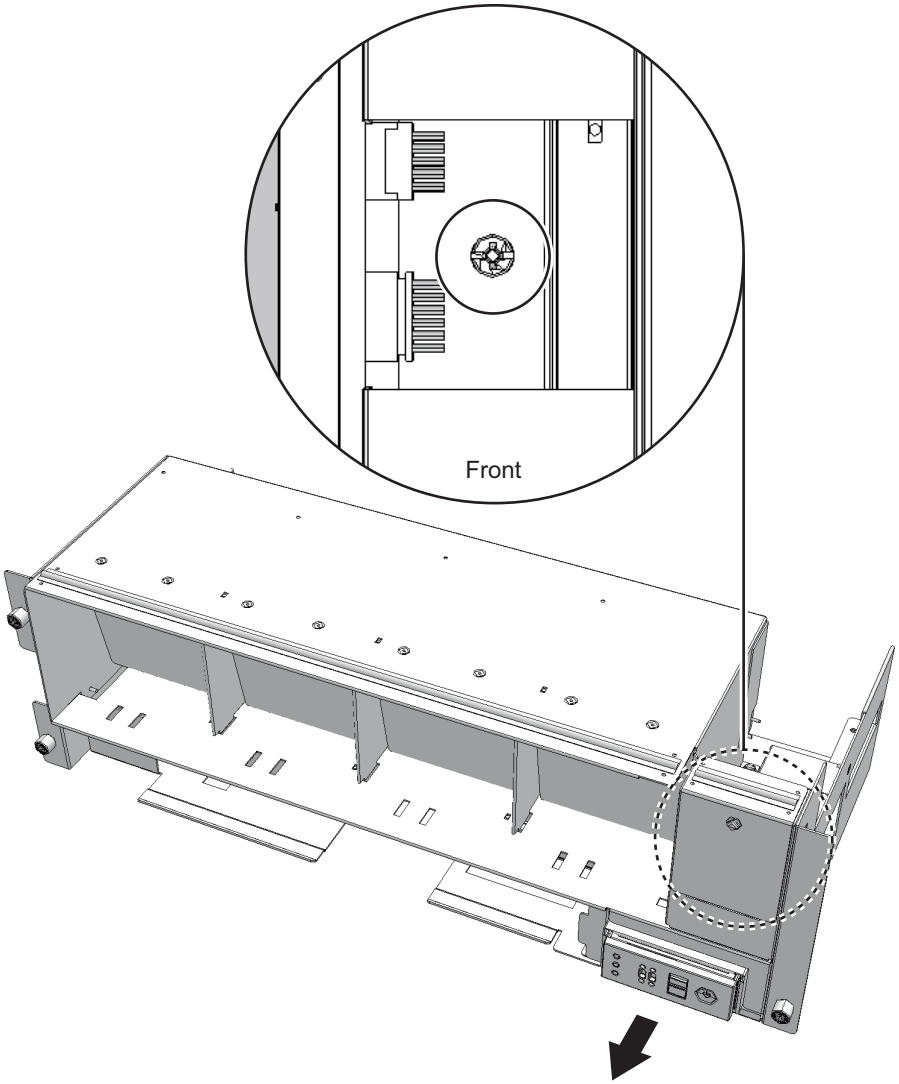

Note - Place the removed operation panel on a grounded antistatic ESD mat.

17.5 Installing the Operation Panel

This section describes the procedure for installing the operation panel.

17.5.1 Installing the Operation Panel

1. **Set the BB-ID of the operation panel to the value prior to the start of maintenance.**
2. **Insert the operation panel into the fan shelf, and secure it with one screw.**

Figure 17-8 Installing the Operation Panel

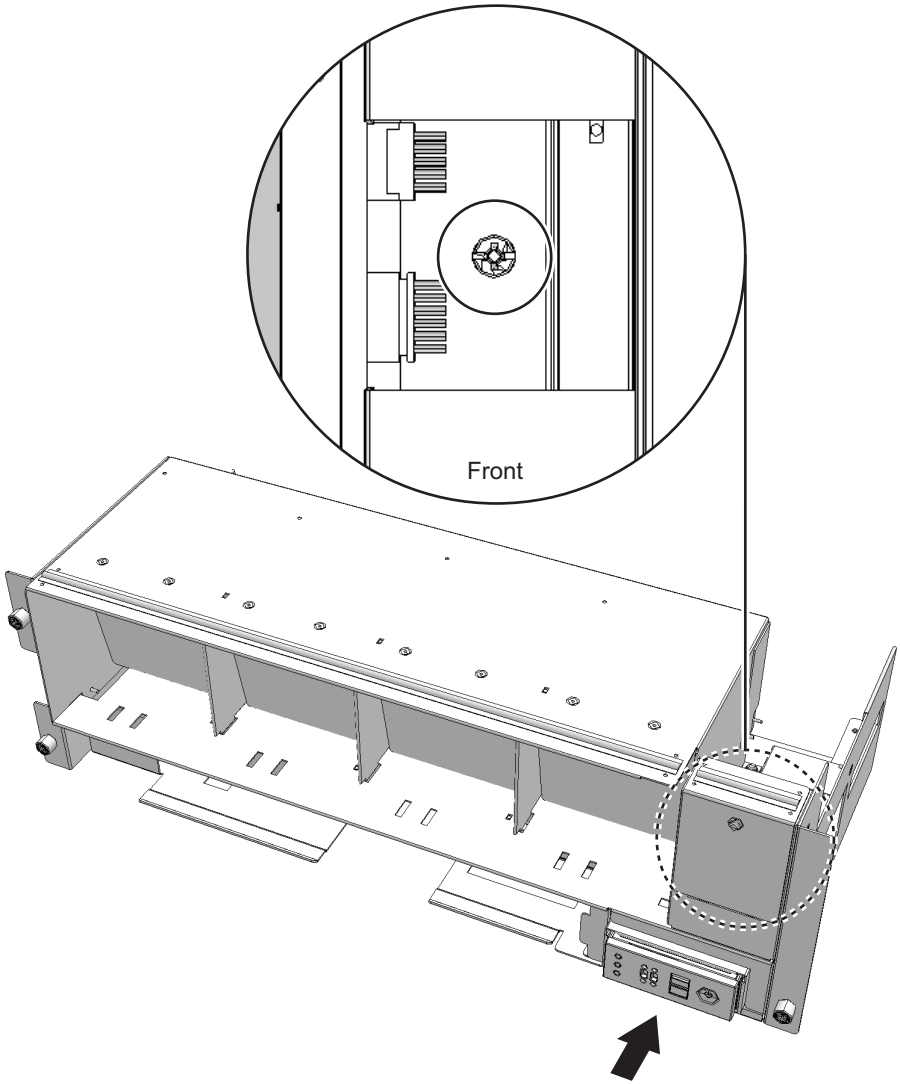

3. **Reinstall the cable between the fan shelf and the operation panel.**

Figure 17-9 Operation Panel Cable

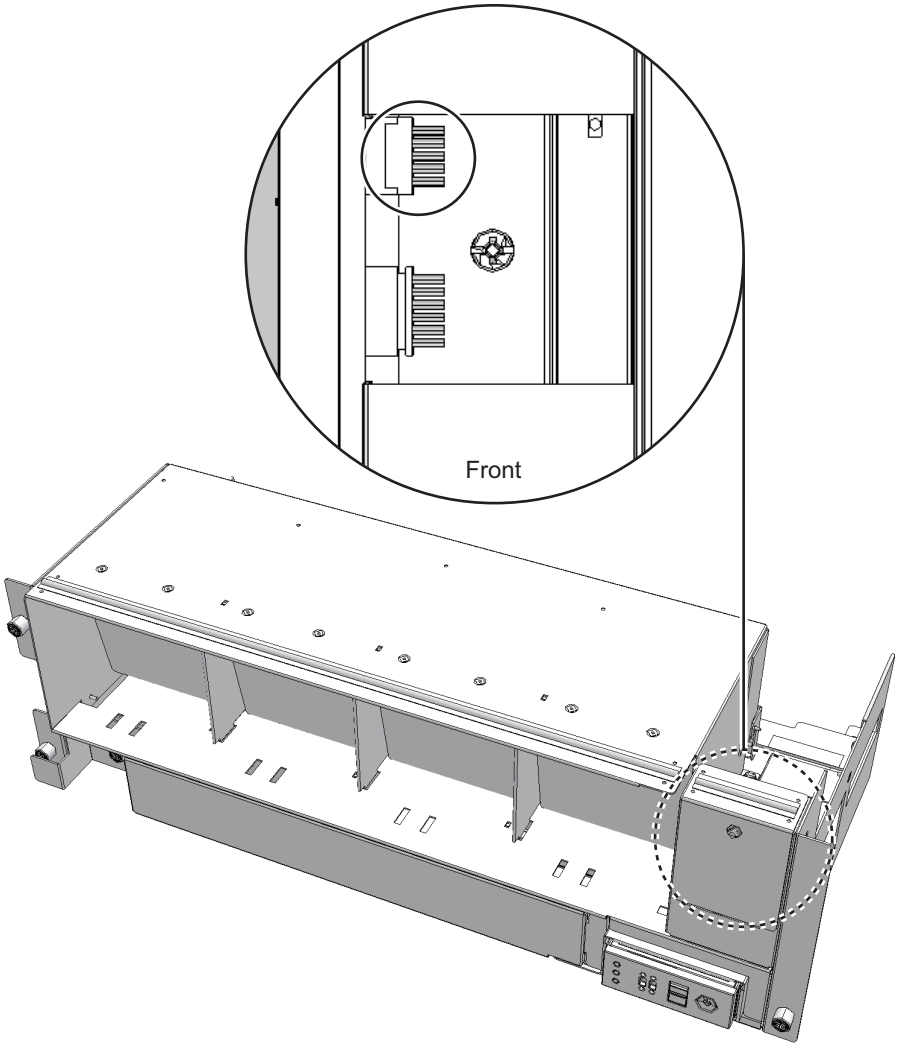

17.5.2 Restoring the Chassis

1. **Support the fan shelf from below with one hand, and insert it into the chassis. Then, tighten the three screws.**
2. **Connect the two cables to the fan shelf.**
3. **Install the lower cover, and secure it with one screw.**
4. **Install the upper cover and slide the right and left stoppers outward. Then, tighten the two screws to secure the upper cover.**
5. **Install all the fan units.**

For details, see "15.4.1 Installing a Fan Unit."

6. **Install the front cover of the crossbar box.**
   For details, see "6.1.2 Installing the Front Cover."

The FRU installation work is completed. See "Chapter 7 Maintenance Flow" to continue maintenance work.

Chapter 18

Maintaining the Cable Kit

This chapter describes the procedure for maintaining the cable kit mounted on the crossbar box.

18.1 Before Maintaining a Cable Kit

This chapter only has descriptions of the cable kit configuration and the work of removing and installing the cable kit.
Before removing a FRU, see "Chapter 7 Maintenance Flow" and perform the necessary work items.
For the types of maintenance on the cable kit, also see "Cable kit" in "Table 7-2 Types of Maintenance That Can be Applied to Each Crossbar Box FRU."

18.2 Configuration of the Cable Kit

This section describes the configuration and location of the cable kit.
The cable kit is a set of cables for connections between the crossbar backplane unit and terminal board and between the terminal board and fan backplane.
The cable kit contains the following cables.

18.2.1 Cables for the Connection Between the Crossbar Backplane Unit and Terminal Board

- Cable (SIG)
  Cable for the connection between the crossbar backplane unit and terminal board (SIG)

Figure 18-1 Cable (SIG) (Between the Crossbar Backplane Unit and Terminal Board)

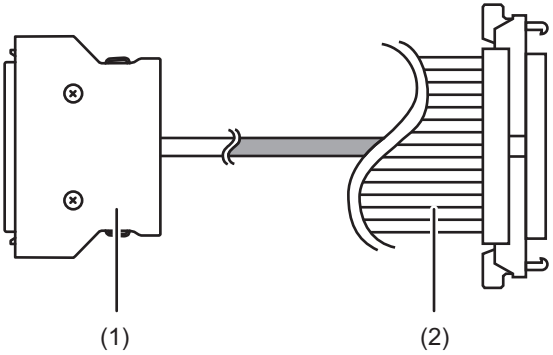

Location Number	Component
1	Connector (terminal board (SIG) side)
2	Connector (crossbar backplane unit side)

- Cable (PWR)
  Cable for the connection between the crossbar backplane unit and terminal board (PWR)

Figure 18-2 Cable (PWR) (Between the Crossbar Backplane Unit and Terminal Board)

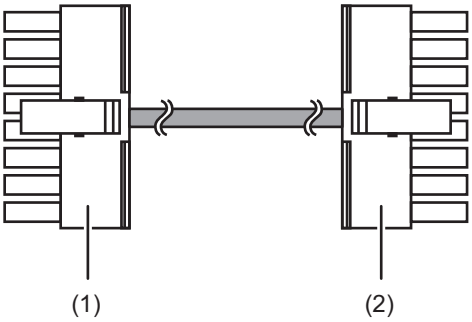

Location Number	Component
1	Connector (terminal board (PWR) side)
2	Connector (crossbar backplane unit side)

18.2.2 Cables for the Connection Between the Terminal Board and Fan Backplane

- Cable (PWR)
  Cable for the connection between the terminal board and fan backplane (PWR)

Figure 18-3 Cable (PWR) (Between the Terminal Board and Fan Backplane)

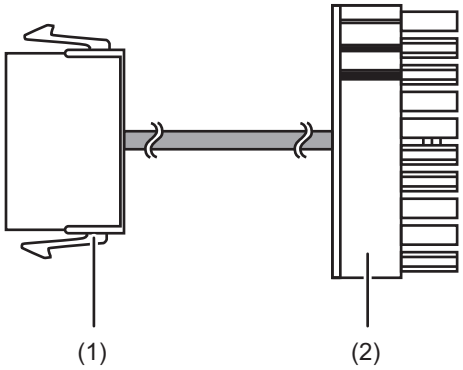

Location Number	Component
1	Connector (terminal board side)
2	Connector (fan backplane (PWR) side)

- Cable (SIG)
  Cable for the connection of the terminal board and fan backplane (SIG) to the operation panel

Figure 18-4 Cable (SIG) (for the Terminal Board and Fan Backplane to the Operation Panel)

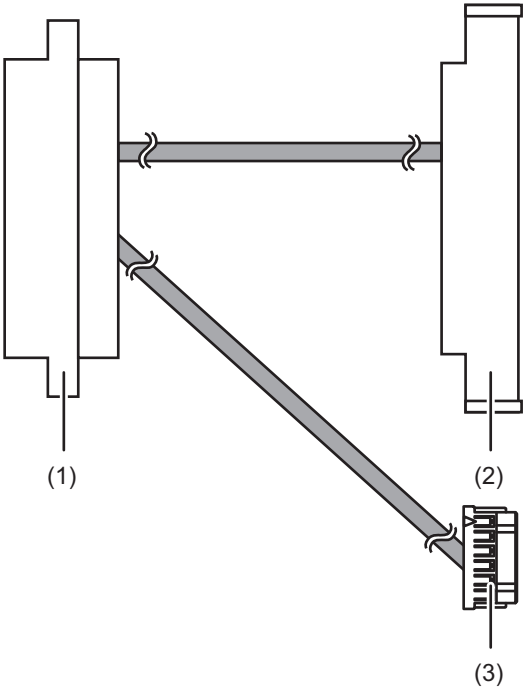

Location Number	Component
1	Connector (terminal board side)
2	Connector (fan backplane (SIG) side)
3	Connector (operation panel side)

18.2.3 Locations for the Cable Kit

The locations of cable kit connections are as follows.

Figure 18-5 Locations for the Cable Kit

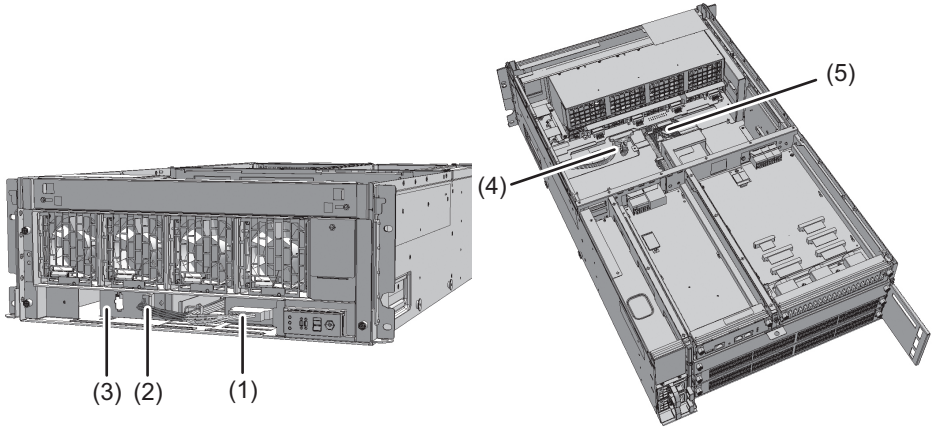

Location Number	Component	Connection
1	Cable (SIG)	Crossbar backplane unit and terminal board (SIG)
2	Cable (PWR)	Crossbar backplane unit and terminal board (PWR)
3	Terminal board	
4	Cable (SIG)	Terminal board (SIG) and fan backplane
5	Cable (PWR)	Terminal board (PWR) and fan backplane

18.3 Removing the Cable Kit

This section describes the procedure for removing the cable kit at each cable connection destination.
For the cable connection destinations, see "18.2 Configuration of the Cable Kit."
Enable the removal of the cable kit before attempting to remove it. For details, see "Chapter 7 Maintenance Flow."

Caution - Before you handle any components, wear a wrist strap to ground any static electricity. If you perform this procedure without a wrist strap, individual components or the overall system may be damaged. For details, see "1.4 Notes Regarding Static Electricity."

18.3.1 Removing the Cables for the Connection Between the Crossbar Backplane Unit and Terminal Board

Remove the cable (SIG) or cable (PWR) connecting the crossbar backplane unit and terminal board.

1. **Remove the front cover.**
   For details, see "5.5.2 Removing the Front Cover."

2. **Remove all the fan units.**
   For details, see "15.3 Removing a Fan Unit."

3. **Loosen the two screws (A in Figure 18-6) securing the upper cover, and slide the right and left stoppers (B in Figure 18-6) inward. Then, remove the upper cover (C in Figure 18-6).**

Figure 18-6 Removing the Upper Cover

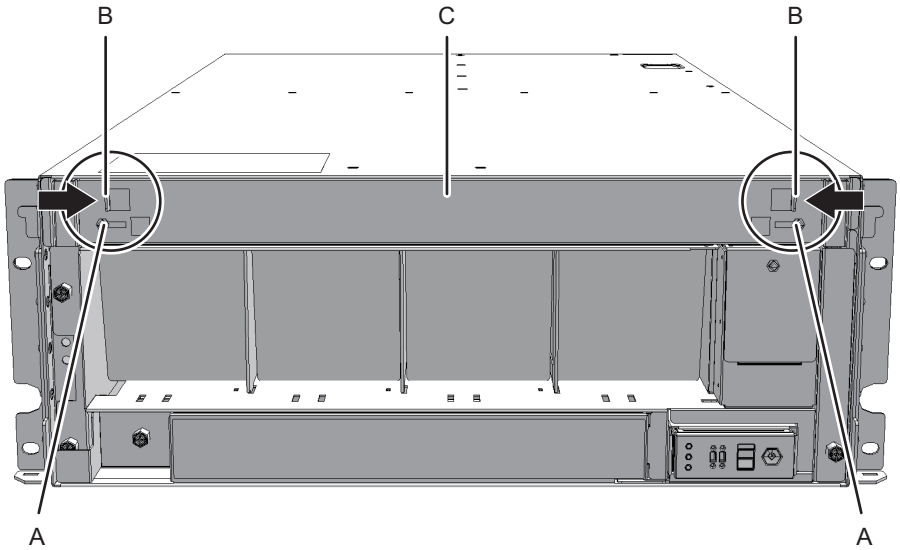

4. **Loosen the one screw (A in Figure 18-7) securing the lower cover, and slide the lower cover to the left to remove it.**

Figure 18-7 Removing the Lower Cover

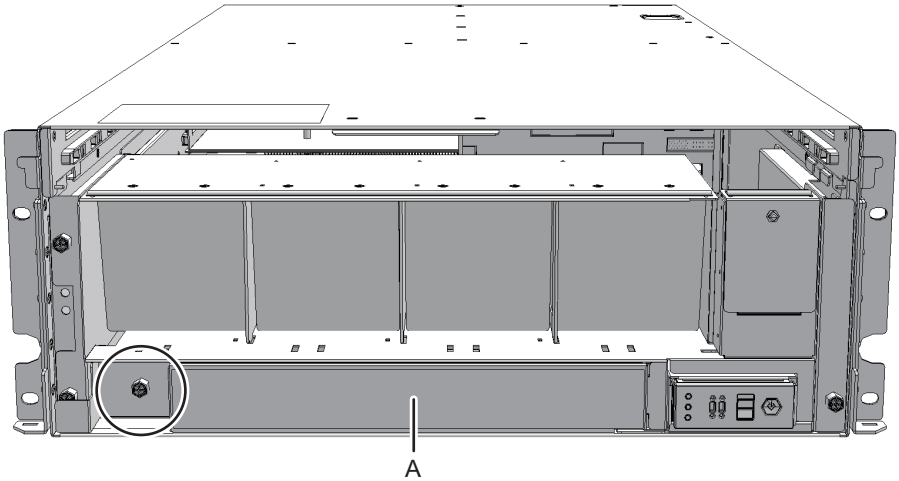

5. **Disconnect the two cables from the fan shelf.**
   Keep the disconnected cables together in the center of the shelf.

Figure 18-8 Removing the Cables

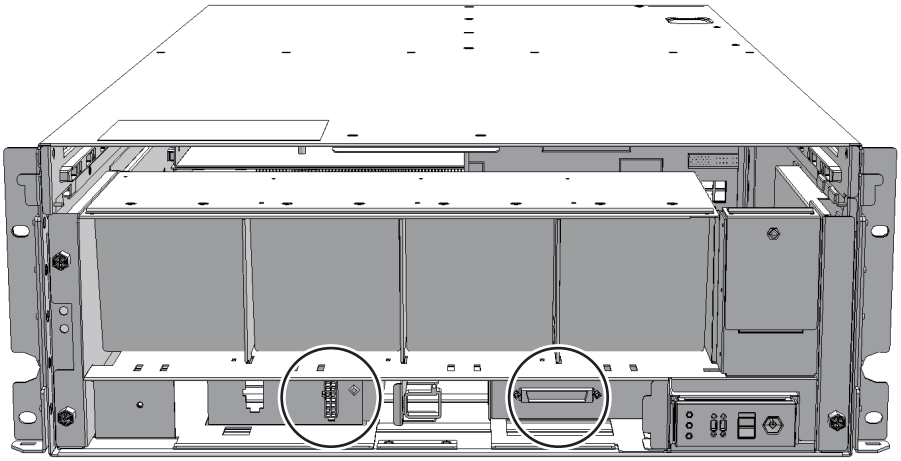

6. **Loosen the three screws securing the fan shelf and partially pull out the fan shelf.**

Figure 18-9 Removing the Fan Shelf

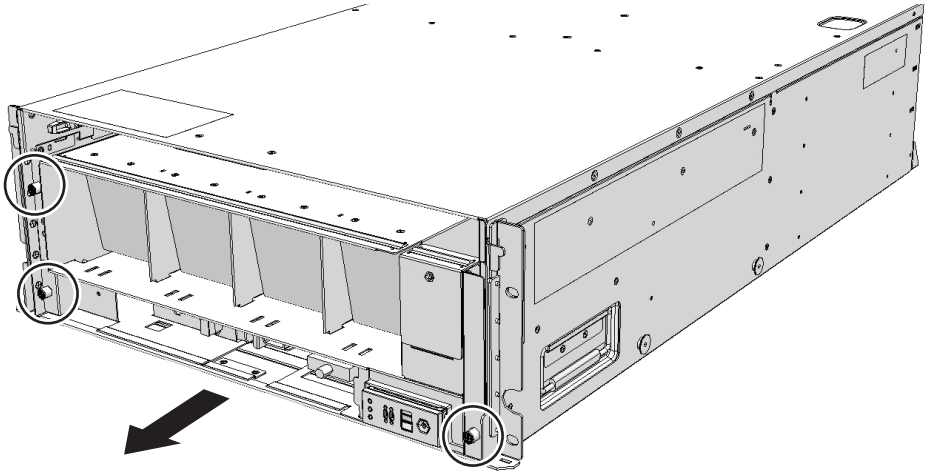

7. **Place a hand under the fan shelf to support it, and carefully remove it from the chassis.**

Note - Remove the fan shelf while paying careful attention to the two cables arranged in the center.

Note - Place the removed fan shelf on a grounded antistatic ESD mat.

---

8. **Remove the cable connected to the crossbar backplane unit from the connector.**

Figure 18-10 Removing the Cable (Cable (SIG))

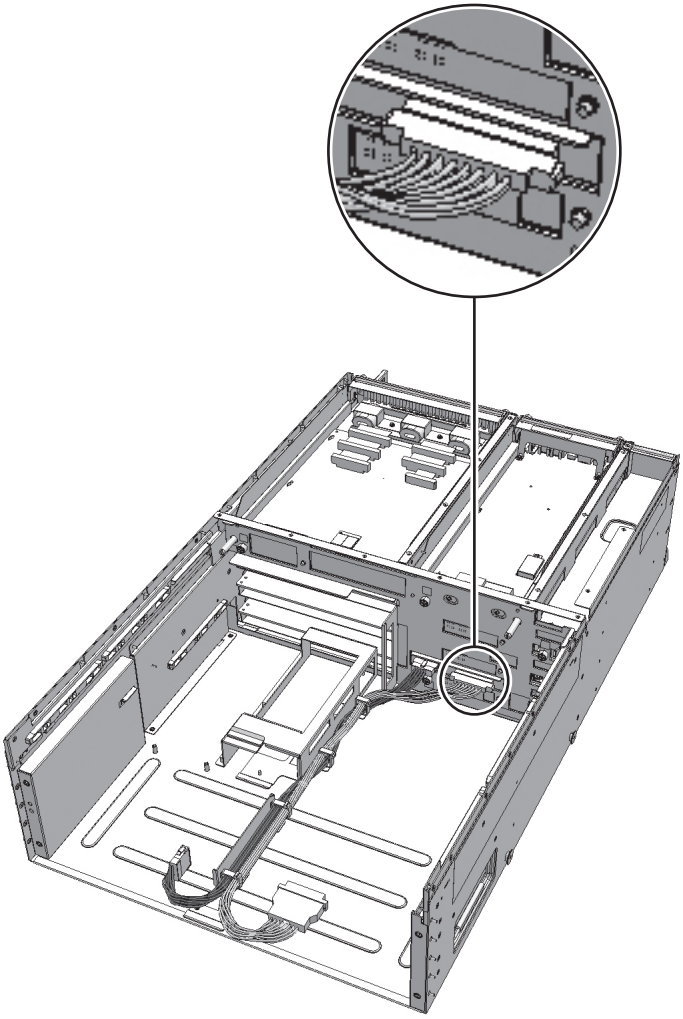

Figure 18-11 Removing the Cable (Cable (PWR))

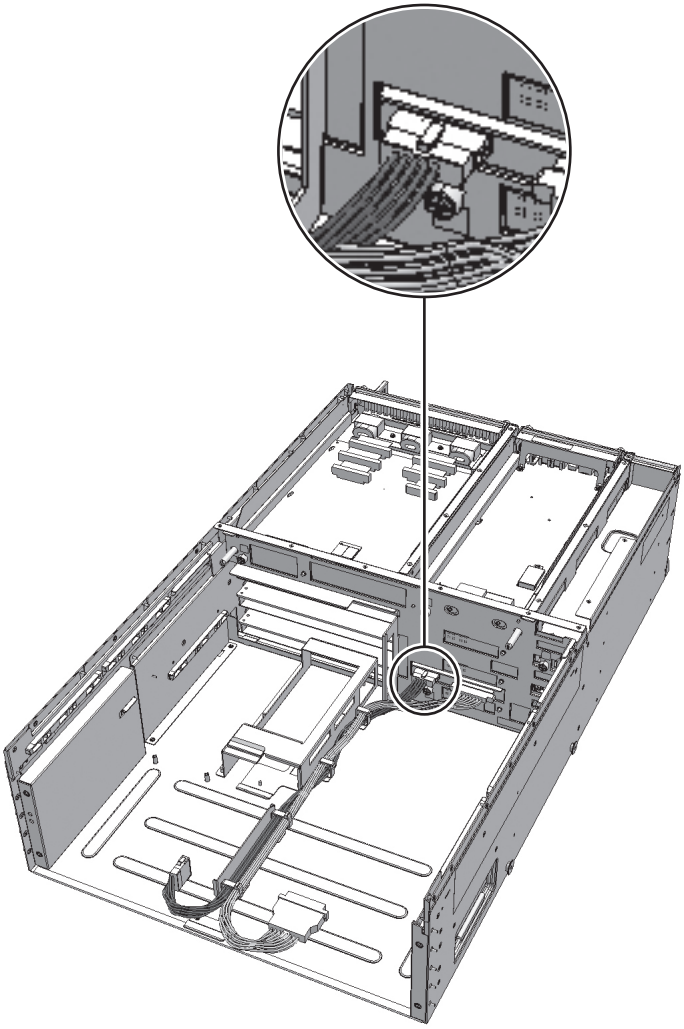

9. **Remove the cable from the clamps.**

Figure 18-12 Removing the Cables

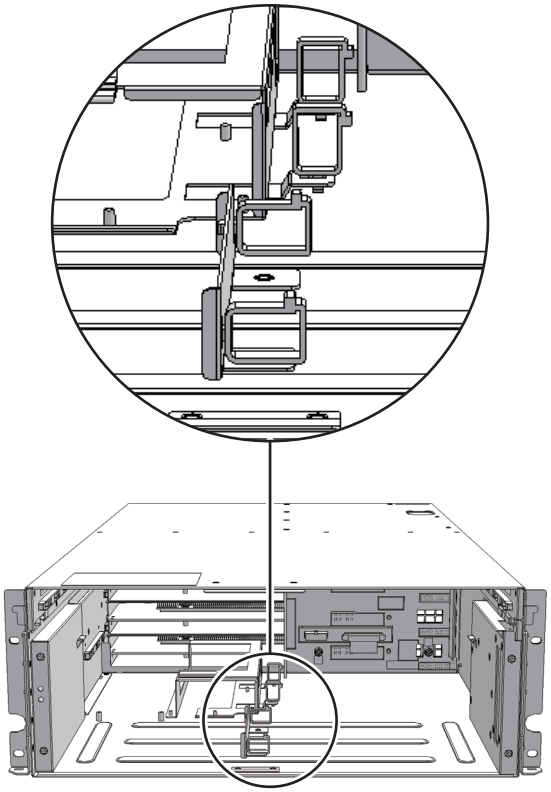

18.3.2 Removing the Cables for the Connection Between the Terminal Board and Fan Backplane

Remove the cable (SIG) or cable (PWR) connecting the terminal board and fan backplane.

1. **Remove the front cover.**
   For details, see "5.5.2 Removing the Front Cover."
2. **Remove all the fan units.**
   For details, see "15.3 Removing a Fan Unit."
3. **Loosen the two screws (A in Figure 18-13) securing the upper cover, and slide the right and left stoppers (B in Figure 18-13) inward. Then, remove the upper cover (C in Figure 18-13).**

Figure 18-13 Removing the Upper Cover

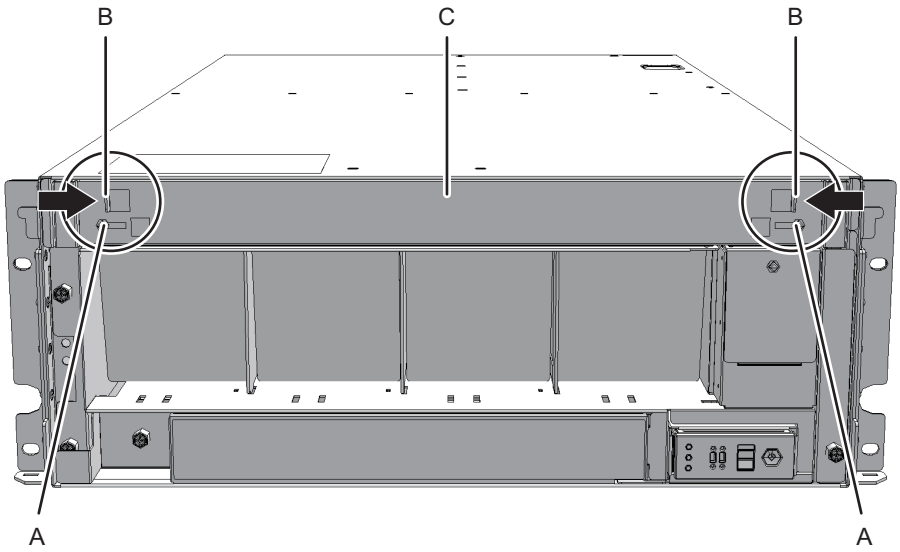

4. **Loosen the one screw (A in Figure 18-14) securing the lower cover, and slide the lower cover to the left to remove it.**

Figure 18-14 Removing the Lower Cover

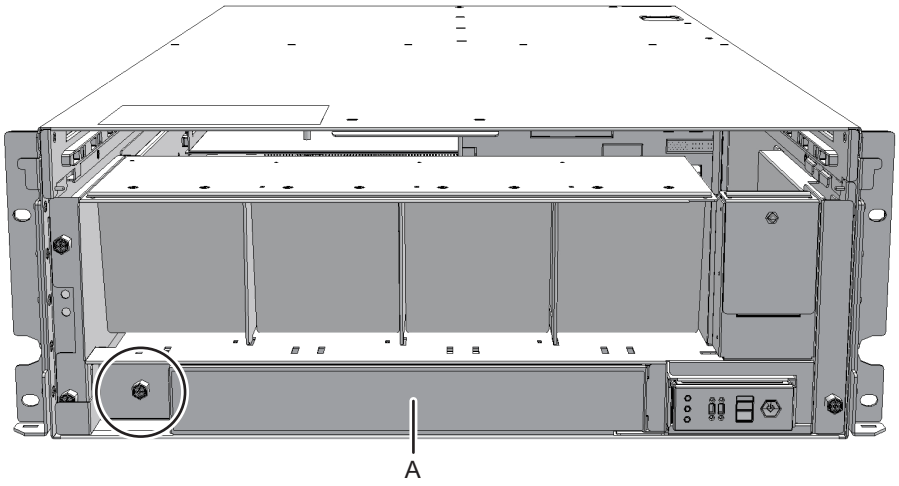

5. **Disconnect the two cables from the fan shelf.**
   Keep the disconnected cables together in the center of the shelf.

Figure 18-15 Removing the Cables

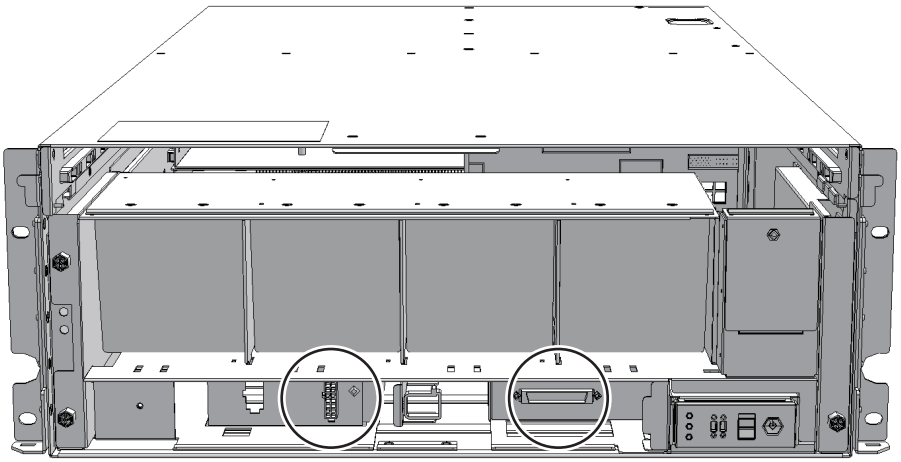

6. **Loosen the three screws securing the fan shelf and partially pull out the fan shelf.**

Figure 18-16 Removing the Fan Shelf

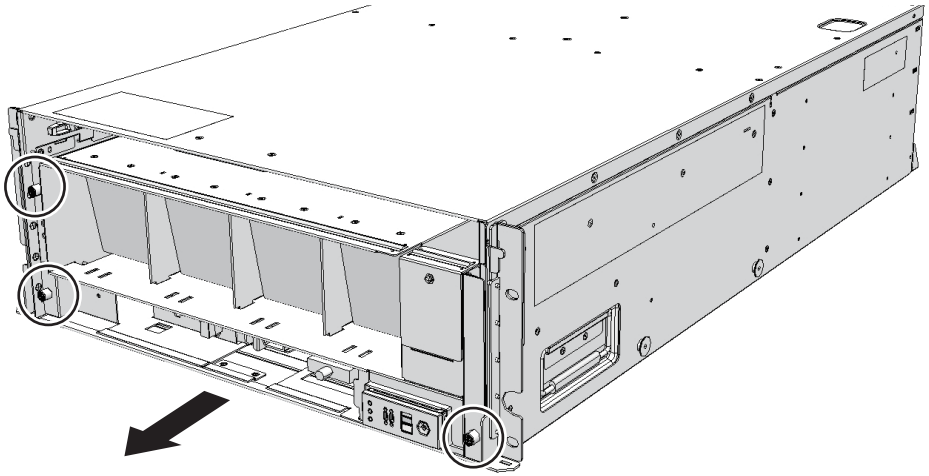

7. **Place a hand under the fan shelf to support it, and carefully remove it from the chassis.**

Note - Remove the fan shelf while paying careful attention to the two cables arranged in the center.

Note - Place the removed fan shelf on a grounded antistatic ESD mat.

---

8. **Remove the cable connecting the fan backplane from the connector.**

Figure 18-17 Removing the Cable (Cable (PWR))

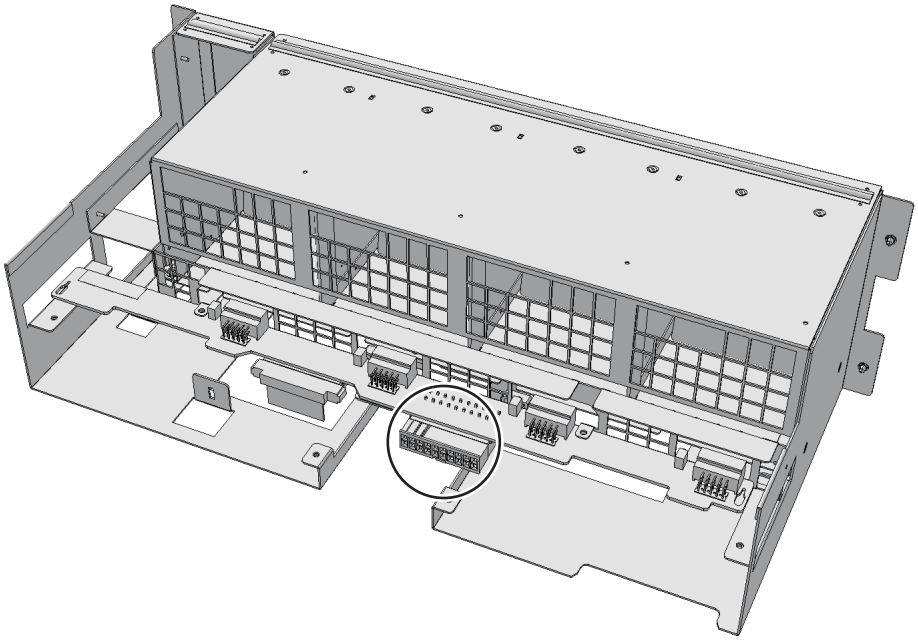

Figure 18-18 Removing the Cable (Cable (SIG))

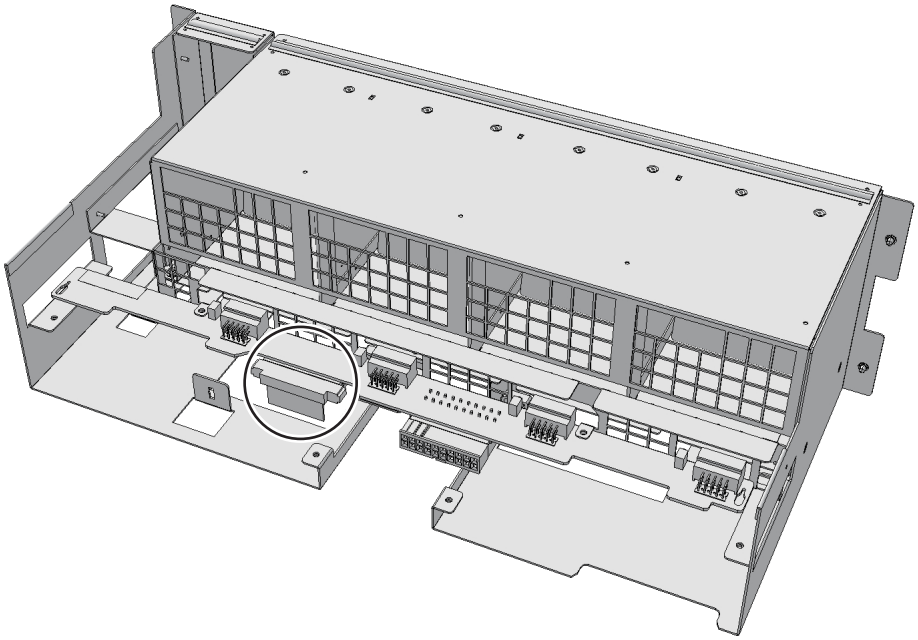

9. **Remove the cable connecting the fan shelf and operation panel from the**

connector on the operation panel.

Perform this step only when removing the cable (SIG).

To remove the cable (PWR), proceed to step 10.

Figure 18-19 Operation Panel Cable

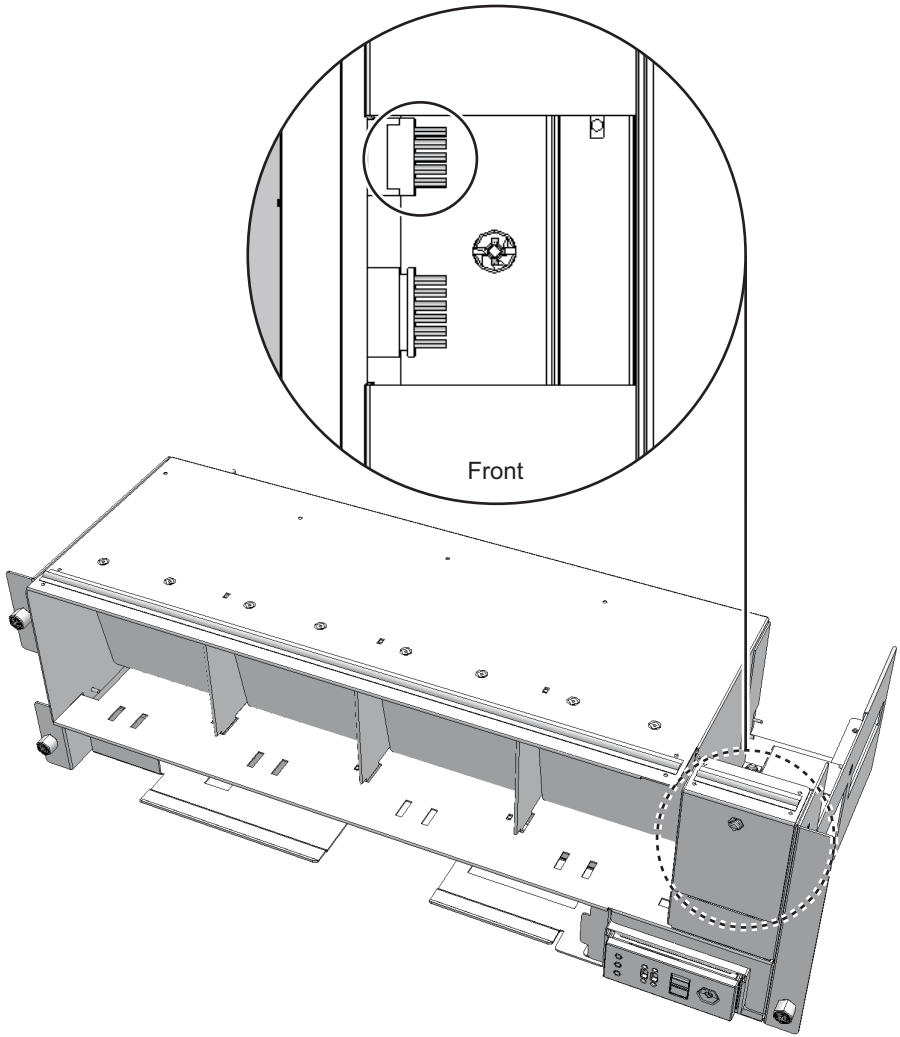

10. **Remove the cable from the terminal board.**
    - For the cable (PWR), push the connector toward the back while pushing up the lower latch (A in Figure 18-20) with a flathead screwdriver. Confirm that the lower latch has been pushed to the back of the terminal board. Push the connector toward the back while pushing down the upper latch (B in Figure 18-20) with a flathead screwdriver.

Figure 18-20 Removing the Cable (Cable (PWR))

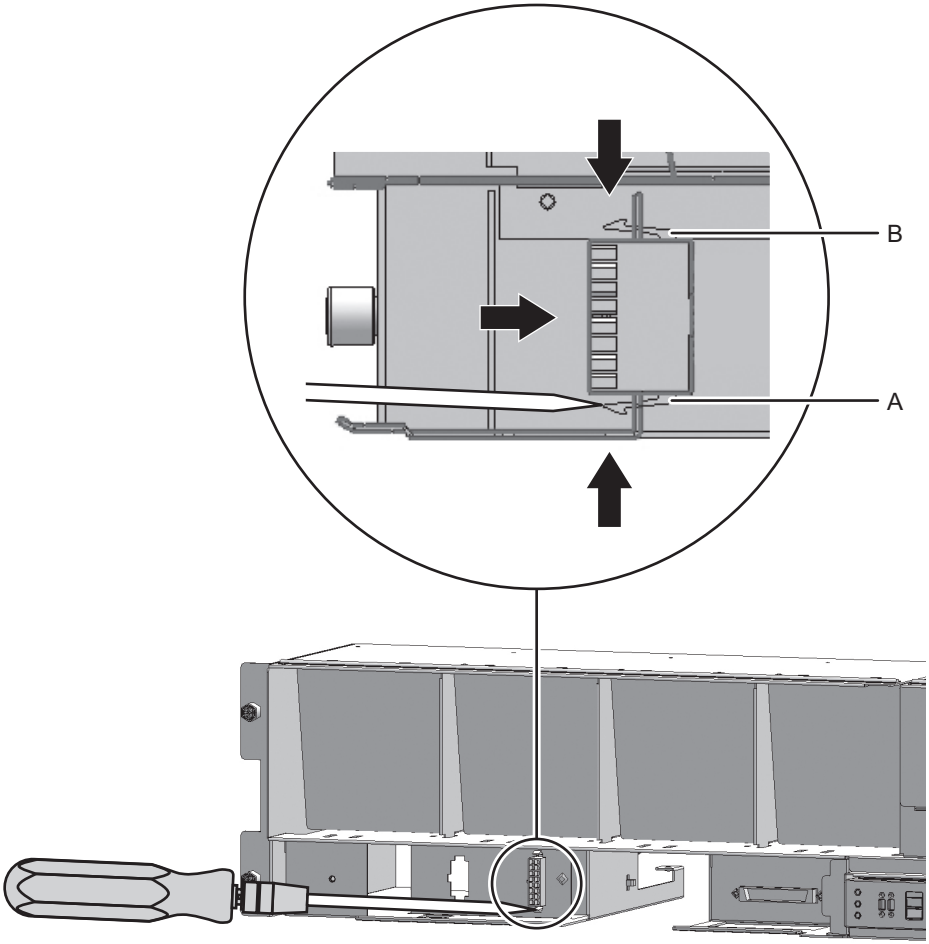

- For the cable (SIG), remove the two cable connector screws with a Phillips screwdriver (bit No. 1), and remove the cable from the terminal board.

Figure 18-21 Removing the Cable (Cable (SIG))

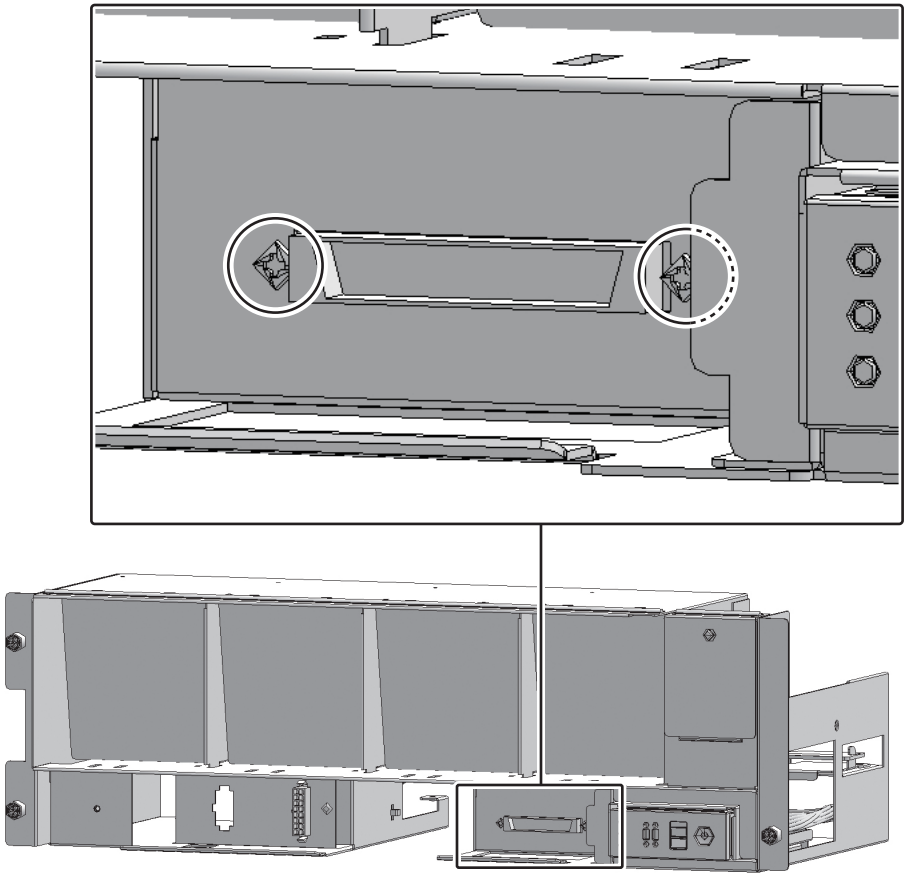

11. **Remove the cable from the clamps.**

Figure 18-22 Removing the Cable (Cable (PWR))

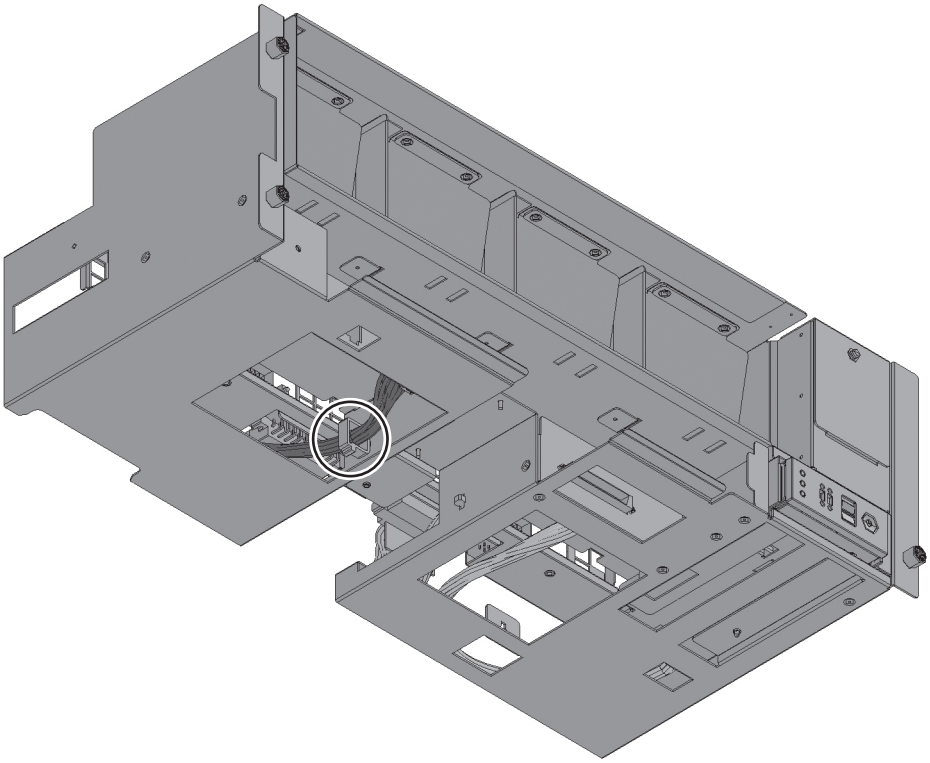

Figure 18-23 Removing the Cable (Cable (SIG))

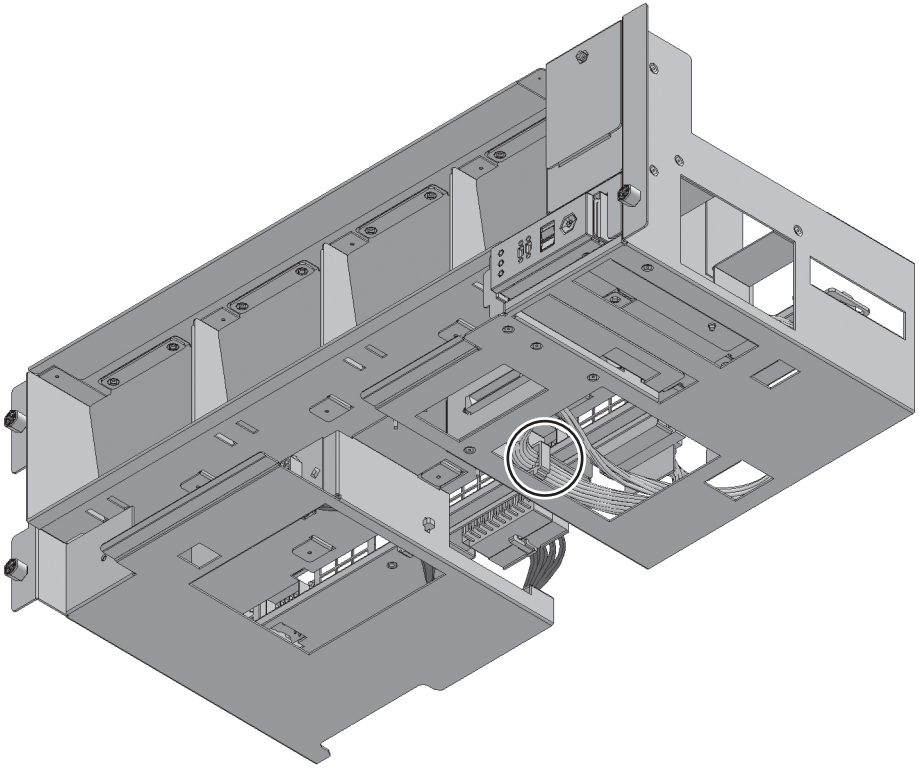

18.4 Installing the Cable Kit

This section describes the procedure for installing the cable kit at each cable connection destination.
For the cable connection destinations, see "18.2 Configuration of the Cable Kit."
Install a cable that has the same shape as the removed cable.

18.4.1 Installing a Cable Between the Crossbar Backplane Unit and Terminal Board

Install the cable (SIG) or cable (PWR) connecting the crossbar backplane unit and terminal board.

1. **Connect the cable to the connector of the crossbar backplane unit.**
   Install a cable that has the same shape as that of the removed cable.

Figure 18-24 Connector Shape (Cable (SIG))

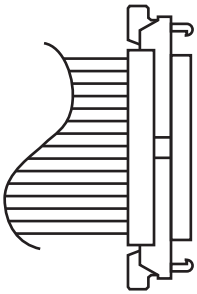

2. **Secure the cable with a clamp.**
3. **Support the fan shelf from below with one hand, and carefully insert it into the chassis.**
   Arranging the cables in the center makes it easier to install the fan shelf.
4. **Tighten the three screws securing the fan shelf.**
5. **Connect the two cables to the fan shelf.**
6. **Install the lower cover, and secure it with one screw.**
7. **Install the upper cover.**
8. **Slide the right and left stoppers of the upper cover outward, and secure the cover with two screws.**
9. **Install all the fan units.**
   For details, see "15.4 Installing a Fan Unit."
10. **Install the front cover.**
    For details, see "6.1.2 Installing the Front Cover."

18.4.2 Installing a Cable for the Connection Between the Terminal Board and Fan Backplane

Install the cable (SIG) or cable (PWR) connecting the terminal board and fan backplane.

1. **Install the cable on the terminal board.**
   - For the cable (PWR), install the connector that has latches (A in Figure 18-25) on both ends to the terminal board.
     Install the tab (B in Figure 18-25) of the connector such that it fits in the notched section (C in Figure 18-25) of the terminal board.

Figure 18-25 Installing the Cable (Cable (PWR))

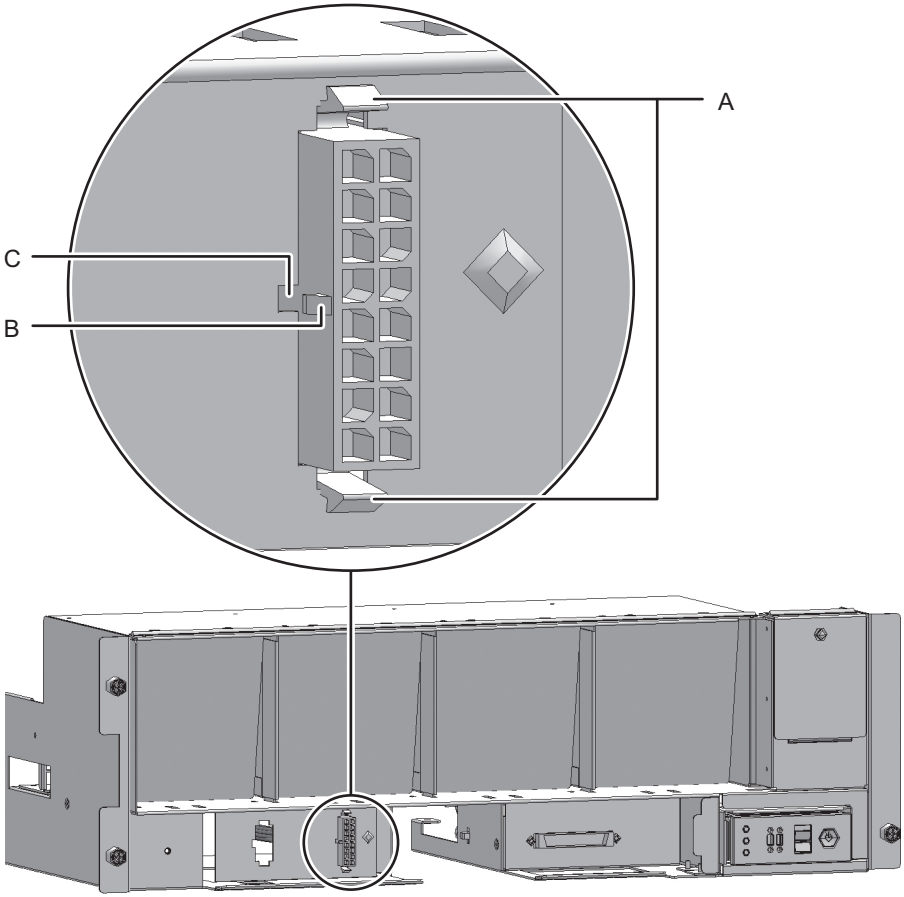

- For the cable (SIG), install the connector that has a threaded hole to the terminal board.
  Use the screw that was removed from the same location. Tighten the screw with a Phillips screwdriver (bit No. 1). When installing the connector, orient the connector so that the dot indicated by A in Figure 18-26 is on the left.

Figure 18-26 Installing the Cable (Cable (SIG))

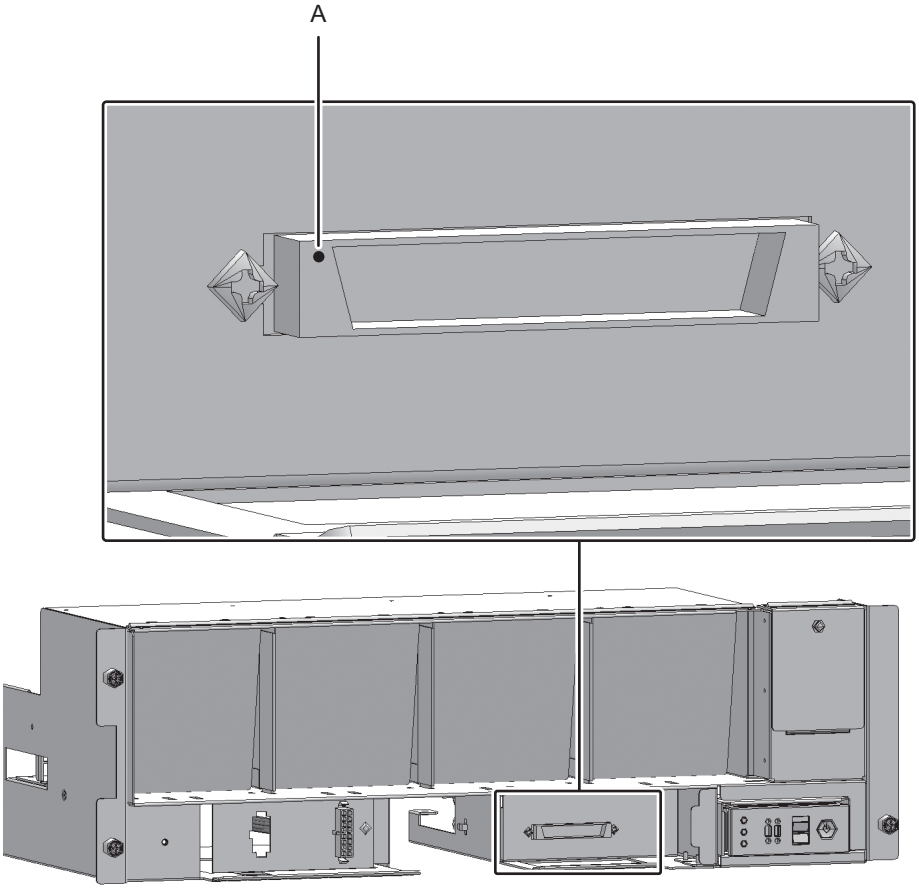

2. **Connect the cable to the connector of the fan backplane.**
3. **Connect the cable connecting the fan shelf and operation panel to the connector on the operation panel.**
   Perform this step only when installing the cable (SIG).

   To install the cable (PWR), proceed to step 4.

Figure 18-27 Operation Panel Cable

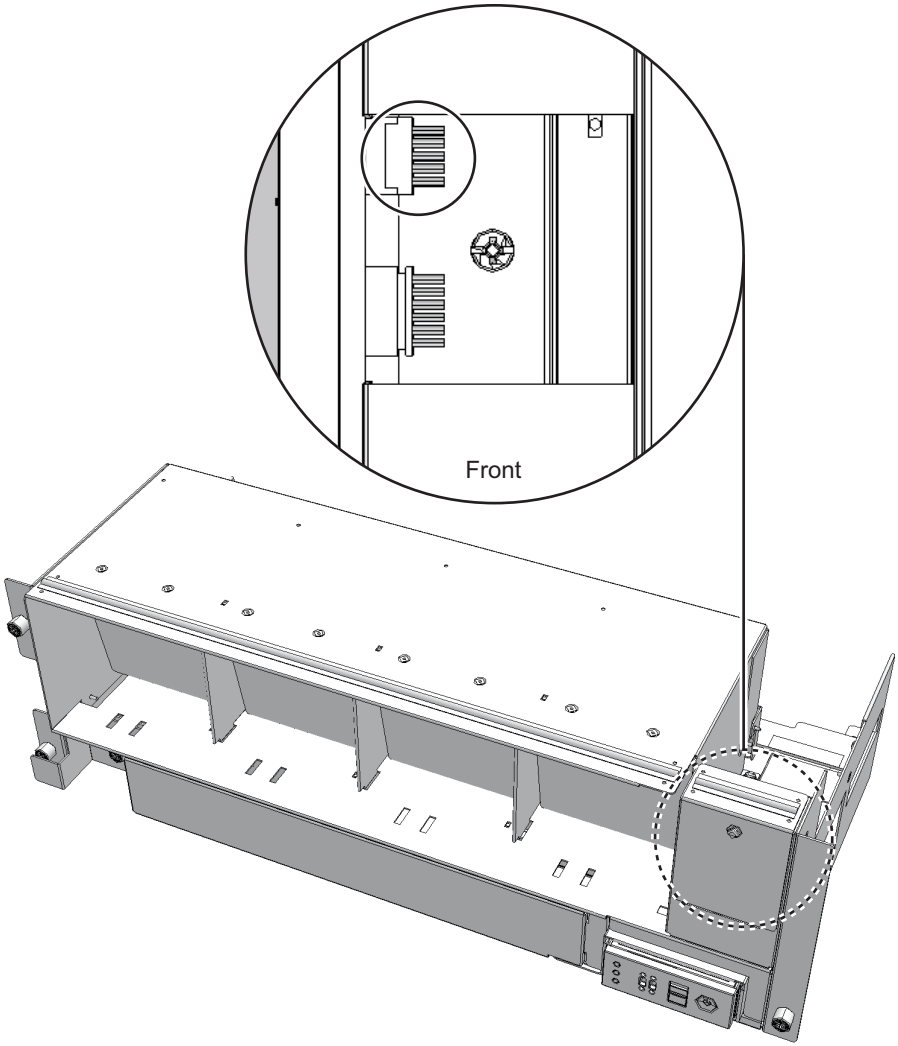

4. **Secure the cable with a clamp.**

Figure 18-28 Securing the Cable (Cable (PWR))

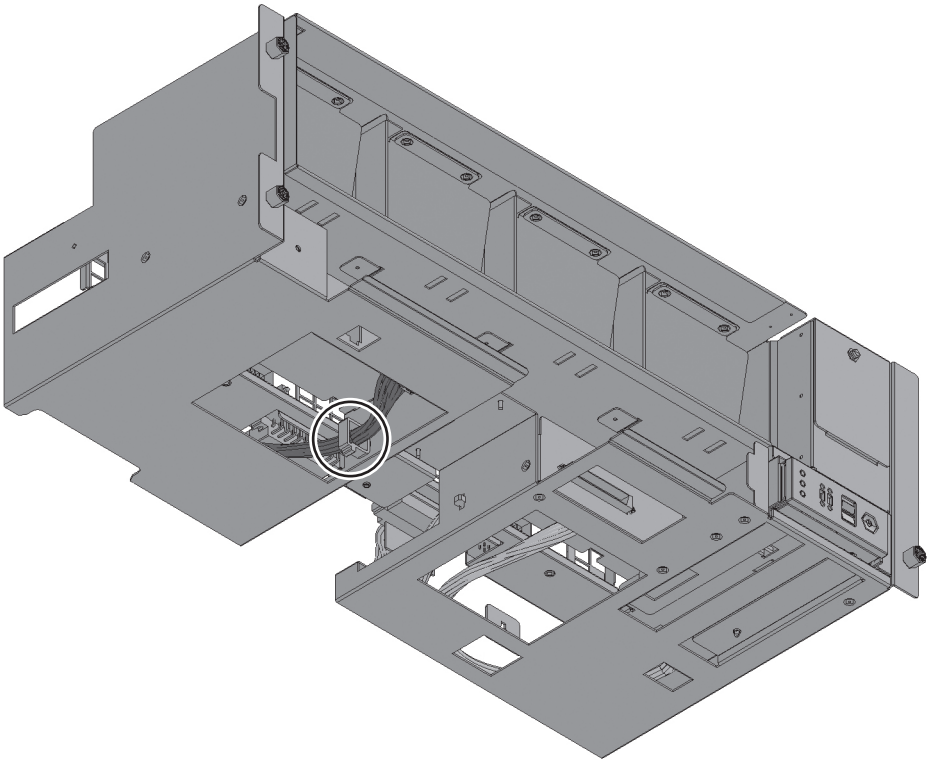

Figure 18-29 Securing the Cable (Cable (SIG))

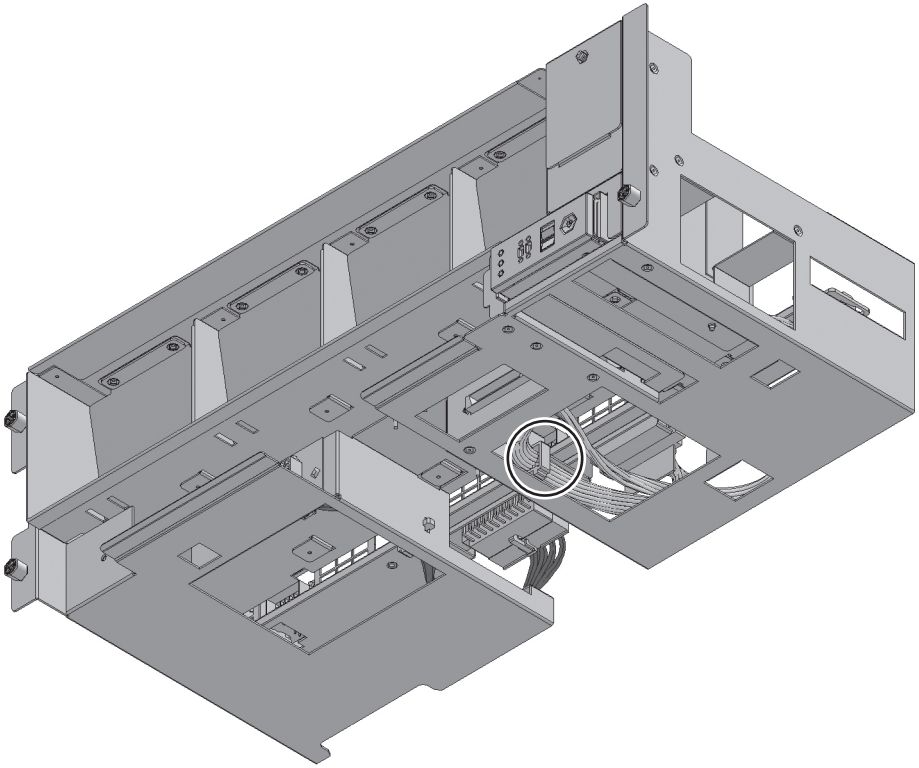

5. **Support the fan shelf from below with one hand, and carefully insert it into the chassis.**
   Arranging the cables in the center makes it easier to install the fan shelf.
6. **Tighten the three screws securing the fan shelf.**
7. **Connect the two cables to the fan shelf.**
8. **Install the lower cover, and secure it with one screw.**
9. **Install the upper cover.**
10. **Slide the right and left stoppers of the upper cover outward, and secure the cover with two screws.**
11. **Install all the fan units.**
    For details, see "15.4 Installing a Fan Unit."
12. **Install the front cover.**
    For details, see "6.1.2 Installing the Front Cover."

The FRU installation work is completed. See "Chapter 7 Maintenance Flow" to continue maintenance work.

Chapter 19

Maintaining the Crossbar Backplane Unit

This chapter describes the procedure for maintaining the crossbar backplane unit mounted in a crossbar box.

19.1 Before Maintaining a Crossbar Backplane Unit

This chapter only has descriptions of the crossbar backplane unit location and the work of removing and installing crossbar backplane units.
Before removing a FRU, see "Chapter 7 Maintenance Flow" and perform the necessary work items.
For the types of maintenance on crossbar backplane units, also see "Crossbar backplane unit" in "Table 7-2 Types of Maintenance That Can be Applied to Each Crossbar Box FRU."

19.2 Location of the Crossbar Backplane Unit

This section describes the location of the crossbar backplane unit.

Figure 19-1 Location of the Crossbar Backplane Unit

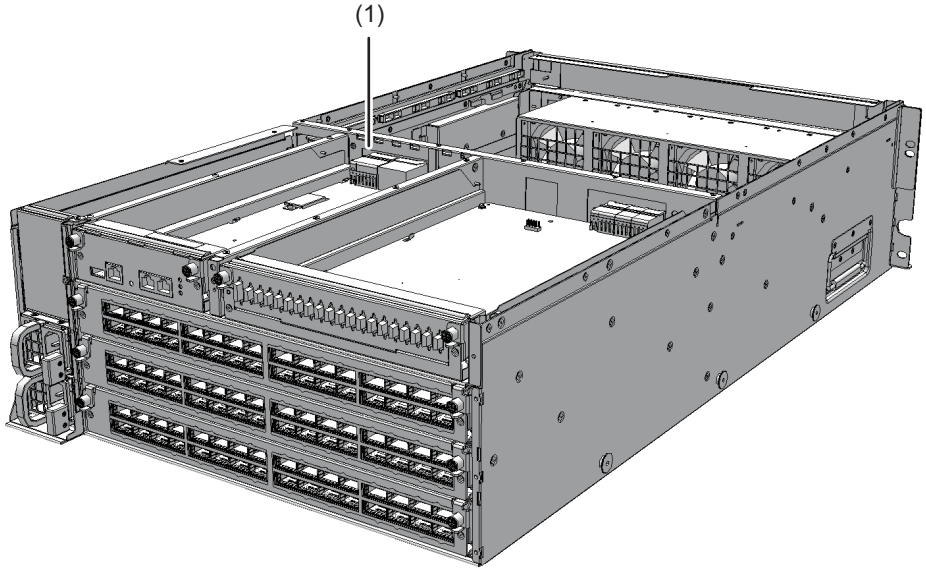

Location Number	Component
1	Crossbar backplane unit (XBBPU)

19.3 Removing the Crossbar Backplane Unit

This section describes the procedure for removing the crossbar backplane unit. Enable the removal of the crossbar backplane unit before attempting to remove it. For details, see "Chapter 7 Maintenance Flow."

Caution - Before you handle any components, wear a wrist strap to ground any static electricity. If you perform this procedure without a wrist strap, individual components or the overall system may be damaged. For details, see "Chapter 1 Before Starting Maintenance Work."

1. **Partially pull out the following components, in order, from top to bottom.**
   You do not have to remove the cables of these components.
   - XSCF unit
     For details, see "8.4 Removing the XSCF Unit."

- XSCF interface unit
  For details, see "14.4 Removing the XSCF Interface Unit."
- Crossbar unit or filler unit of the crossbar unit
  For details, see "12.3 Removing a Crossbar Unit."
- Power supply unit
  For details, see "13.3 Removing a Power Supply Unit."

2. **Remove the front cover.**
   For details, see "5.5.2 Removing the Front Cover."

3. **Remove all the fan units.**
   For details, see "15.3 Removing a Fan Unit."

4. **Loosen the two screws (A in Figure 19-2) securing the upper cover, and slide the right and left stoppers (B in Figure 19-2) inward. Then, remove the upper cover (C in Figure 19-2).**

Figure 19-2 Removing the Upper Cover

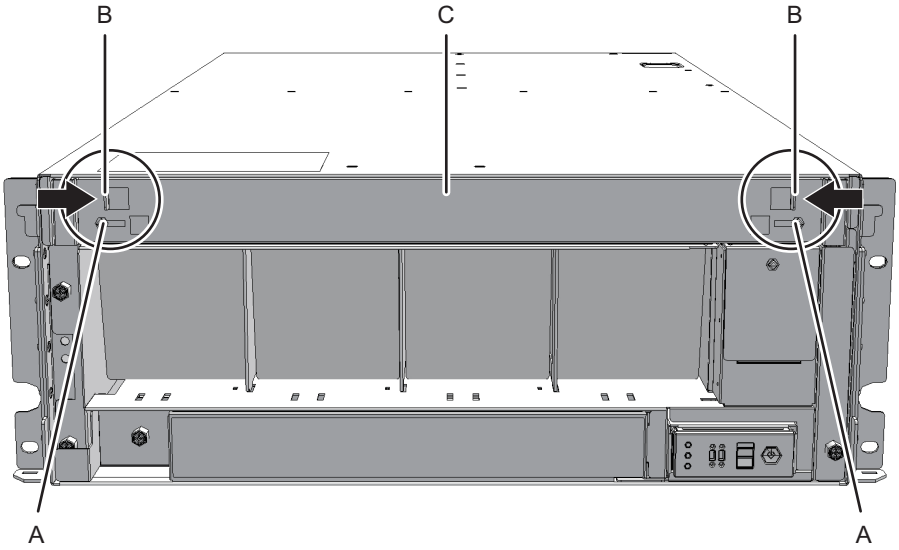

5. **Loosen the one screw (A in Figure 19-3) securing the lower cover, and slide the lower cover to the left to remove it.**

Figure 19-3 Removing the Lower Cover

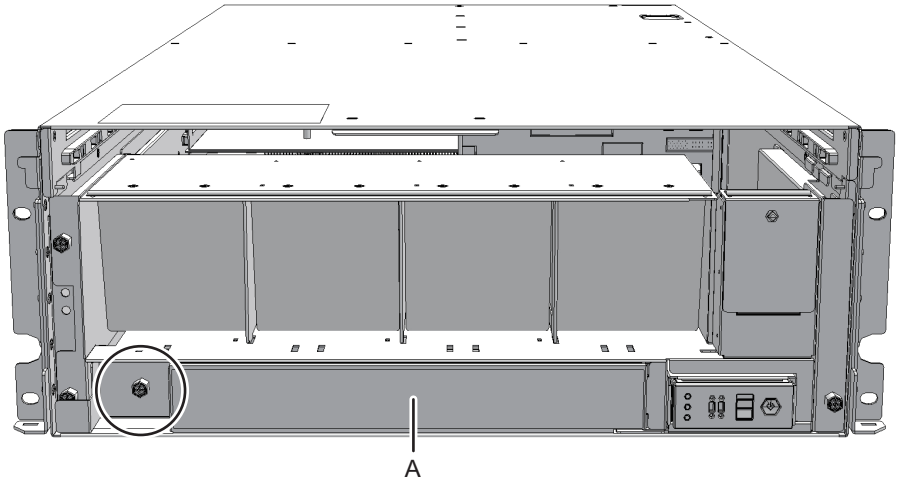

6. **Disconnect the two cables from the fan shelf.**
   Keep the disconnected cables together in the center of the shelf.

Figure 19-4 Removing the Cables

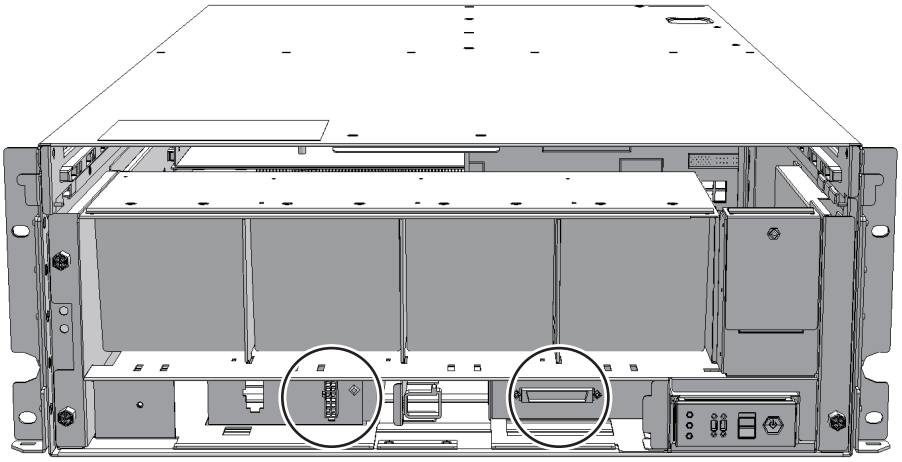

7. **Loosen the three screws securing the fan shelf and partially pull out the fan shelf.**

Figure 19-5 Removing the Fan Shelf

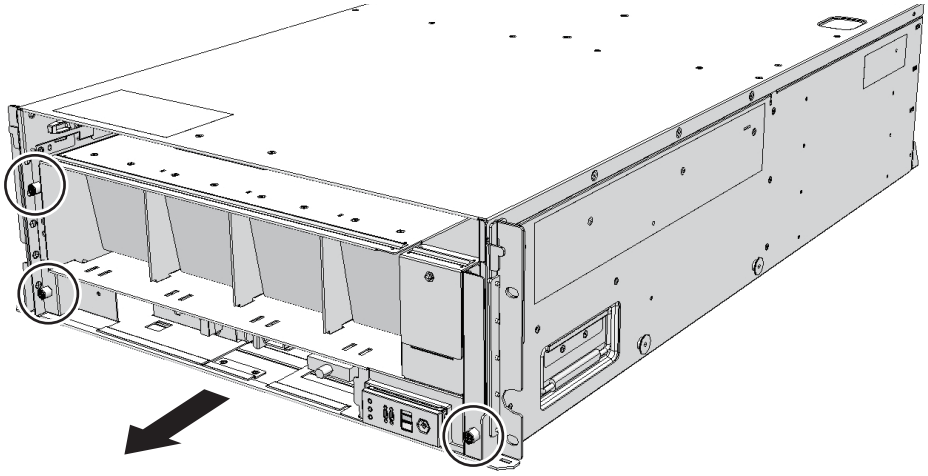

8. **Place a hand under the fan shelf to support it, and carefully remove it from the chassis.**

Note - Remove the fan shelf while paying careful attention to the two cables arranged in the center.

Note - Place the removed fan shelf on a grounded antistatic ESD mat.

---

9. **Loosen the two screws and remove the bracket (B in Figure 19-6) fixing the guide plate (A in Figure 19-6).**

Figure 19-6 Removing the Bracket

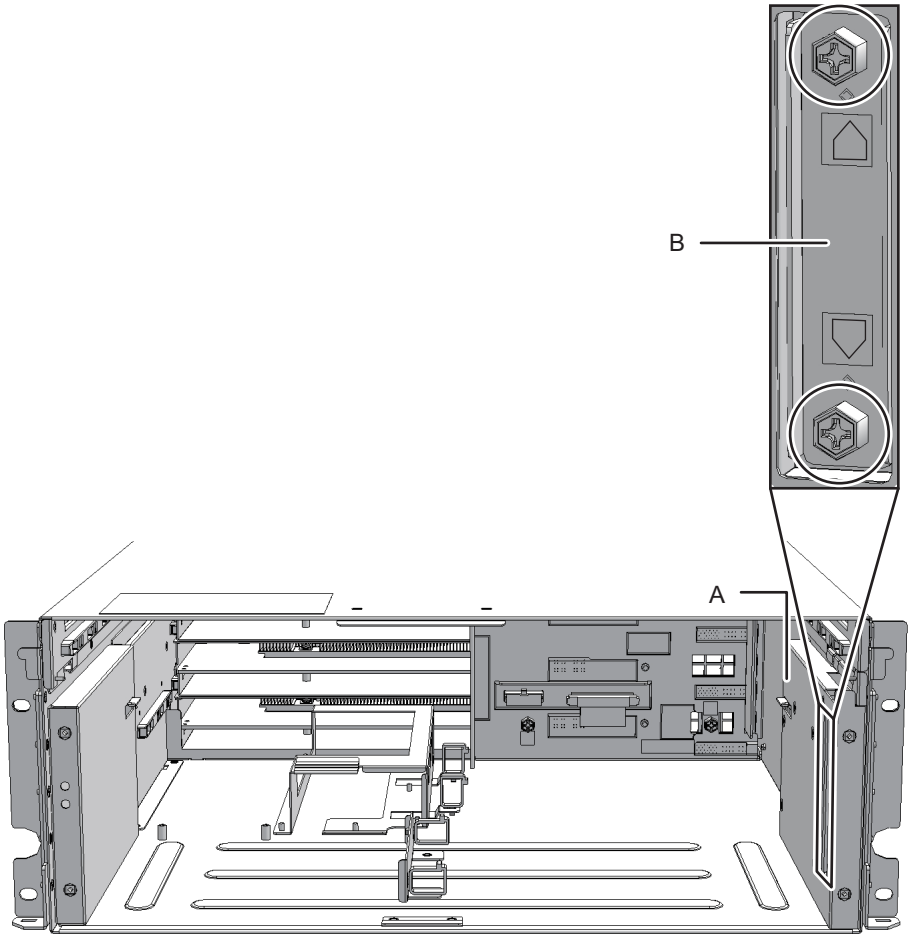

10. **Slide the guide plate (A in Figure 19-7) toward the front to remove it.**

Figure 19-7 Removing the Guide Plate

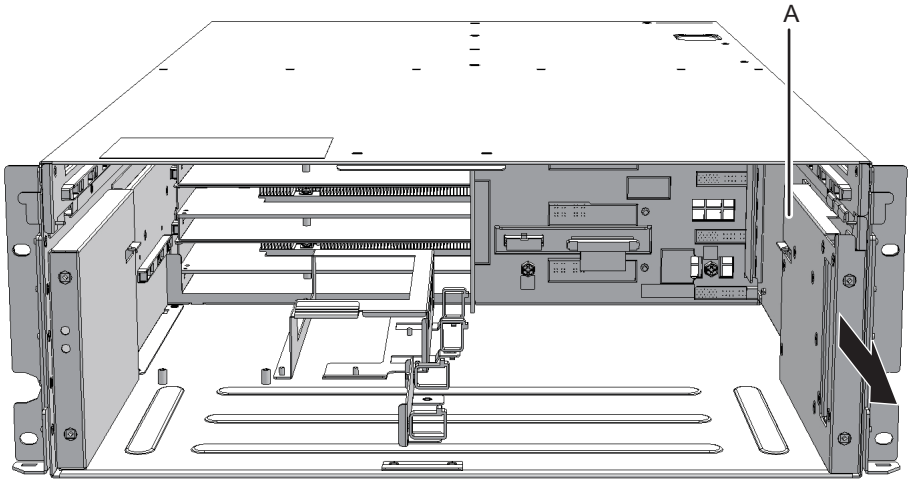

11. **Remove the cable from the clamps.**

Note - Move the clamps back to their original positions so that they do not foul the removal of the crossbar backplane unit.

Figure 19-8 Removing the Cables

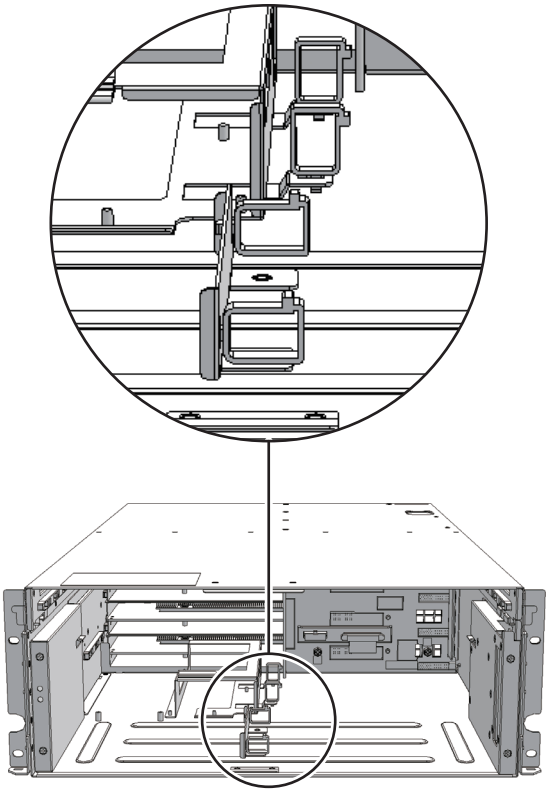

12. **Loosen the five screws securing the crossbar backplane unit, and pull the crossbar backplane unit straight out while holding the center handle (A in Figure 19-9).**

Caution - Remove the unit carefully so as to not damage any cables.

Note - Place the removed crossbar backplane unit on a grounded antistatic ESD mat.

Figure 19-9 Removing the Crossbar Backplane Unit

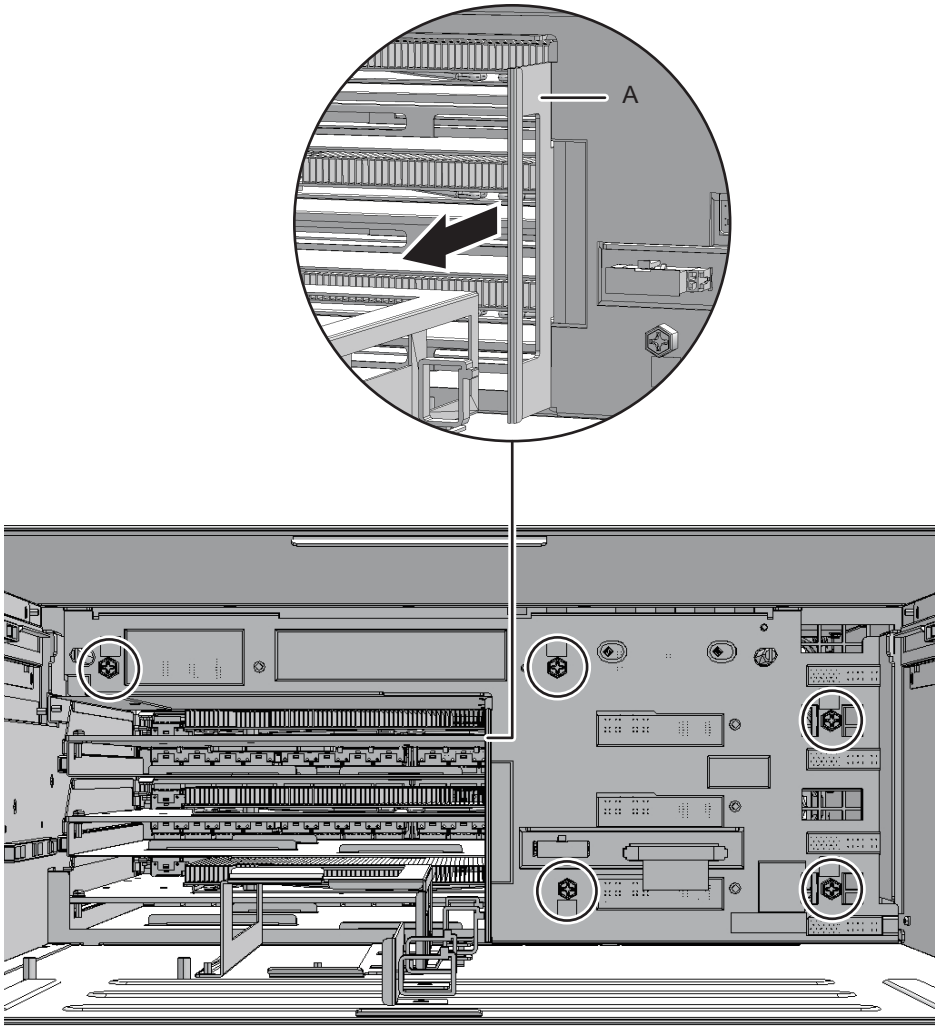

19.4 Installing the Crossbar Backplane Unit

This section describes the procedure for installing the crossbar backplane unit.

1. **Insert the crossbar backplane unit into the chassis, and tighten the five screws.**
2. **Fix the cables of the crossbar backplane unit with the clamps.**
3. **Install the guide plate by sliding it toward the rear, and tighten the two screws.**
   Check the guide plate latch to ensure that the plate is securely installed.
4. **Support the fan shelf from below with one hand, and carefully insert it into the**

chassis.
Arranging the cables in the center makes it easier to install the fan shelf.

5. **Tighten the three screws securing the fan shelf.**
6. **Connect the two cables to the fan shelf.**
7. **Install the lower cover, and secure it with one screw.**
8. **Install the upper cover.**
9. **Slide the right and left stoppers of the upper cover outward, and secure the cover with two screws.**
10. **Install all the fan units.**
    For details, see "15.4 Installing a Fan Unit."
11. **Install the front cover.**
    For details, see "6.1.2 Installing the Front Cover."
12. **Reinstall the following components in their original positions in the order shown.**
    - Power supply unit
      For details, see "13.4 Installing a Power Supply Unit."
    - Crossbar unit or filler unit of the crossbar unit
      For details, see "12.4 Installing a Crossbar Unit."
    - XSCF interface unit
      For details, see "14.5 Installing the XSCF Interface Unit."
    - XSCF unit
      For details, see "8.6 Installing the XSCF Unit."

The FRU installation work is completed. See "Chapter 7 Maintenance Flow" to continue maintenance work.

Chapter 20

Maintaining the Dedicated Power Distribution Unit Mounted on the Rack for Expanded Connection

This chapter describes the procedure for maintaining the dedicated power distribution unit (PDU) mounted on the rack for expanded connection.

20.1 Before Maintaining a Dedicated Power Distribution Unit

This chapter only has descriptions of the configuration of the dedicated power distribution unit and the work of removing and installing dedicated power distribution units.
Before removing a FRU, see "Chapter 7 Maintenance Flow" and perform the necessary work items.
For the types of maintenance on the dedicated power distribution units, also see "Dedicated power distribution unit" in "Table 7-2 Types of Maintenance That Can be Applied to Each Crossbar Box FRU."

20.2 Configuration of the Dedicated Power Distribution Unit

This section describes the configuration and location of the PDU.
The PDU is installed on the rack for expanded connection. It is compatible with both single- and three-phase power feeds.

Figure 20-1 Locations of the PDU (SPARC M12-2S)

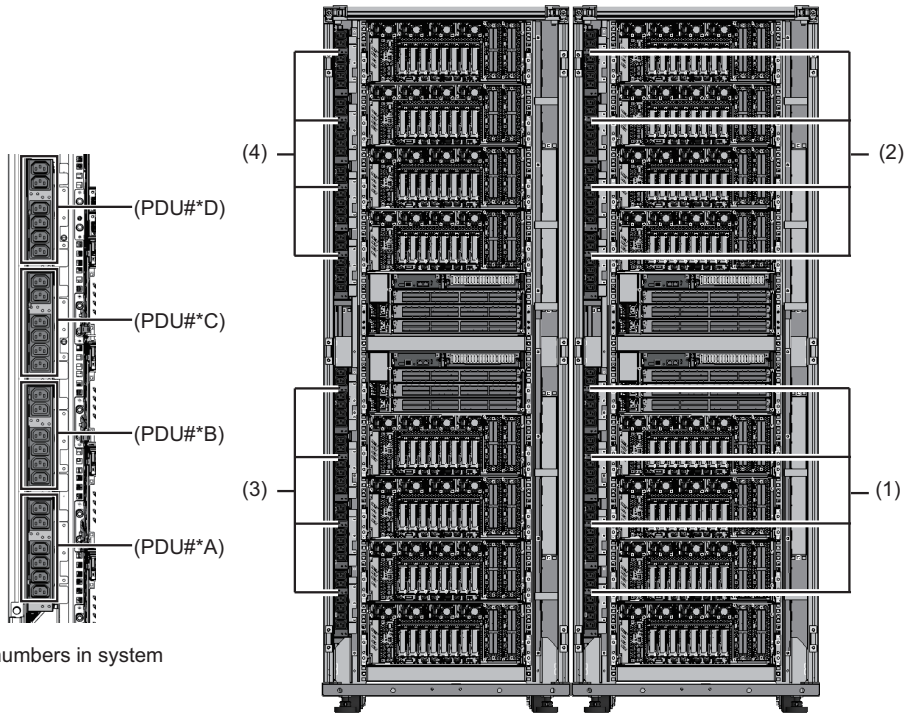

PDU numbers in system

Location Number	Component	Quantity For Single-Phase Power Feed	For Three-Phase Power Feed
1	Dedicated power distribution unit (PDU#0A to #0C or #0D) (*1)	4	3
2	Dedicated power distribution unit (PDU#1A to #1C or #1D) (*1)	4	3
3	Dedicated power distribution unit (PDU#2A to #2C or #2D) (*1) (*2)	4	3
4	Dedicated power distribution unit (PDU#3A to #3C or #3D) (*1) (*2)	4	3

*1 For single-phase power feed, four PDUs (PDU#*A to D) are mounted in the same system. For three-phase power feed, three PDUs (PDU#*A to C) are mounted.
*2 This is mounted when the two expanded connection racks have been installed.

Figure 20-2 Locations of the PDU (SPARC M10-4S)

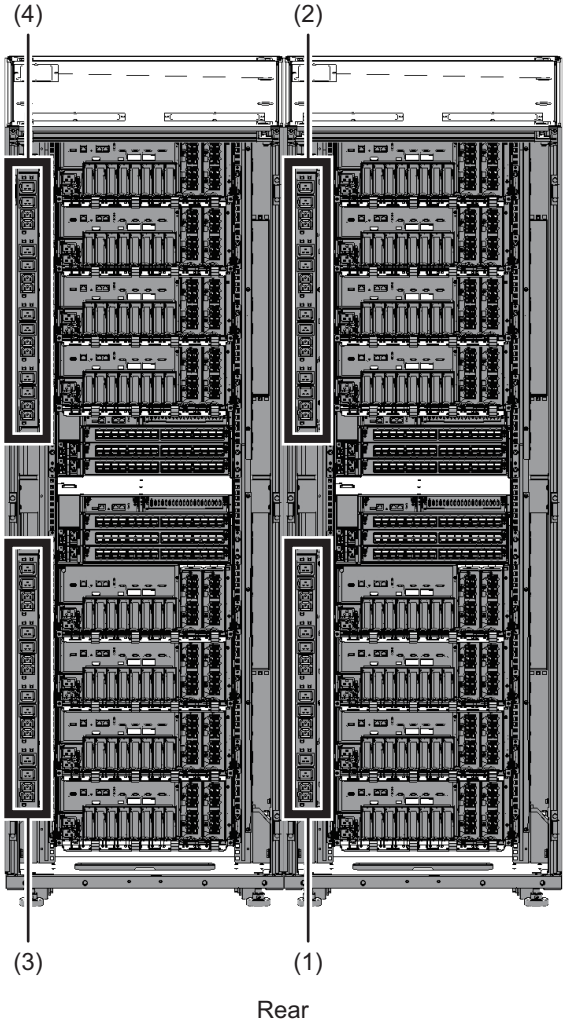

Location Number	Component
1	Dedicated power distribution unit (PDU#0)
2	Dedicated power distribution unit (PDU#1)
3	Dedicated power distribution unit (PDU#2) (*1)
4	Dedicated power distribution unit (PDU#3) (*1)

*1 This is mounted when the two expanded connection racks have been installed.

20.2.1 CB Switches on the Dedicated Power Distribution Unit

The PDU has circuit breaker switches (CB switches) on it. Pull up a CB switch to cut off electricity. Push it in to have electricity supplied.

- **In the case of the SPARC M12-2S**
  A in Figure 20-3 shows the locations of CB switches. There are six CB switches per PDU. For single-phase power feed, 8 PDUs are mounted per rack and there are 48 CB switches. For three-phase power feed, 6 PDUs are mounted per rack, and there are 36 CB switches.
  (For three-phase power feed, the number of mounted PDUs is different, but the locations of CB switches on the PDU are the same.)
- **In the case of the SPARC M10-4S**
  A in Figure 20-4 shows the locations of CB switches for single-phase power feed. Also, B in Figure 20-4 shows the locations of CB switches for three-phase power feed. There are 12 CB switches per PDU, and 24 CB switches per rack.

Figure 20-3 Locations of CB Switches on the PDU (SPARC M12-2S)

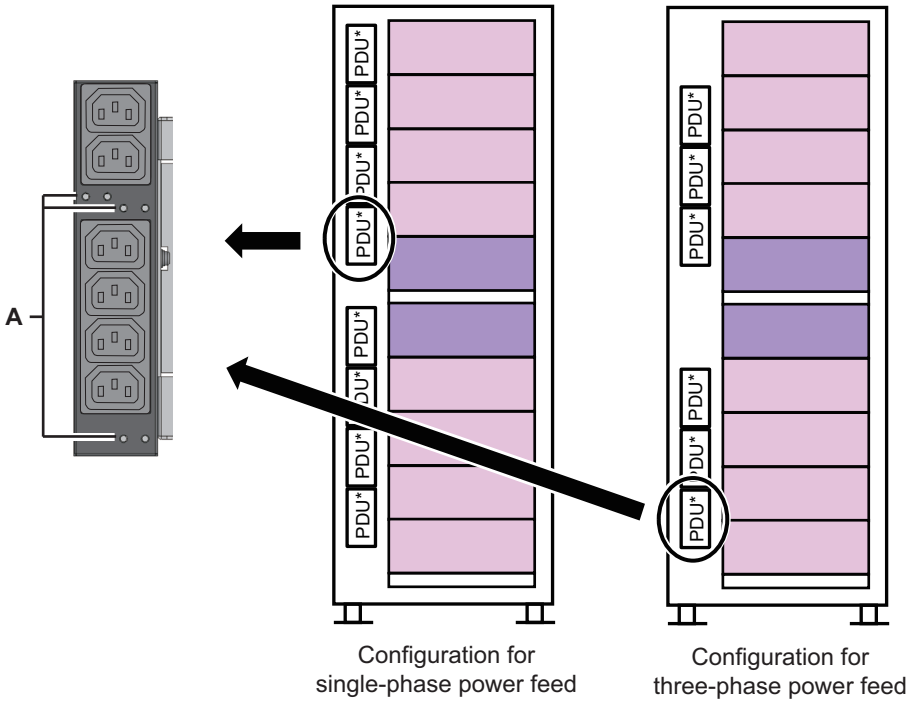

Figure 20-4 Locations of CB Switches on the PDU (SPARC M10-4S)

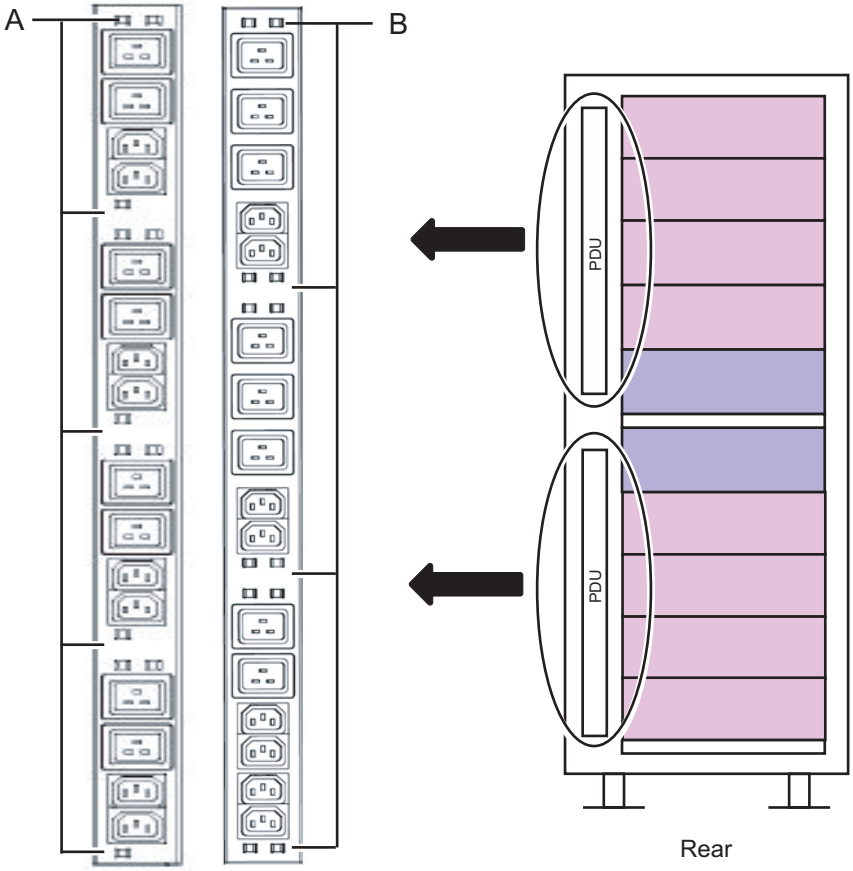

20.3 Removing the Dedicated Power Distribution Unit

This section describes the procedure for removing the dedicated power distribution unit.
Enable the removal of the dedicated power distribution unit before attempting to remove it. For details, see "Chapter 7 Maintenance Flow."

Caution - Before you handle any components, wear a wrist strap to ground any static electricity. If you perform this procedure without a wrist strap, individual components or the overall system may be damaged. For details, see "1.4 Notes Regarding Static Electricity."

Caution - Two people must be present when the power cords are to be removed. If you perform this work alone, you may injure yourself or cause damage to the PDU because the PDU is heavy.

20.3.1 For the SPARC M12-2S

1. **Remove all the power cords of the SPARC M12-2S and crossbar box from the PDU requiring maintenance.**
2. **Remove the three PDU screws.**

Figure 20-5 PDU Screws

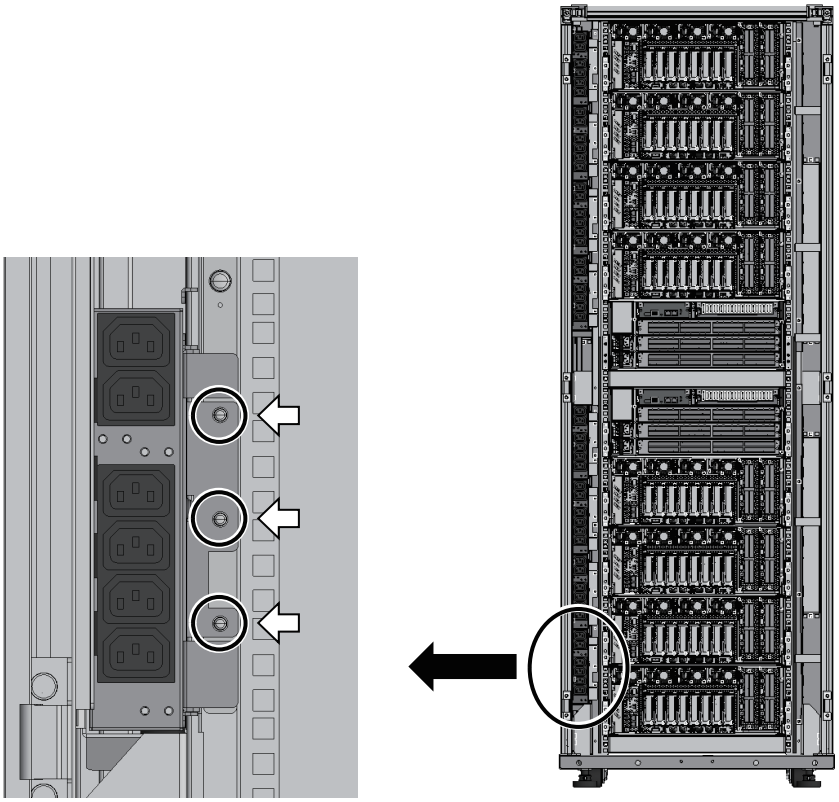

3. **Grasp the tabs on the right side of the PDU and pull it out.**

Figure 20-6 Pulling Out the PDU

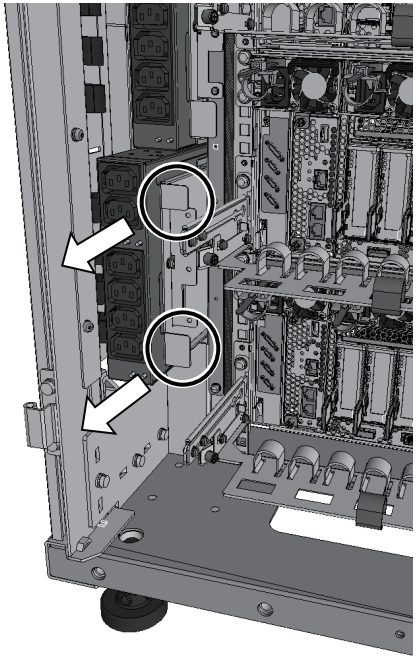

4. **Remove all the power cords from the rear of the PDU.**

Figure 20-7 Power Cord of the PDU

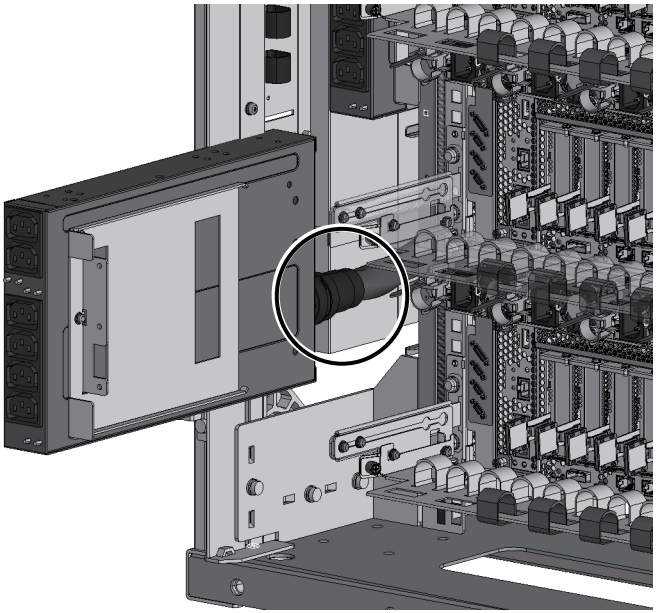

Turn the ring (A in Figure 20-8) counterclockwise to pull out each power cord connected to the PDU.

Figure 20-8 PDU Power Cord Connector

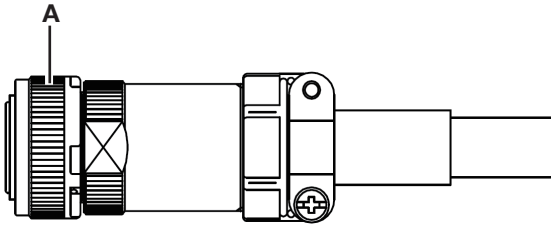

20.3.2 For the SPARC M10-4S

1. **Remove all the power cords of the SPARC M10-4S and crossbar box from the PDU requiring maintenance.**
2. **Remove the four PDU screws.**

Figure 20-9 PDU Screws

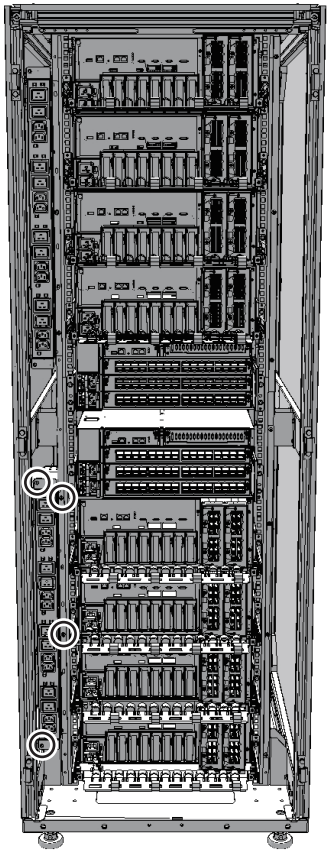

3. **Grasp the top and bottom of the PDU, and pull it out.**

Figure 20-10 Pulling Out the PDU

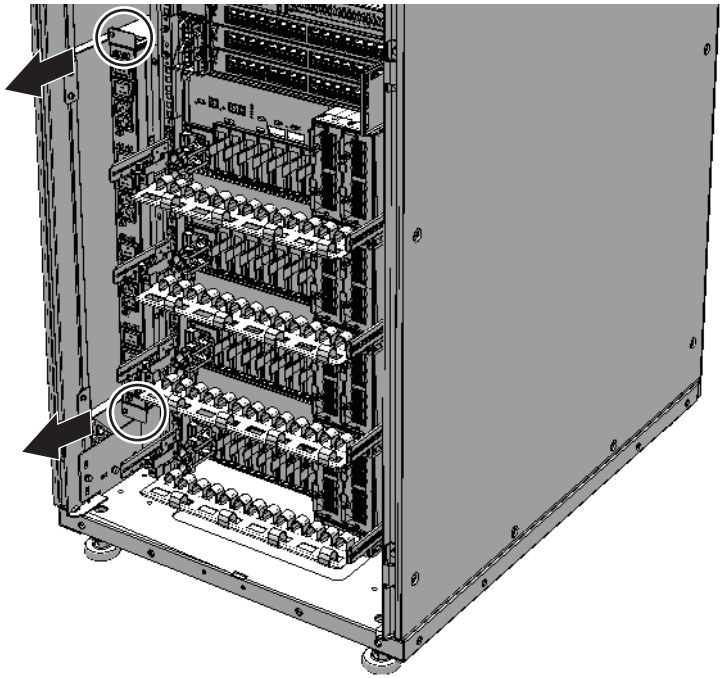

4. **Remove all the power cords from the rear of the PDU.**

Note - Hold the plug of a power cord, and pull the plug straight out.

Figure 20-11 Power Cord of the PDU

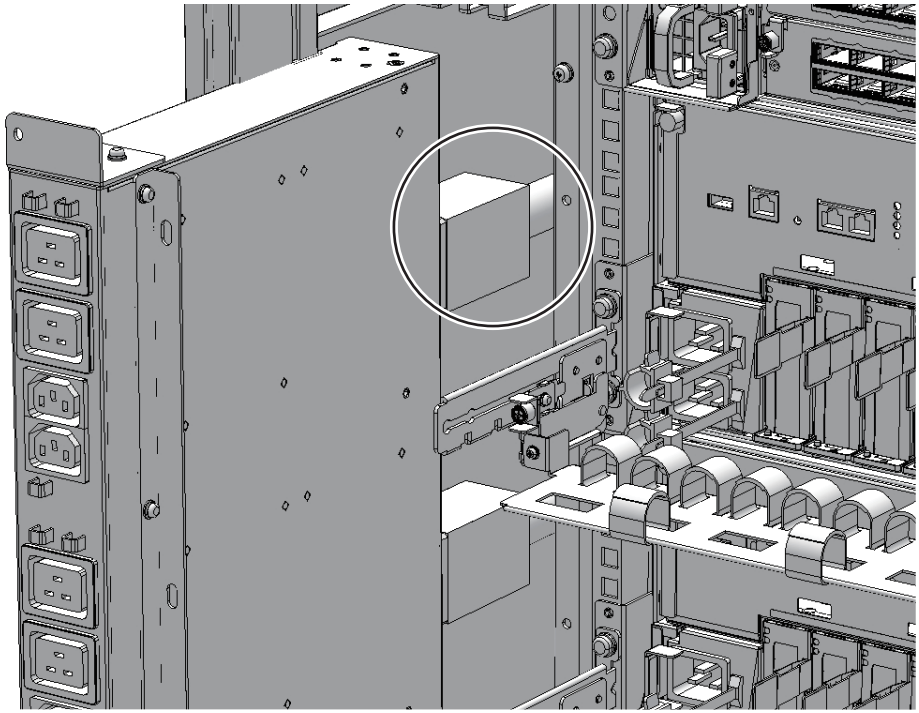

The number of power cords and the plug type may vary depending on the power environment, as follows:

- **For a single-phase power feed:**
  Four power cords are connected to the PDU. To pull them out, push the upper and lower latches (A in Figure 20-12).

Figure 20-12 Power Cord Connector for Single-Phase Power Feed

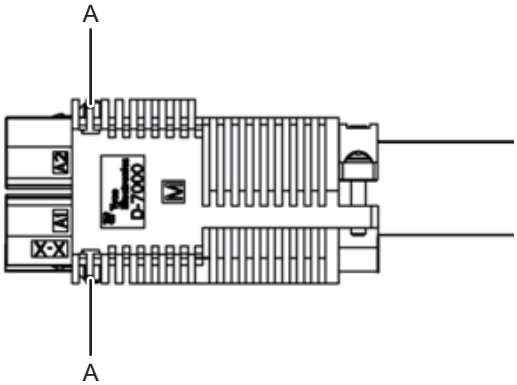

- **For a three-phase power feed:**
  Three power cords are connected to the PDU. To pull them out, turn the ring

(A in Figure 20-13) counterclockwise.

Figure 20-13 Power Cord Connector for Three-Phase Power Feed

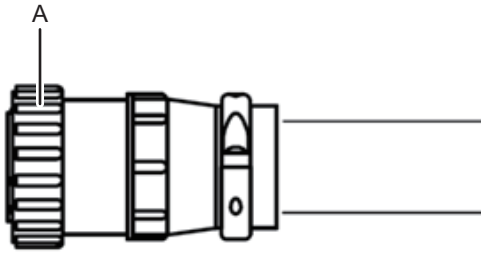

20.4 Installing the Dedicated Power Distribution Unit

This section describes the procedure for installing a PDU.

1. **Connect all the power cords to the rear of the PDU.**

Note - Hold the plug of a power cord, and insert the plug straight into the socket.

- **In the case of the SPARC M12-2S**
  Connect a power cord to the PDU. Hold the plug to install a power cord, and secure it by turning the ring clockwise.
- **In the case of the SPARC M10-4S with single-phase power feed**
  Connect four power cords to the PDU.
- **In the case of the SPARC M10-4S with three-phase power feed**
  Connect three power cords to the PDU. Hold the plug to install a power cord, and secure it by turning the ring clockwise.

Note - Ensure that the power cords are correctly connected and secure.

---

2. **Install the PDU into the rack for expanded connection.**
3. **Install the three PDU screws for the SPARC M12-2S or the four screws for the SPARC M10-4S.**
4. **Install all the power cords from the SPARC M12-2S or SPARC M10-4S and crossbar box to the PDU requiring maintenance.**

Note - Connect the power cords in their original positions by referring to the record that you made before the start of maintenance.

The FRU installation work is completed. See "Chapter 7 Maintenance Flow" to continue maintenance work.

Appendix A

Component List

This appendix describes components that constitute the crossbar box and the expanded connection rack.

Figure A-1 Locations of Components of the Crossbar Box

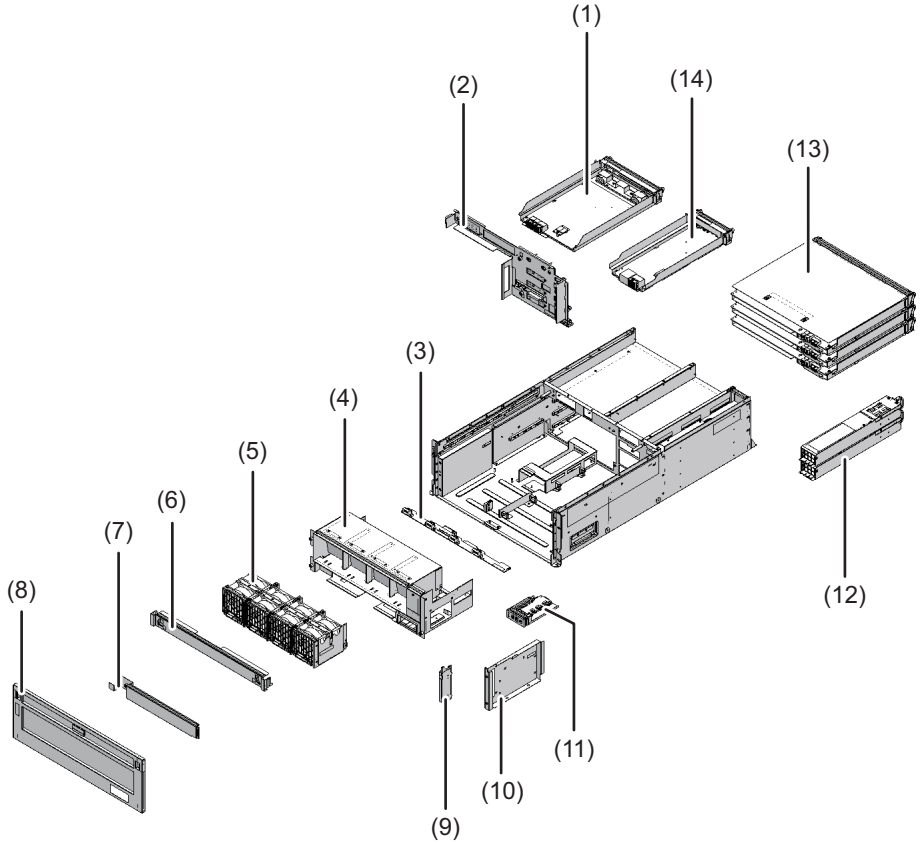

Location Number	Component
1	XSCF interface unit
2	Crossbar backplane unit
3	Fan backplane
4	Fan shelf
5	Fan unit
6	Upper cover
7	Lower cover
8	Front cover
9	Guide plate fixing bracket
10	Guide plate
11	Operation panel
12	Power supply unit
13	Crossbar unit
14	XSCF unit

Figure A-2 Locations of Components of the Expanded Connection Rack (SPARC M12-2S)

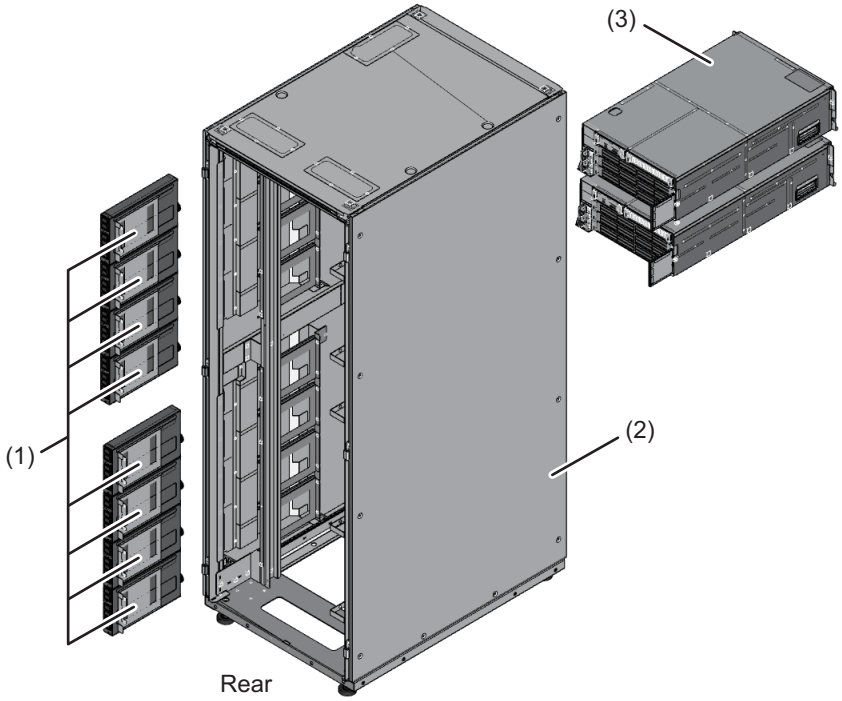

Figure A-3 Locations of Components of the Expanded Connection Rack (SPARC M10-4S)

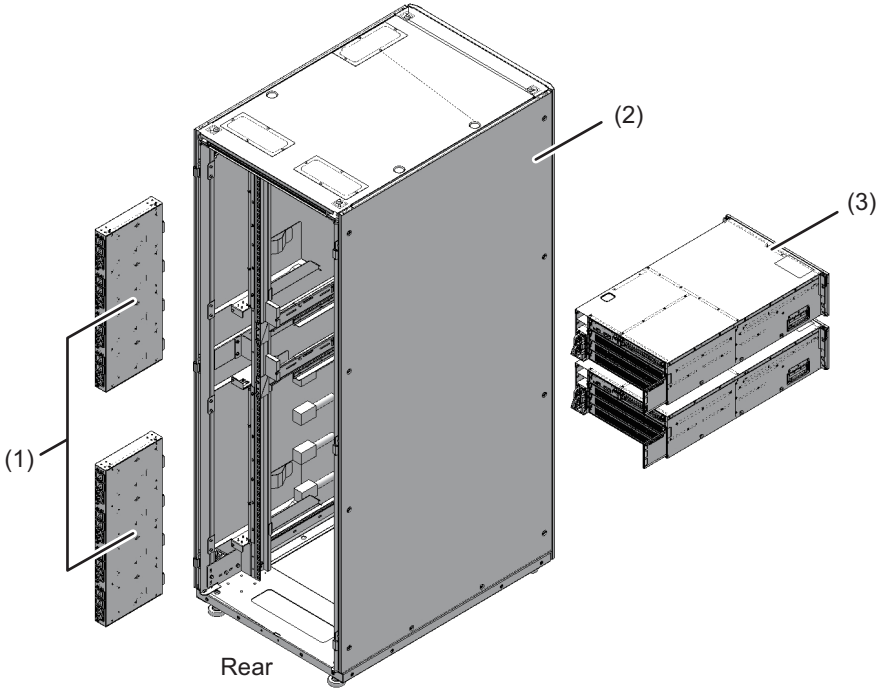

Location Number	Component
1	Dedicated power distribution unit
2	Expanded connection rack
3	Crossbar box

Appendix B

Component Specifications

This appendix provides the specifications of the components.
The components that constitute the crossbar box are as follows.

- Crossbar Unit
- XSCF Unit
- XSCF Interface Unit
- Power Supply Unit
- Fan Unit
- Various Backplanes
- Operation Panel

B.1 Crossbar Unit

The crossbar unit is a crossbar switch that logically connects an I/O unit with the CPU memory unit of a physical partition chassis. The crossbar unit has two operation modes: normal and degraded. Normal mode provides 2-way operation. Degraded mode provides 1-way operation, which is half of normal mode.
Table B-1 lists the specifications of the crossbar unit of the crossbar box.

Table B-1 Crossbar Unit Specifications

Item	Description
Number of crossbar units	3
Location	Rear of chassis
Type of maintenance	System-stopped/cold
Maintenance category	Replacement

For the maintenance procedure, see "Chapter 12 Maintaining the Crossbar Units."

B.2 XSCF Unit

The XSCF unit of the crossbar box is a control unit that is central to the system. The functions of an XSCF are as follows:

- Controlling each unit
- Console function for each physical partition that uses the TTY communication protocol
- Communication with each physical partition that uses a command interface
- Managing system information
- Browser-based user interface function
- Connection with a maintenance terminal
- Next remote chassis interface
- System power control and cluster control that use a remote power management function

Table B-2 lists the specifications of the XSCF unit of the crossbar box.

Table B-2 XSCF Unit Specifications

Item	Description
Number of XSCF units	1
Location	Rear of chassis
Type of maintenance	Active/Hot, inactive/hot, system-stopped/hot, and system-stopped/cold
Maintenance category	Replacement

For the maintenance procedure, see "Chapter 8 Maintaining the XSCF Unit."

B.3 XSCF Interface Unit

The XSCF interface unit of the crossbar box mounts the identification information. The XSCF interface unit and each of the other units are connected by the crossbar backplane unit.
Table B-3 lists the specifications of the XSCF interface unit of the crossbar box.

Table B-3 XSCF Interface Unit Specifications

Item	Description
Number of XSCF interface units	1
Location	Rear of chassis
Type of maintenance	System-stopped/cold
Maintenance category	Replacement

For the maintenance procedure, see "Chapter 14 Maintaining the XSCF Interface Unit."

B.4 Power Supply Unit

The power supply units of the crossbar box take power from the input power and supply it to the system. The redundant configuration of the power supply units allows the system to continue operating even if one of the units fails during operation. Table B-4 lists the specifications of the power supply unit of the crossbar box.

Table B-4 Power Supply Unit Specifications

Item	Description
Number of power supply units	2
Location	Rear of chassis
Type of maintenance	Active/Hot, inactive/hot, system-stopped/hot, and system-stopped/cold
Maintenance category	Replacement

For the maintenance procedure, see "Chapter 13 Maintaining the Power Supply Units."

B.5 Fan Unit

Four fan units are mounted on the crossbar box. They provide a flow of air to cool the inside of the chassis. Each fan unit has two cooling fans.
Table B-5 lists the specifications of the fan unit of the crossbar box.

Table B-5 Fan Unit Specifications

Item	Description
Number of fan units	4
Location	Front of chassis
Type of maintenance	Active/Hot, inactive/hot, system-stopped/hot, and system-stopped/cold
Maintenance category	Replacement

For the maintenance procedure, see "Chapter 15 Maintaining the Fan Units."

B.6 Various Backplanes

The backplane of the crossbar box is a unit with connectors for connecting replaceable units in the chassis.

The backplanes of the crossbar box are shown below.

- Crossbar backplane unit (A in Figure B-1)
- Fan backplane (B in Figure B-1)

Figure B-1 Locations of Backplanes of the Crossbar Box

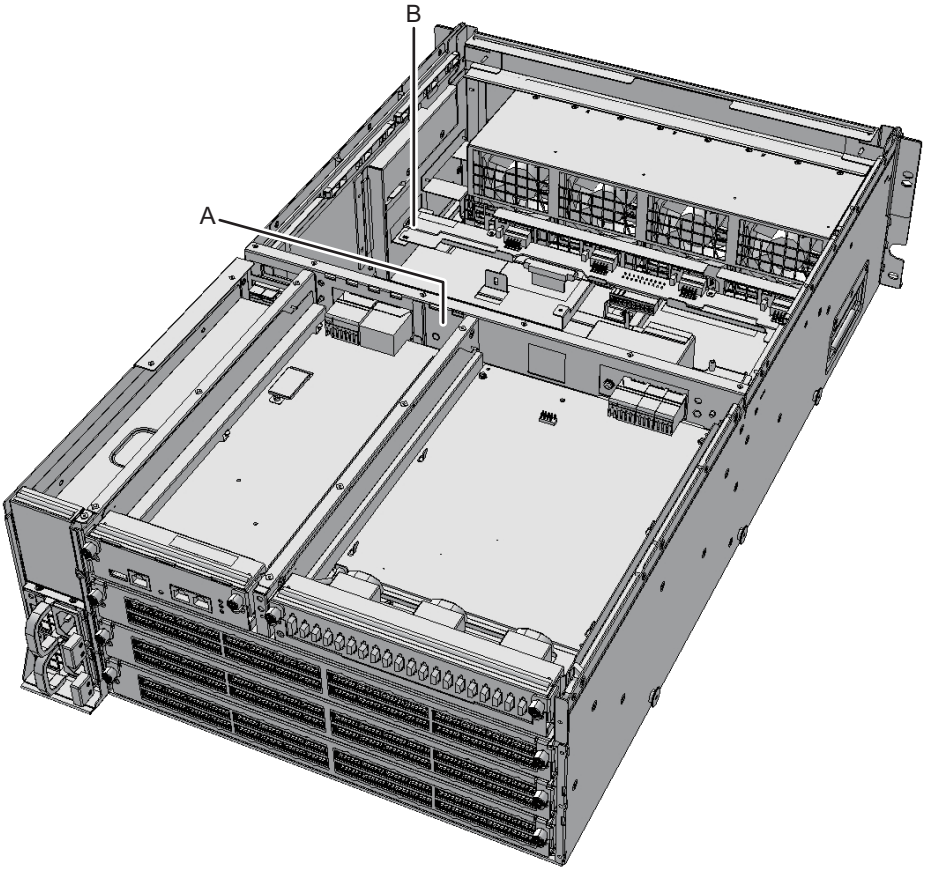

Table B-6 and Table B-7 list the specifications of the crossbar backplane and the fan backplane units, respectively.

Table B-6 Crossbar Backplane Unit Specifications

Item	Description
Number of crossbar backplane units	1
Location	Inside a chassis
Type of maintenance	System-stopped/cold
Maintenance category	Replacement

Table B-7 Fan Backplane Specifications

Item	Description
Number of fan backplanes	1
Location	Inside a chassis
Type of maintenance	System-stopped/cold
Maintenance category	Replacement

See the following chapters for details of the maintenance procedures:
Crossbar backplane unit of crossbar box: Chapter 19 Maintaining the Crossbar Backplane Unit
Fan backplane of crossbar box: Chapter 16 Maintaining the Fan Backplane

B.7 Operation Panel

The operation panel of the crossbar box is installed in the front of the chassis. This panel displays the system status and is used for operation.
Table B-8 lists the specifications of the operation panel of the crossbar box.

Table B-8 Operation Panel Specifications

Item	Description
Number of operation panels	1
Location	Front of chassis
Type of maintenance	System-stopped/cold
Maintenance category	Replacement

For the maintenance procedure, see "Chapter 17 Maintaining the Operation Panel."

Appendix C

External Interface Specifications

This appendix describes the specifications of the external interface connectors and the switch for the XSCF provided on the crossbar box.

The external interface connectors provided on the crossbar box are as follows.

- Serial Port
- USB Port

The switch for the XSCF provided on the crossbar box is as follows.

- RESET Switch

C.1 Serial Port

Table C-1 lists the specifications of the serial ports of the crossbar box.

Table C-1 Serial Port

Pin Arrangement	Pin Number	Signal Name	Input/Output	Description
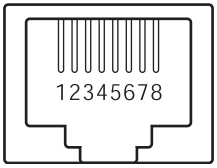	1	RTS	Output	Transmission request
	2	DTR	Output	Data terminal ready
	3	TXD	Output	Transmitted data
	4	GND	---	Ground
	5	GND	---	Ground
	6	RXD	Input	Received data
	7	DSR	Input	Data set ready
	8	CTS	Input	Transmission possible

C.1.1 Wire Connection Chart for a Serial Cable

Figure C-1 Wire Connection Chart for a Serial Cable

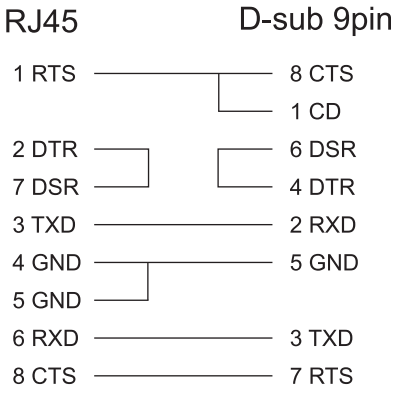

C.2 USB Port

Table C-2 lists the specifications of the USB ports of the crossbar box.

Table C-2 USB Port

Pin Arrangement	Pin Number	Signal Name	Input/Output	Description
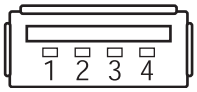	1	VBUS	Output	Power supply
	2	-DATA	Input/ Output	Data
	3	+DATA	Input/ Output	Data
	4	GND	---	Ground

C.3 RESET Switch

The RESET switch of the crossbar box is an emergency switch for rebooting the XSCF. For how to use the RESET switch, see "18.2 Precautions Concerning Using the RESET Switch" in the *Fujitsu SPARC M12 and Fujitsu M10/SPARC M10 System Operation and Administration Guide*.
The RESET switch (A in Figure C-2) is located on the rear of the chassis.

Figure C-2 Location of the RESET Switch

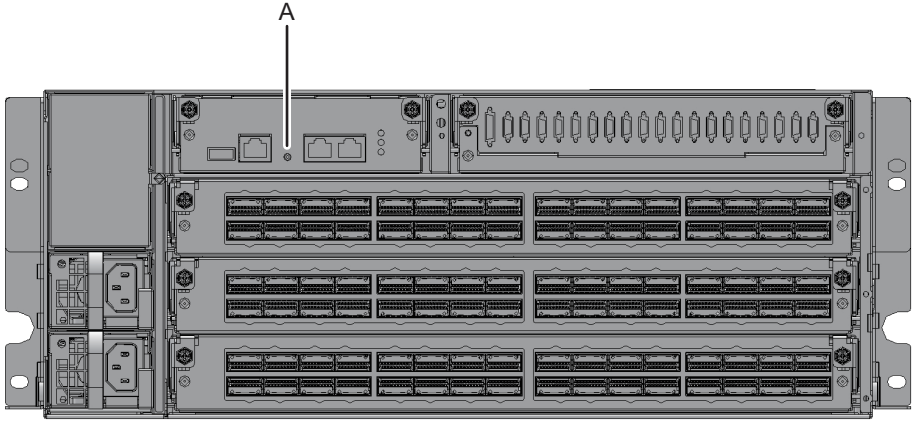

Appendix D

Removing the Lithium Battery

This appendix describes the procedure for removing the lithium battery mounted in the XSCF unit in the crossbar unit.

Note - Perform this work only when disassembling the product for disposal or recycling.

D.1 Location of the Lithium Battery

This section describes the location of the lithium battery.
One lithium battery is mounted in the XSCF unit in the crossbar box.
For details on removing the XSCF unit, see "8.4 Removing the XSCF Unit."

Figure D-1 Location of the Lithium Battery

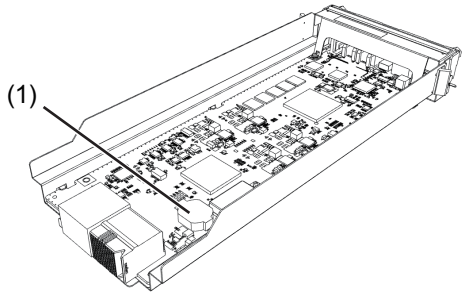

Location No.	Component
1	Lithium battery

D.2 Removing the Lithium Battery

This section describes the procedure for removing the lithium battery.

1. **Insert a flathead screwdriver or another fine-tipped tool between the lithium battery and battery holder, and pry the battery from the holder.**

Figure D-2 Removing the Lithium Battery (1)

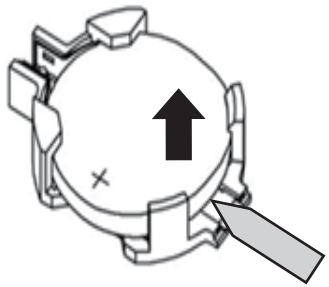

2. **Gripping the lithium battery with needle-nose pliers or another fine-tipped tool, pull the lithium battery out to remove it.**

Figure D-3 Removing the Lithium Battery (2)

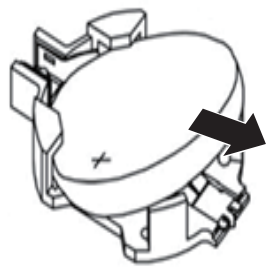

Index

S

T

U

X