FACTSHEET
SPREAD SPECTRUM CLOCK GENERATORS

FUJITSU

THE POSSIBILITIES ARE INFINITE

Spread Spectrum Clock Generators

EMI reduction the easy way

Description

Meeting the strict requirements of EMI regulations like CISPR is getting more and more difficult with highly integrated and high speed systems. Such systems radiate much EMI noise at the main operation clock frequency and its harmonics, resulting in high peaks in the frequency spectrum. Developers have to spend much effort to design standard conform systems in a conventional way. Furthermore, devices become more expensive and bigger if hardware counter-measures are required like bypass capacitors, choke coils, ferrites or shielding. Fujitsu's Spread Spectrum Oscillators spread the radiated energy to a wider frequency band, thus reducing the peaknoise. EMI improvement of up to -19dB is possible without further measures.

Benefits

- Reduction of peaks in the radiated frequency spectrum of up to -19dB
- Reduced cost (no choke coils, shielding, ferrite or noise filters)
- Smaller systems
- Less development and verification effort

Principle

In contrast to conventional analogue modulation, Fujitsu's digital approach, using a current D/A converter, achieves an accurate frequency modulation with reduced cycle-cycle jitter and an homogeneous spread spectrum. No disturbances like distortion occur in the modulated waveform.

A complex multi-cycle modulation waveform further increases the performance of Fujitsu's spread spectrum clock generators. This modulation waveform prevents peaks at the modulation interval, which occur in common single cycle modulators. The repetition rate is device and configuration dependent. For example it may sweep between 2000 and 2600 input clock periods.

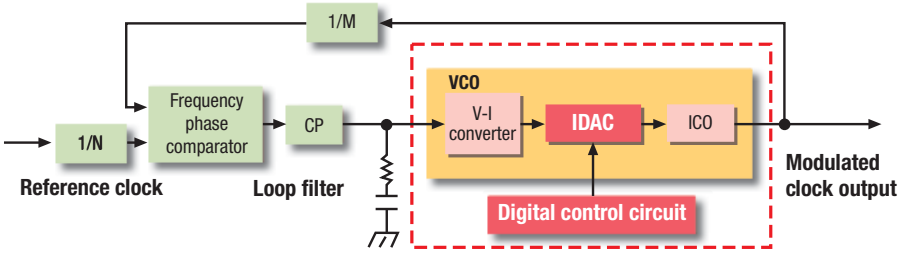

Figure 1. Block diagram SSCG.

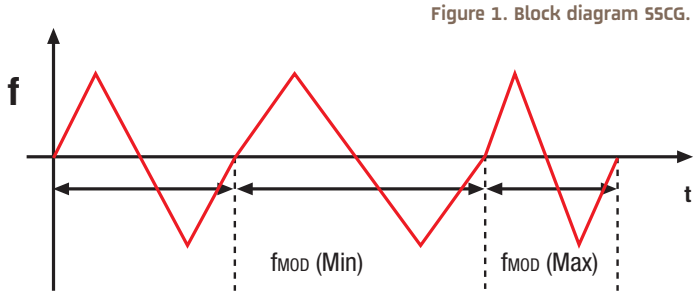

Figure 2. Complex modulation waveform.

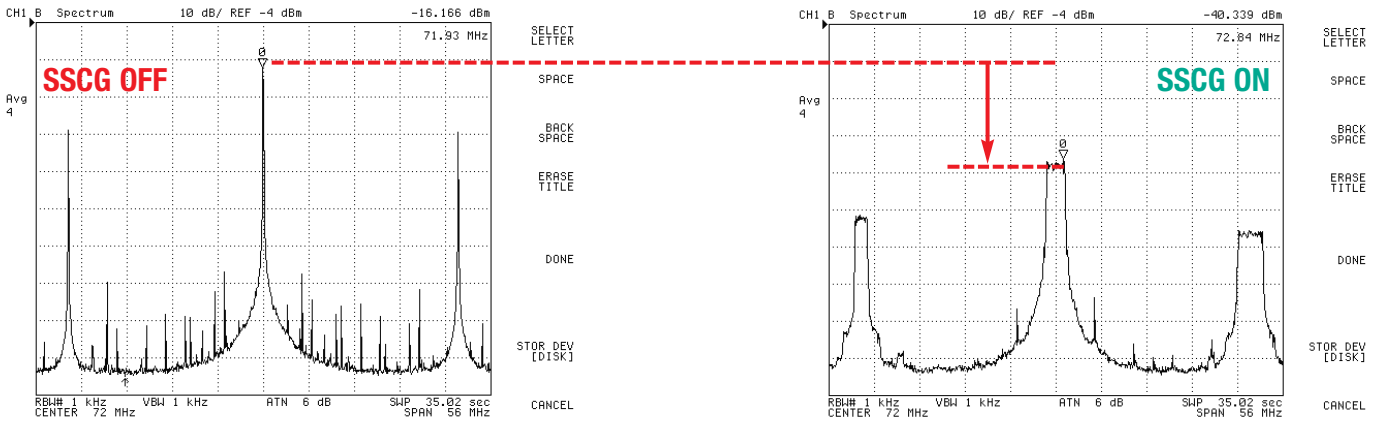

Figure3. EMI reduction by spread spectrum clock generation.

FACTSHEET

SPREAD SPECTRUM CLOCK GENERATORS

FUJITSU

THE POSSIBILITIES ARE INFINITE

Lineup

A broad portfolio of SSCG devices covers a wide range of applications

- Single and multiple output devices with up to 8 channels
- Different packages, SSOP, BCC, TSSOP
- 3.3V and 1.8V devices
- Low power consumption
- Power-down modes
- Wide output frequency range: 8MHz to 168MHz (depending on device)
- Wide input frequency range: 8MHz to 80MHz (depending on device)
- Industrial temperature range -40 to +85°C

Evaluation Boards

Evaluation boards for each SSCG product are available to allow easy testing and validation.

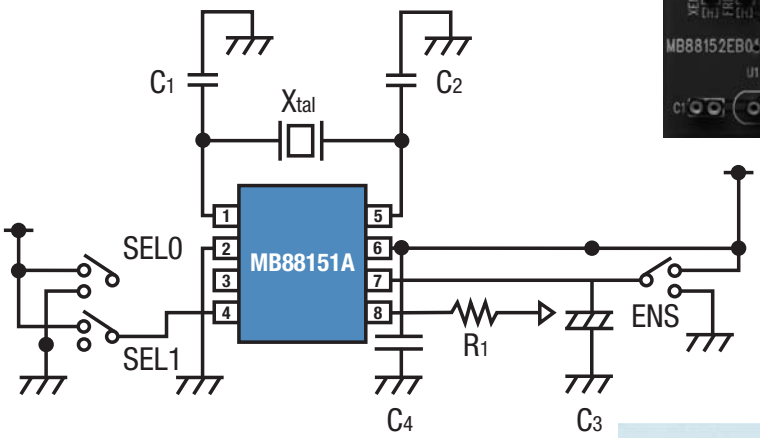

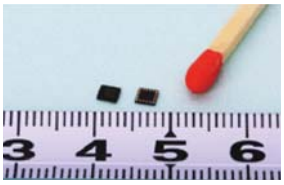

MB88161

Products	Output frequency (20 40 60 80 100 120 140 160)	Modulation degree	REF	Package Type	Package Body-size	Remarks
MB88151A	8.3~133.4MHz	±0.5% ±1.5% -1.0% -3.0%	No	SOP8	W: 3.9mm L: 5.05mm H: 1.75mm	3.3V±0.3V *Only for MB88154A ±1.0%, -2.0% modulation
MB88152A	16.6~134MHz					
MB88153A	16.6~134MHz					
MB88154A*	16.6~80MHz		Yes			
MB88155	12.5~50MHz	±0.5% ±1.0% -1.0% -2.0%	Yes	TSSOP8	W: 4.4mm L: 3.0mm H: 1.2mm	3.3V±0.3V
MB88156	12.5~80MHz		Yes	BCC16	W: 2.5mm L: 3.5mm H: 0.8mm	3.3V±0.3V
MB88161	20~80MHz	±0.5% ±1.0% ±2.0% -1.0% -2.0% -4.0%	No	BCC18	W: 2.7mm L: 2.4mm H: 0.5mm	3.3V±0.3V
MB88162	10~28 80~166MHz					
MB88163	12.5~168MHz	±0.25% ±0.5% ±1.0%	No	TSSOP8	W: 4.4mm L: 3.0mm H: 1.2mm	1.8V±0.15V
MB88181	8~166MHz	±0.5% ±1.0% ±1.5% ±2.0%	Yes	TSSOP20	W: 4.4mm L: 6.5mm H: 0.98mm	3.3V±0.3V 8 output

ASK FUJITSU MICROELECTRONICS EUROPE

Contact us on +49(0) 61 03 69 00 or visit http://emea.fujitsu.com/microelectronics