Fujitsu M10-1/SPARC M10-1

Service Manual

Manual Code: C120-E681-16EN
December 2018

Contents

Preface

This document describes the maintenance procedures for the Oracle or Fujitsu SPARC M10-1. The maintenance work should be performed by service engineers and/or field engineers.

Fujitsu M10 is sold as SPARC M10 by Fujitsu in Japan.
Fujitsu M10 and SPARC M10 are identical products.

Audience

This document is intended for service engineers and field engineers who perform maintenance work on the system.

Related Documentation

All documents for your server are available online at the following locations.

- Sun Oracle software-related documents (Oracle Solaris, etc.)
  http://docs.oracle.com/en/
- Fujitsu documents
  Global site

  http://www.fujitsu.com/global/products/computing/servers/unix/sparc/downloads/manuals/

  Japanese site

  http://www.fujitsu.com/jp/products/computing/servers/unix/sparc/downloads/manual/

The following table lists documents related to SPARC M10 Systems.

Documentation Related to the SPARC M10

Manual Names (*1)
Fujitsu M10/SPARC M10 Systems Product Notes
Fujitsu M10/SPARC M10 Systems Getting Started Guide (*2)
Fujitsu M10/SPARC M10 Systems Quick Guide
Fujitsu SPARC M12 and Fujitsu M10/SPARC M10 Important Legal and Safety Information (*2)
Fujitsu SPARC M12 and Fujitsu M10/SPARC M10 Safety and Compliance Guide
Fujitsu SPARC M12 and Fujitsu M10/SPARC M10 Security Guide
Software License Conditions for Fujitsu SPARC M12 and Fujitsu M10/SPARC M10
Fujitsu SPARC Servers/SPARC Enterprise/PRIMEQUEST Common Installation Planning Manual
Fujitsu M10-1/SPARC M10-1 Installation Guide
Fujitsu M10-4/SPARC M10-4 Installation Guide
Fujitsu M10-4S/SPARC M10-4S Installation Guide
Fujitsu SPARC M12 and Fujitsu M10/SPARC M10 System Operation and Administration Guide
Fujitsu SPARC M12 and Fujitsu M10/SPARC M10 Domain Configuration Guide
Fujitsu M10-1/SPARC M10-1 Service Manual
Fujitsu M10-4/Fujitsu M10-4S/SPARC M10-4/SPARC M10-4S Service Manual
Crossbar Box for Fujitsu SPARC M12 and Fujitsu M10/SPARC M10 Service Manual
PCI Expansion Unit for Fujitsu SPARC M12 and Fujitsu M10/SPARC M10 Service Manual
Fujitsu M10/SPARC M10 Systems PCI Card Installation Guide
Fujitsu SPARC M12 and Fujitsu M10/SPARC M10 XSCF Reference Manual
Fujitsu SPARC M12 and Fujitsu M10/SPARC M10 RCIL User Guide (*3)
Fujitsu SPARC M12 and Fujitsu M10/SPARC M10 XSCF MIB and Trap Lists
Fujitsu SPARC M12 and Fujitsu M10/SPARC M10 Glossary
External USB-DVD Drive user guide

*1 The listed manuals are subject to change without notice.
*2 Printed manuals are provided with the product.
*3 This document applies specifically to the SPARC M12/M10 and FUJITSU ETERNUS disk storage system.

Notes on Safety

Read the following documents thoroughly before using or handling the SPARC M10 Systems.

- *Fujitsu SPARC M12 and Fujitsu M10/SPARC M10 Important Legal and Safety Information*

- *Fujitsu SPARC M12 and Fujitsu M10/SPARC M10 Safety and Compliance Guide*

Text Conventions

This manual uses the following fonts and symbols to express specific types of information.

Font/Symbol	Meaning	Example
AaBbCc123	What you type, when contrasted with on-screen computer output. This font is used to indicate an example of command input.	`XSCF>` **`adduser jsmith`**

`AaBbCc123`	The names of commands, files, and directories; on-screen computer output.
	This font is used to indicate an example of command output in the frame.
		`XSCF>` **`showuser -P`**
		`User Name:  jsmith`
		`Privileges:  useradm`
		`  auditadm`

Italic	Indicates the name of a reference manual.	See the *Fujitsu M10-1/SPARC M10-1 Installation Guide*.
" "	Indicates the names of chapters, sections, items, buttons, or menus.	See "Chapter 2 Network Connection."

Command Syntax in the Text

While the XSCF commands have a section number of (8) or (1), it is omitted from the text.
For details on the commands, see the *Fujitsu SPARC M12 and Fujitsu M10/SPARC M10 XSCF Reference Manual*.

Syntax of the Command-Line Interface (CLI)

The command syntax is as follows:

- A variable that requires the input of a value is in Italics.
- An optional element is enclosed in [].
- A group of options for an optional keyword is enclosed in [] and delimited by |.

Document Feedback

If you have any comments or requests regarding this document, please take a moment to share them with us. Along with the manual code, manual title, and page number, state your points specifically at one of the following websites:

- Global site
  http://www.fujitsu.com/global/contact/
- Japanese site
  http://www.fujitsu.com/jp/products/computing/servers/unix/sparc/contact/

Chapter 1

Before Starting Maintenance Work

This chapter describes the safety precautions that must be observed before starting any maintenance work.
Note the meanings of each of the following symbols and labels to ensure that the work is done correctly.

- Warning/Caution Indications
- Labels/Tags
- Safety Precautions
- Precautions on Static Electricity
- Other Precautions
- Emergency Power Off

1.1 Warning/Caution Indications

This manual uses the following conventions to indicate warning and alert messages, which are intended to prevent injury to the user and others as well as damage to property.

Warning - "WARNING" indicates a potential hazard that could result in death or serious personal injury if the user does not perform the procedure correctly.

Caution - "CAUTION" indicates a potential hazard that could result in minor or moderate personal injury if the user does not perform the procedure correctly. This also indicates that damage to the unit itself or other property may occur if the user does not perform the procedure correctly.

1.2 Labels/Tags

This section describes the labels and tags attached to the chassis.
Observe the precautions of the standard labels attached to the chassis when performing maintenance.

Caution - Do not remove the labels or tags.

Note - The contents of the labels and tags described here may differ from those that are actually affixed to the chassis.

- The system name plate label (A in Figure 1-1) describes the model number, serial number, manufacture date, rated voltage/current, number of phases, frequency, and weight required for maintenance and management.
- The standard label (B in Figure 1-1) describes the following certification standards.
  - Safety: NRTL/C, BIS
  - Radio wave: VCCI-A, FCC-A, ICES, KCC, and ICT
  - Safety and radio wave: CE, CCC, BSMI, RCM, and EAC

Figure 1-1 Location of the system name plate label and standard label

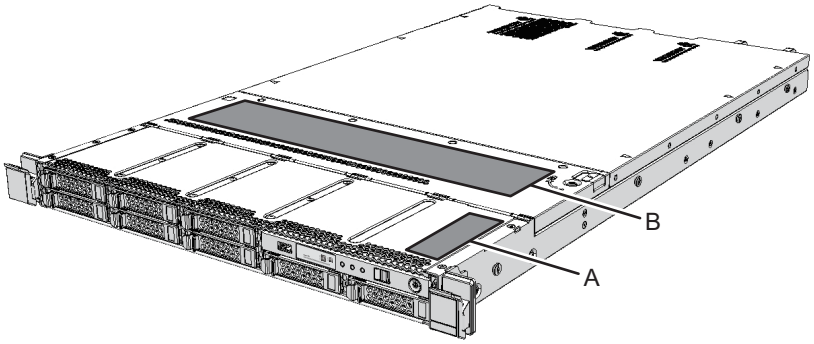

- The RFID tag carries an Asset ID. The RFID tag is affixed to the operation panel.

Figure 1-2 RFID tag

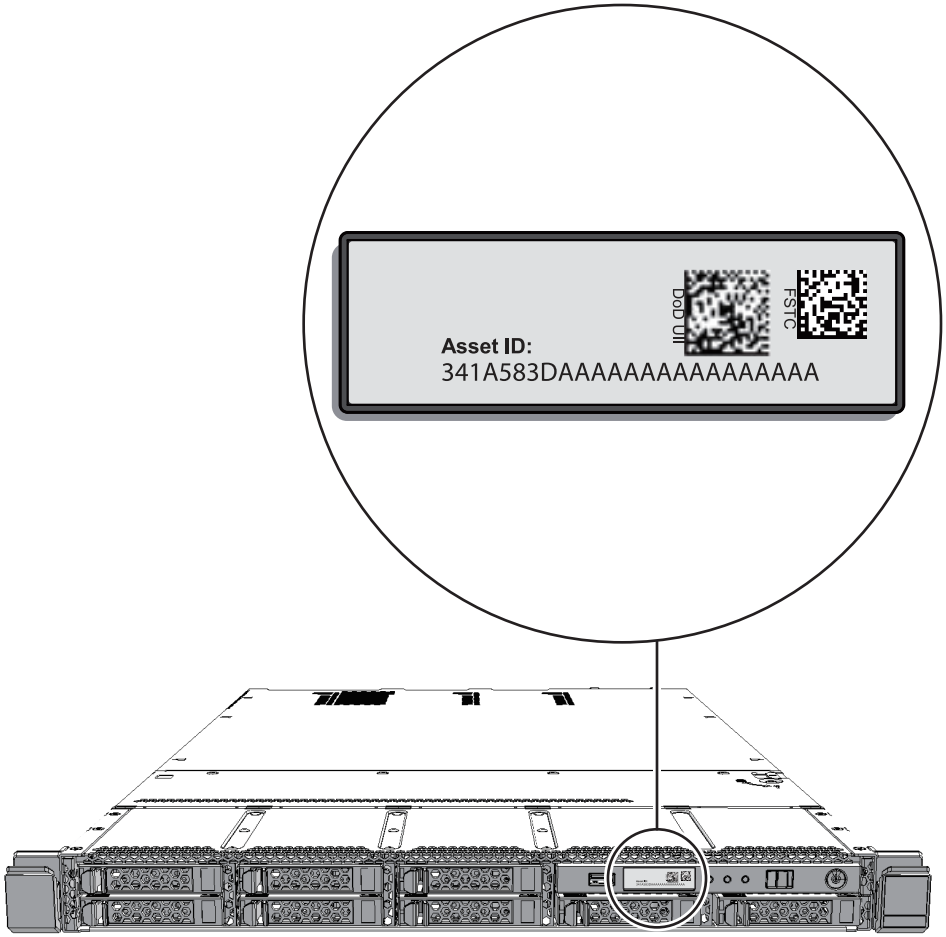

1.3 Safety Precautions

Observe the following precautions to protect yourself when performing maintenance.

- Observe all the precautions, warnings, and instructions described on the chassis.
- Do not insert foreign objects into the openings in the chassis. Any such foreign object could come into contact with high-voltage circuitry or could short circuit the components, causing a fire or an electric shock.
- Contact a service engineer to inspect the chassis.

Safety precautions on electricity

- Confirm that the voltage and frequency of your input power supply match the electric rating described on the system name plate label affixed on the chassis.
- Wear a wrist strap when handling an internal disk, a mother board unit, or other printed boards.
- Use grounded power outlets.
- Do not attempt to make any mechanical or electrical modifications. Fujitsu shall not be responsible for the regulatory compliance of a chassis that has been modified.

Rack-related safety precautions

- The racks should be fixed on the floor, ceiling, or the adjacent frame.
- The racks may be supplied with a quakeresistant options kit. The use of the quakeresistant options kit prevents the racks from falling over when sliding a chassis out on a slide rail, either for installation or maintenance.
- Prior to installation or maintenance, a safety assessment should be conducted by a service engineer in the following cases:
  - When the quakeresistant options kit is not supplied and the rack is not fixed to the floor with bolts: Confirm safety by checking whether the rack could fall over, etc. when a chassis is pulled out on the slide rail.
  - When the rack is to be installed on a raised floor: Check that the raised floor can bear the load when a chassis is pulled out on the slide rail.
- If the chassis is mounted at the 20U level or higher, use a step ladder.
- If multiple chassis are mounted in a rack, perform maintenance for each of the chassis.

For details on the rack, see "Chapter 2 Planning and Preparing for System Installation" in the *Fujitsu M10-1/SPARC M10-1 Installation Guide*.

1.4 Precautions on Static Electricity

Observe the precautions related to electrostatic discharge (ESD) as described in Table 1-1 to ensure the safety of personnel and the system.

Table 1-1 ESD precautions

Item	Precaution
Wrist strap	Wear an antistatic wrist strap when handling printed boards.
ESD mat	An approved ESD mat provides protection from static damage when used with a wrist strap. The mat also acts as a cushion to protect the small parts that are attached to printed boards.

Table 1-1 ESD precautions *(continued)*

Item	Precaution
Antistatic bag/ ESD safe packaging box	After removing a printed board or component, place it in the antistatic bag or ESD safe packaging box.

How to use a wrist strap

Wear a wrist strap in such a way that the inner metal surface (A in Figure 1-3) of the wrist strap band is in contact with your skin. Connect the clip (B in Figure 1-3) directly to the chassis.

Caution - Do not connect the wrist strap clip to the ESD mat. By connecting the wrist strap clip to the chassis, the operator and components have the same electrical potential, thus eliminating the danger of static damage.

Figure 1-3 Wrist strap connection destination

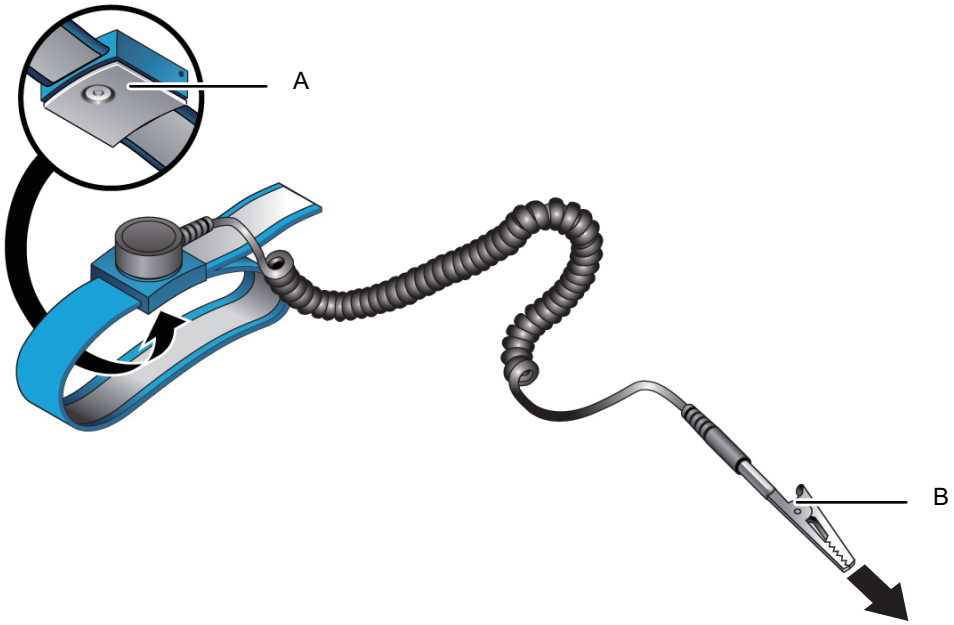

1.5 Other Precautions

- The printed boards in a chassis can be easily damaged by static electricity. To prevent damage to printed boards, wear a wrist strap and connect it to the chassis

prior to starting maintenance.

- If excessive force is applied to the motherboard unit, the components mounted on the printed boards could be damaged. When handling the motherboard unit, observe the following precautions:
  - Handle the motherboard unit by holding it by the handle.
  - When removing the motherboard unit from its packaging, keep the motherboard unit horizontal until you lay it on the cushioned ESD mat.
  - Connectors and components on the motherboard unit have thin pins that bend easily. Therefore, do not place the motherboard unit on a hard surface.
  - Be careful not to damage the small parts mounted on both sides of the motherboard unit.
- The heat sinks can be damaged by incorrect handling. Do not touch the heat sinks with your hands or other objects while replacing or removing motherboard units. If a heat sink becomes disconnected or is broken, obtain a replacement motherboard unit. When storing or carrying a motherboard unit, ensure that the heat sinks are sufficiently protected.
- When removing a cable such as the LAN cable, if you cannot reach the latch lock of the connector, use a flat headed screwdriver to push the latch and release the cable. If you use force to remove the cable, the LAN port of the motherboard unit or a PCI Express (PCIe) card may be damaged.
- Do not use any power cords other than those specified.
- Check the appearance of the products before starting work. When unpacking them, confirm that no unit is deformed, no connector is damaged, and there are no other such defects.
  Do not mount the products that have a defect in the appearance. Mounting a product that has a defect in appearance may damage the SPARC M10-1.

1.6 Emergency Power Off

This section describes the procedure for powering off the system in an emergency.

Caution - In an emergency (such as smoke or flames coming from the chassis), immediately stop using the unit and turn off the power supply. Regardless of the operation you are performing, give top priority to fire prevention.

1. **Remove all the power cords from the power supply units.**
   For details, see "5.8.1 Removing the power cords."

Figure 1-4 Removing the power cords

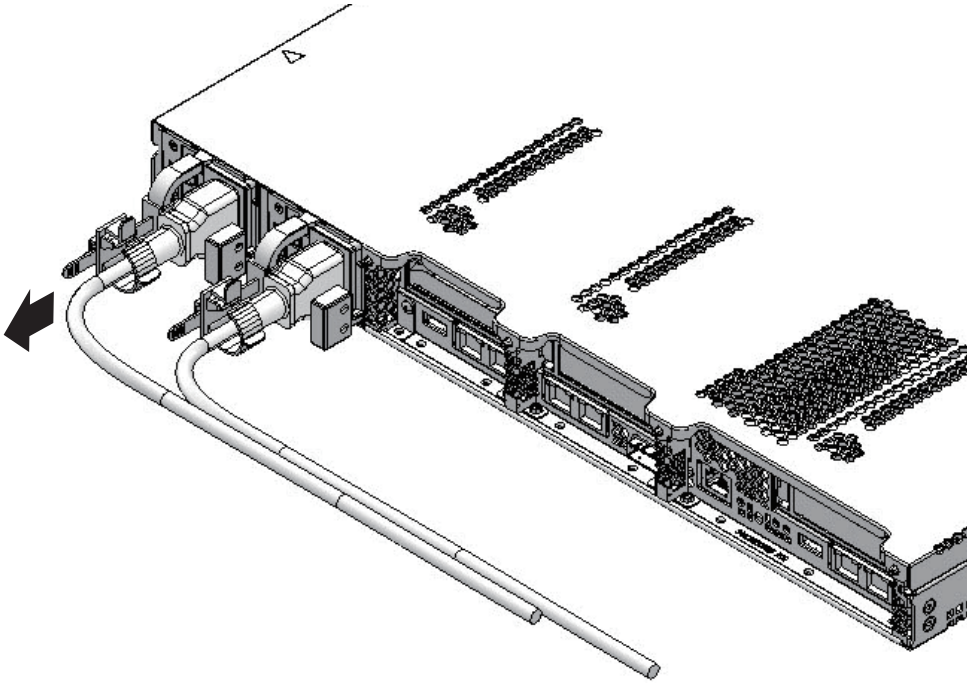

Chapter 2

Understanding the System Components

This section describes the components mounted on the SPARC M10-1.
It is necessary to confirm and fully understand the configurations of the components mounted in the chassis as well as the LED indications before starting any maintenance work.

- Identifying the Names and Locations of Components
- Checking the Memory Configuration Rules
- Confirming the Functions of the Operation Panel
- Checking the LED Indications

For the specifications of each component, see "Appendix B Component Specifications."

2.1 Identifying the Names and Locations of Components

This section describes the names and locations of the components mounted on the SPARC M10-1.

Components that can be accessed from the front

Figure 2-1 Locations of components that can be accessed from the front

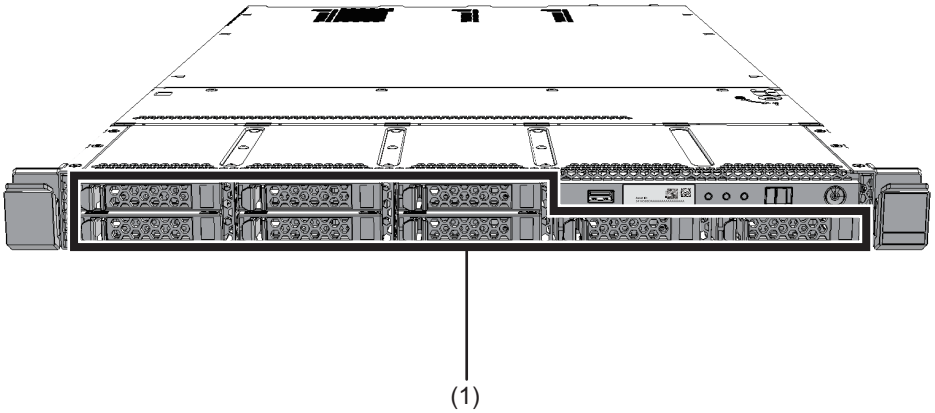

Location number	Component
1	Internal disk

Components that can be accessed from the rear

Figure 2-2 Locations of components that can be accessed from the rear

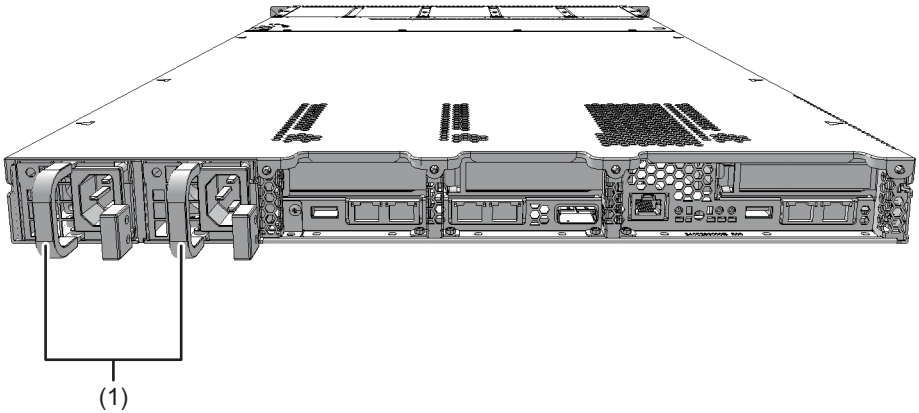

Location number	Component
1	Power supply unit

Internal components

To access the internal components, open the fan cover and remove the upper cover. For details on how to remove the covers, see "5.8.4 Opening the fan cover" or "5.8.5 Removing the upper cover."

Figure 2-3 Locations of internal components

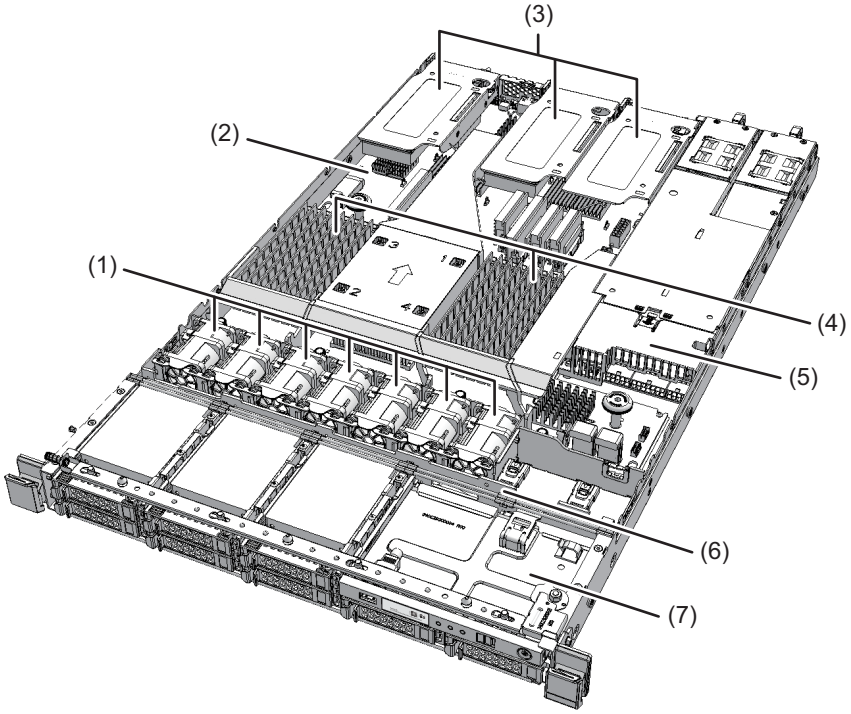

Location number	Component
1	Fan unit
2	Motherboard unit
3	PCI Express (PCIe) card
4	Memory
5	PSU backplane
6	HDD backplane
7	Operation panel

2.2 Checking the Memory Configuration Rules

This section describes the memory installation rules and the method for checking memory information.

2.2.1 Memory installation rules

Install the memory in accordance with the following rules:

- Install memory in units of four or eight modules.
- When memory is installed in units of four or eight modules, install the memory modules of the same capacity and rank.
- Use either R-DIMM (Registered DIMM: 8 GB/16 GB/32 GB) memory or LR-DIMM (Load Reduced DIMM: 64 GB) memory.
- For memory mirroring, install 8 or 16 memory modules and install the memory modules of the same capacity and rank for memory groups A and B.
- You can install memory modules of different capacities.
  However, when a 256 GB memory module (64 GB DIMM x 4) is installed, memory modules of other capacities cannot be installed together with it. Be sure to use only 256 GB memory modules (64 GB DIMM x 4).
- Install memory for group A first, then install memory for group B.

Figure 2-4 shows all memory installation locations. Groups a to d indicate 4-module memory installation units. Table 2-1 and Table 2-2 list the supported memory installation configurations. Memory for group B cannot be installed until no more memory can be installed for group A.
As for the installation order of memory modules for memory group B, give priority to using either all R-DIMM or all LR-DIMM memory rather than installing them according to the memory installation configurations shown in Table 2-1 and Table 2-2.

When configuring memory mirroring, install all the memory in group A or group B. A combination of mirrored memory is a unit of eight modules as shown in Table 2-4. For example, in the memory on the right side of CPU#0 in Figure 2-4, the four-module set of MEM#00B, MEM#00A, MEM#01B, and MEM#01A mirrors the four-module set of MEM#10B, MEM#10A, MEM#11B, and MEM#11A.

Figure 2-4 Memory installation locations and units

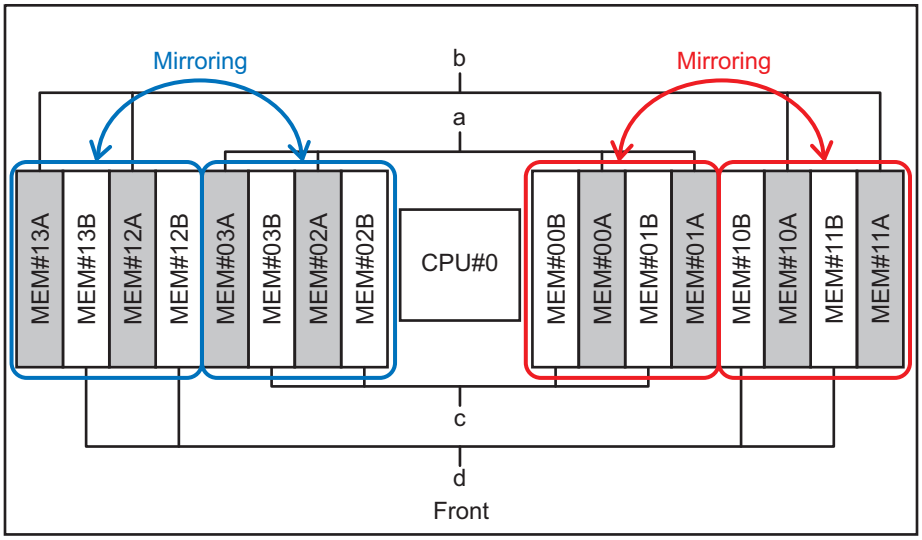

Table 2-1 Memory installation configurations (4-module units)

Memory module count	Memory installed			
4	a in Figure 2-4	-	-	-
8	a in Figure 2-4	b in Figure 2-4	-	-
12	a in Figure 2-4	b in Figure 2-4	c in Figure 2-4	-
16	a in Figure 2-4	b in Figure 2-4	c in Figure 2-4	d in Figure 2-4

Table 2-2 Memory installation configurations (8-module units)

Memory module count	Memory installed			
8	a in Figure 2-4	b in Figure 2-4	-	-
16	a in Figure 2-4	b in Figure 2-4	c in Figure 2-4	d in Figure 2-4

2.2.2 Checking memory information

Check the type and size of the memory by using the showhardconf command of the XSCF firmware.

1. **Log in to the XSCF shell.**
2. **Execute the showhardconf command to check the memory information.**
   The capacity and rank of the memory are displayed.

```
XSCF> showhardconf
-----------------------Omitted-----------------------
    MBU Status:Normal; Ver:2086h; Serial:TZ1249M00C  ;
        + FRU-Part-Number:CA07363-D001 A0   /7060744              ;
        + Power_Supply_System: ;
        + Memory_Size:64 GB; Type: A ;
        CPU#0 Status:Normal; Ver:4142h; Serial:00325040;
            + Freq:2.800 GHz; Type:0x10;
            + Core:16; Strand:2;
        MEM#00A Status:Normal;
            + Code:2c800118KSF1G72PZ-1G6E1 4531-B1F92ED5;
            + Type:04; Size:8 GB;
        MEM#01A Status:Normal;
            + Code:2c800118KSF1G72PZ-1G6E1 4531-B1F92F0B;
            + Type:04; Size:8 GB;
        MEM#02A Status:Normal;
            + Code:2c800118KSF1G72PZ-1G6E1 4531-1A947388;
            + Type:04; Size:8 GB;
        MEM#03A Status:Normal;
            + Code:2c800118KSF1G72PZ-1G6E1 4531-1A947375;
            + Type:04; Size:8 GB;
```

Figure 2-5 How to read the memory information

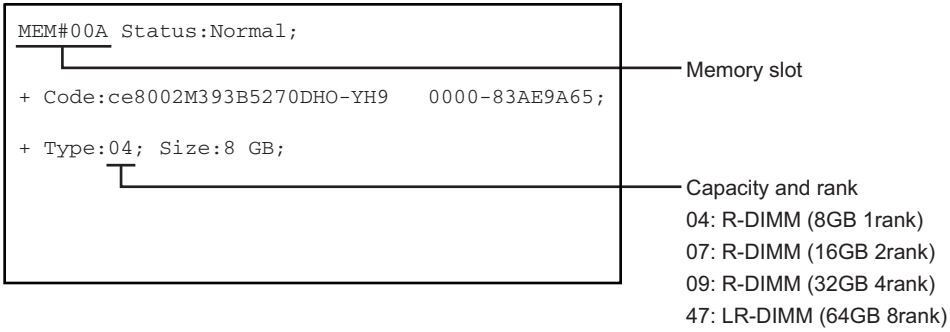

2.3 Confirming the Functions of the Operation Panel

This section describes the functions of the operation panel.
The operation panel provides the system's display and control functions. The field engineer and system administrator can specify the operation mode or control start/stop of the system while checking the LEDs indicating the system operation status.

Figure 2-6 Location of the operation panel

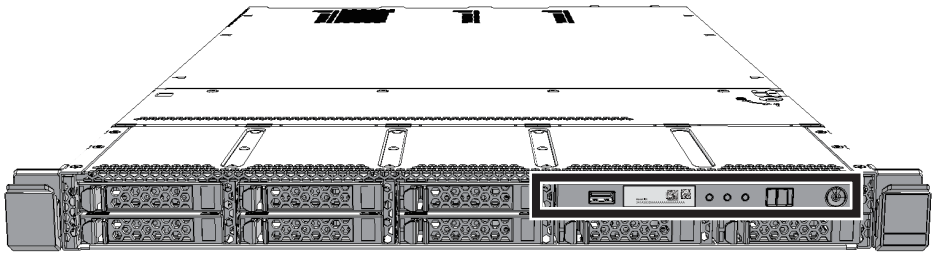

Figure 2-7 Appearance of operation panel

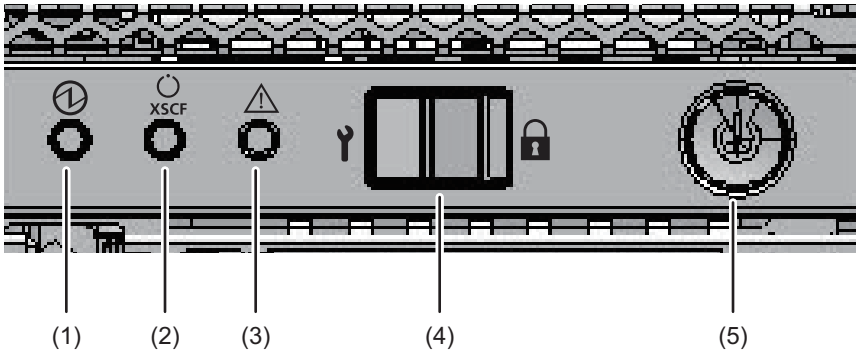

Location number	LED/switch
1	POWER LED
2	XSCF STANDBY LED
3	CHECK LED
4	Mode switch
5	Power switch

2.3.1 Display function of the operation panel

The operation panel has three LED indicators as a display function. The LED indicators indicate the following. For details, see "2.4.1 Operation panel LEDs."

- General system status
- System error warning
- System error location

Figure 2-8 Operation panel LEDs

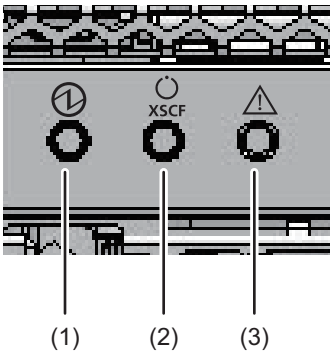

Location number	LED
1	POWER LED
2	XSCF STANDBY LED
3	CHECK LED

2.3.2 Control function of the operation panel

The operation panel has the following switches to implement its control function:

- Mode switch (slide switch)
  Specifies the operation or maintenance mode.
- Power switch
  Controls start/stop of the system.

Figure 2-9 Operation panel switches

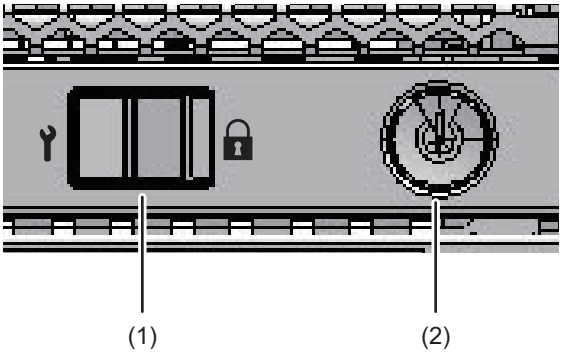

Location number	Switch
1	Mode switch
2	Power switch

The mode switch sets the operation mode for the system. The Locked and Service operation modes can be switched by sliding the mode switch.
Table 2-3 describes the difference between the modes.

Table 2-3 Functions of the mode switch

Icon	Name	Description
	Locked mode	Mode used for normal operation - The power switch can be used to start the system but not to stop it.
	Service mode	Mode used for maintenance - The power switch cannot be used to start the system but can be used to stop it. - Place the system in Service mode to perform maintenance work with the system stopped.

Use the power switch to start or stop the system. The system starts/stops differently depending on how the power switch is pressed.
Table 2-4 describes how system starts/stops vary depending on how the power switch is pressed.

Table 2-4 Functions of the power switch

Icon	Operation	Description	
	Brief press (For 1 second or more and less than 4 seconds)	If the system has been started in Service mode:	Operation is ignored.
		If the system is stopped in Service mode:	Operation is ignored.
		If the system has been started in Locked mode:	Operation is ignored.
		If the system is stopped in Locked mode:	Starts the system. At this time, if a wait time for the air conditioning facilities or a warm-up time is set on the XSCF, the processing for waiting for the power-on of the air conditioning facilities and the completion of warm-up is omitted.
	Long press (For 4 seconds or more)	If the system has been started in Service mode:	Perform the system shutdown process to stop the system.
		If the system startup process is in progress in Service mode:	Cancels the system startup process and stops the system.

Table 2-4 Functions of the power switch *(continued)*

Icon	Operation	Description	
		If the system stop process is in progress in Service mode:	Continues the system stop process.
		If the system is stopped in Service mode:	Operation is ignored. Even a long press does not start the system.
		If the system is stopped in Locked mode:	Starts the system. If a wait time for the air conditioning facilities or a warm-up time is set on the XSCF, the processing for waiting for the power-on of the air conditioning facilities and the completion of warm-up is omitted.
		If the system is not stopped in Locked mode:	Operation is ignored.

Table 2-5 describes the functions of the mode switch.

Table 2-5 Functions of the mode switch

Function	Mode switch	
	Locked	Service
Start/stop of the system by the power switch	Only system startup is enabled.	A long press powers off the system.
Inhibition of break signal reception	Enabled. Using the setpparmode command, you can specify whether to receive break signals or inhibit their reception for each physical partition.	Disabled

2.4 Checking the LED Indications

This section describes the indications given by the system LEDs.
LEDs are mounted on the operation panel on the front of the chassis, on the rear panel of the chassis, and on each component that can be maintained. If an error occurs, the LED indication enables you to determine the system that requires maintenance.

2.4.1 Operation panel LEDs

The three LEDs on the operation panel indicate the operation status of the entire system. In addition, the LEDs enable you to check the system status by their

combination of being on, blinking, or off. For the locations of the LEDs, see Figure 2-8.

Table 2-6 lists the system operation status indicated by the LEDs, while Table 2-7 lists the system status indicated by the combination of LEDs.

Table 2-6 System operation status indicated by LEDs

Icon	Name	Color	State	Description
	POWER	Green	On	System is started.
			Blinking	System is being stopped.
			Off	System is stopped.
XSCF	XSCF STANDBY	Green	On	The XSCF is functioning normally.
			Blinking	The XSCF is being initialized.
			Off	The XSCF is stopped.
	CHECK	Amber	On	Hardware has detected an error.
			Blinking	Chassis specified at execution of the XSCF command instructing the blinking. This (locator) is used to identify the location of the chassis requiring maintenance.
			Off	Normal state, or the power is disconnected or otherwise not being supplied.

Table 2-7 System status indicated by combination of LEDs

LED state			Description
POWER	XSCF STANDBY	CHECK	
	XSCF		
Off	Off	Off	Power is disconnected.
Off	Off	On	The XSCF has detected an error before system start or after system stop.
Off	Blinking	Off	The XSCF is being initialized.
Off	On	Off	The XSCF is in the standby state. The system is waiting for power-on of the air conditioning facilities (in the data center).
On	On	Off	Warm-up standby processing is in progress. After the end of this processing, the system starts up. System startup processing is in progress. The system is operating.
On	On	On	Although the system is operating normally, an error has been detected.
Blinking	On	Off	System stop processing is in progress. After the end of processing, the fan unit stops.

2.4.2 LEDs on the rear panel (System locator)

The field engineer or system administrator can identify the chassis requiring maintenance by noting the CHECK LED (A in Figure 2-10) on the rear panel. The CHECK LED on the rear panel is referred to as the system locator, and has the same function as the CHECK LED on the operation panel.

Figure 2-10 Location of the system locator

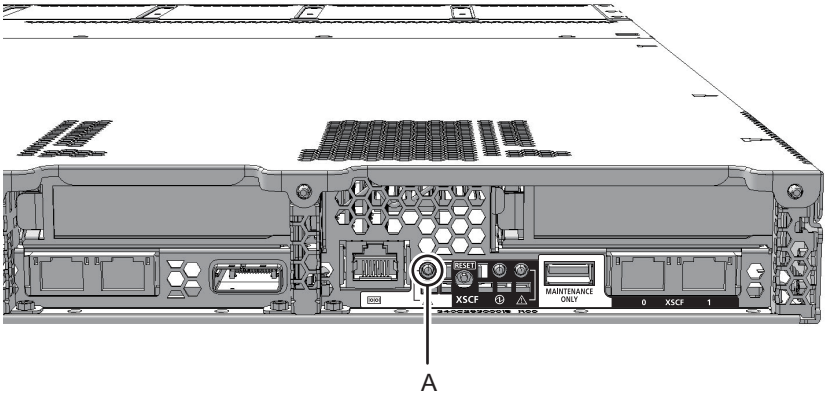

Table 2-8 Status of the system locator

Icon	Name	Color	State	Description
⚠	CHECK	Amber	On	Hardware has detected an error.
			Blinking	Chassis specified at execution of the XSCF command instructing the blinking. This (locator) is used to identify the location of the chassis requiring maintenance.
			Off	The system is in the normal state, or the power is disconnected or otherwise not being supplied.

2.4.3 LEDs on each component

Each component incorporates LEDs. If a component experiences an error, check the LEDs to see which component requires maintenance. Check the LEDs before starting maintenance work.
The LEDs on each component and the states that they indicate are as follows.

Figure 2-11 LEDs on the motherboard unit

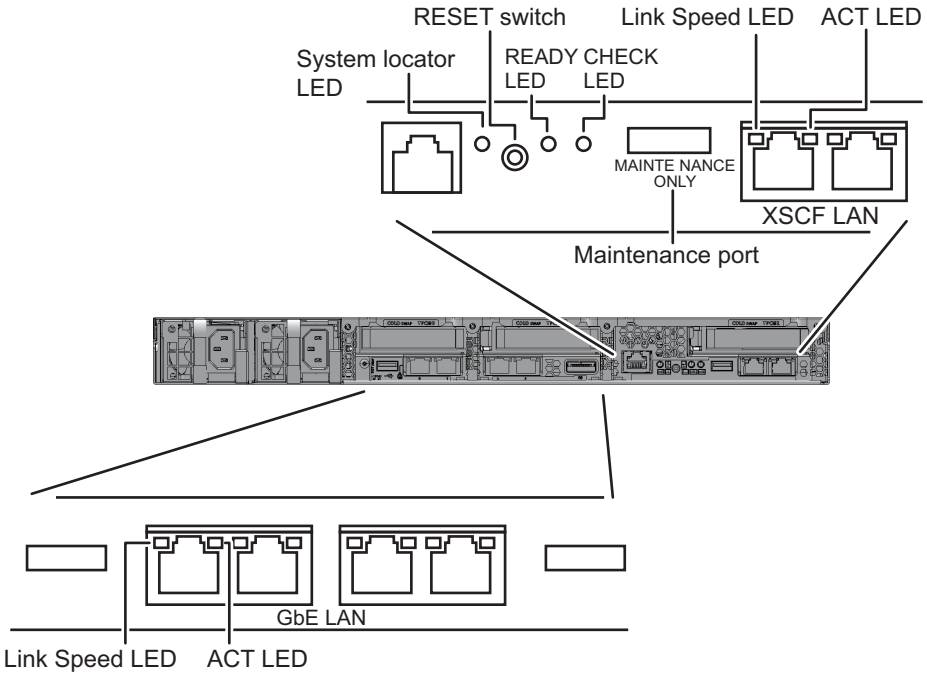

Table 2-9 LEDs on the motherboard unit and their states

Name	Color	State	Description
READY	Green	On	The XSCF is running.
		Blinking	The XSCF is being started.
		Off	XSCF is stopped.
CHECK	Amber	On	Indicates that an error has occurred. (Normal if the LED is turned off after it is on for a few seconds when the power is turned on)
		Off	Indicates the normal state.

Table 2-10 LEDs on the LAN port and their states

Name	Color	State	Description
ACT	Green	Blinking	Indicates that communication is being performed.
		Off	Indicates that communication is not being performed.
LINK SPEED	Amber	On	Indicates that the communication speed is 1 Gbps.
	Green	On	Indicates that the communication speed is 100 Mbps.
		Off	Indicates that the communication speed is 10 Mbps.

Figure 2-12 Locations of fan unit LEDs (on the MBU)

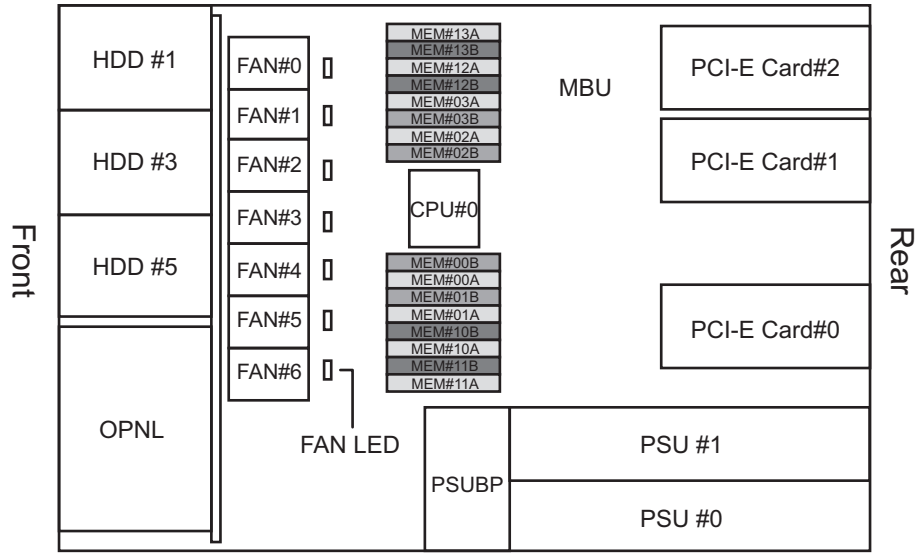

Table 2-11 LEDs for the fan units and their states

Name	Color	State	Description
CHECK	Amber	On	Indicates that an error has occurred.
		Blinking	Indicates that the component requires maintenance (this function is also referred to as the locator).
		Off	Indicates the normal state.

Figure 2-13 Location of the power supply unit LED

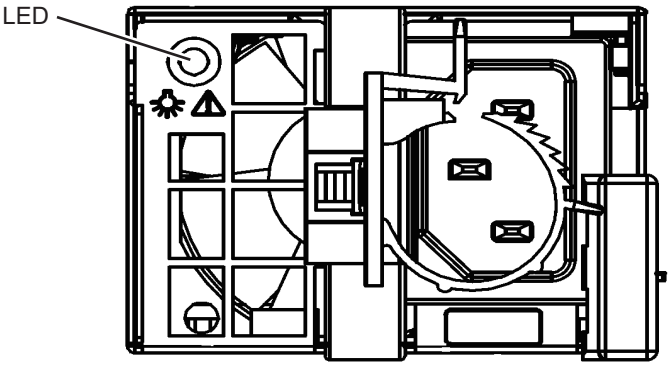

Table 2-12 LED on the power supply unit and its states

Name	Color	State	Description
CHECK	Green	On	Indicates that the input power is turned on and being supplied normally.
		Blinking	Indicates that the input power is turned on but the system is stopped.
	Amber	On	Indicates that an error has occurred. Indicates that the input power to this power supply unit is turned off in redundant operation.
		Blinking	Indicates the warning status (an error has occurred but the power supply unit is operating).
		Off	Indicates that power is not being supplied.

Figure 2-14 Locations of internal disk LEDs

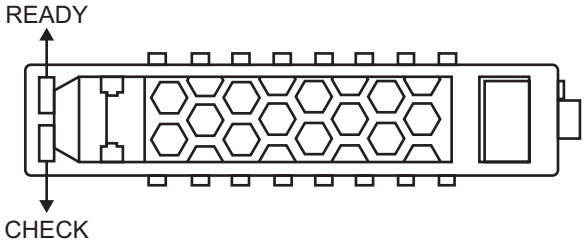

Table 2-13 LEDs on the internal disk and their states

Name	Color	State	Description
READY	Green	Blinking	Indicates that the disk is being accessed. This LED is normally on, but it blinks while the disk is being accessed. While the LED is blinking, maintenance such as removal of the disk cannot be performed.
		Off	Indicates that maintenance such as removal of the disk can be performed.
CHECK	Amber	On	Indicates that an error has occurred.
		Blinking	Indicates that the component requires maintenance (this function is also referred to as the locator).
		Off	Indicates the normal state.

Chapter 3

Types of Maintenance

This section describes the types of maintenance performed on the SPARC M10-1.

- Types of Maintenance Supported in the SPARC M10-1
- Active Maintenance
- System-stopped Maintenance (Inactive Maintenance)

Note that the terms used in this manual are defined as follows.

Table 3-1 Definitions of terms

Term	Definition
Physical partition requiring maintenance	Physical partition to which SPARC M10-1, in which Field Replaceable Unit (FRU) requiring maintenance is mounted, belongs
Chassis requiring maintenance	Chassis of SPARC M10-1, in which Field Replaceable Unit (FRU) requiring maintenance is mounted

3.1 Types of Maintenance Supported in the SPARC M10-1

The types of maintenance supported in the SPARC M10-1 depend on the system operation status during maintenance. The supported maintenance is divided into two types: active maintenance and system-stopped (inactive) maintenance.

- Active maintenance
  Type of maintenance performed while all of Oracle Solaris including logical domains is operating
- System-stopped maintenance (inactive maintenance)
  Type of maintenance performed while all of Oracle Solaris including logical domains is stopped

SPARC M10-1 has the only one physical partition. Thus, the state in which the physical partition requiring maintenance is stopped is the same as the state in which the entire system is stopped.

Each of the above two maintenance types is further divided into the two types of hot maintenance and cold maintenance.

- Hot maintenance
  Type of maintenance performed with the power cords connected to the chassis requiring maintenance
- Cold maintenance
  Type of maintenance performed with the power cords removed from the chassis requiring maintenance

3.2 Active Maintenance

The type of maintenance performed with Oracle Solaris operating on the physical partition is referred to as active maintenance. Note that active/cold maintenance is not supported on the SPARC M10-1.

Table 3-2 shows whether active maintenance is enabled for each FRU.

Table 3-2 Whether active maintenance (replacement/addition/removal) is enabled for each FRU

-: Maintenance cannot be performed.

FRU	Active/hot maintenance	Reference
PCIe card	- (*1)	(*1)
Internal disk	OK (*2)	Chapter 9
HDD backplane	-	
Power supply unit	OK (*3)	Chapter 11
PSU backplane	-	
Cable kit	-	
Operation panel	-	
Fan unit	OK	Chapter 15
Motherboard unit	-	
Memory	-	

*1 Active/hot maintenance can be performed on the PCIe cards mounted in the PCI expansion unit. For details, see "3.3 Types of Maintenance for the PCIe Card" in the *PCI Expansion Unit for Fujitsu SPARC M12 and Fujitsu M10/SPARC M10 Service Manual*.
*2 Supported only for the internal disks of devices other than a boot device. However, if the boot device has a redundant configuration (RAID configuration), active/hot maintenance can be performed on the internal disks of the boot device.
*3 If the XSCF startup mode is high-speed mode, hardware cannot be replaced using the replacefru command. Perform system-stopped (inactive)/cold maintenance.

3.3 System-stopped Maintenance (Inactive Maintenance)

The type of maintenance performed with Oracle Solaris stopped on the physical partition is referred to as system-stopped maintenance (inactive maintenance). SPARC M10-1 has the only one physical partition. Thus, the state in which the physical partition requiring maintenance is stopped is the same as the state in which the entire system is stopped.

Table 3-3 shows whether system-stopped maintenance (inactive maintenance) is enabled for each FRU.

Table 3-3 Whether system-stopped maintenance (inactive maintenance) (replacement/addition/removal) is enabled for each FRU

-: Maintenance cannot be performed.

FRU	System-stopped (inactive) /hot maintenance	System-stopped (inactive) /cold maintenance	Reference
PCIe card	- (*1)	OK	Chapter 8
Internal disk	OK	OK	Chapter 9
HDD backplane	-	OK	Chapter 10
Power supply unit	OK (*2)	OK	Chapter 11
PSU backplane	-	OK	Chapter 12
Cable kit	-	OK	Chapter 13
Operation panel	-	OK	Chapter 14
Fan unit	OK	OK	Chapter 15
Motherboard unit	-	OK	Chapter 16
Memory	-	OK	Chapter 16

*1 System-stopped (inactive)/hot maintenance can be performed on the PCIe cards mounted in the PCI expansion unit. For details, see "3.3 Types of Maintenance for the PCIe Card" in the *PCI Expansion Unit for Fujitsu SPARC M12 and Fujitsu M10/SPARC M10 Service Manual*.
*2 If the XSCF startup mode is high-speed mode, hardware cannot be replaced using the replacefru command. Perform system-stopped (inactive)/cold maintenance.

Chapter 4

Preparation and Precautions for Maintenance

This chapter describes the preparations that must be completed prior to performing any maintenance as well as the types of maintenance.

- Confirming the System Configuration
- Troubleshooting
- Maintenance Precautions

4.1 Confirming the System Configuration

This section describes how to check the hardware and software configurations. The system configuration must be the same before and after maintenance work. If an error occurs in the system, record the system configuration and the FRU state before starting maintenance. After maintenance, confirm that the system configuration is the same as that before maintenance.

4.1.1 Confirming the hardware configuration

Execute the showhardconf command to confirm the configuration and status of the FRU mounted in the chassis. Before performing any maintenance work, check and record the hardware configuration of the chassis.

1. **Log in to the XSCF shell.**
2. **Execute the showhardconf command to confirm the hardware configuration information.**

The following information appears:

- Current configuration and status
- Number of mounted Field Replaceable Units (FRUs)
- Status of the unit in which a physical partition error or degradation occurred
- Information on the PCI expansion unit
- Name properties of the PCI Express (PCIe) card

The following is an example of executing the showhardconf command.

```
XSCF> showhardconf -M
SPARC M10-1 ;
     + Serial:21xxxxxxxx; Operator_Panel_Switch:Service;
    + System_Power:Off; System_Phase:Cabinet Power Off;
    Partition#0 PPAR_Status:Powered Off;
    MBU Status:Normal; Ver:2209h; Serial:TZ01348006 ;
        + FRU-Part-Number:CA07363-D011 A0   /7088702                ;
        + Power_Supply_System: ;
        + Memory_Size:1024 GB; Type: B ;  (*1)
        CPU#0 Status:Normal; Ver:4141h; Serial:00010263;
            + Freq:3.200 GHz; Type:0x20;  (*2)
            + Core:16; Strand:2;          (*3)
        MEM#00A Status:Normal;
            + Code:ce8001M386B8G70BO0-YH94 0000-2151EFEB;
            + Type:47; Size:64 GB;
        MEM#01A Status:Normal;
            + Code:ce8001M386B8G70BO0-YH94 0000-2151EF8A;
            + Type:47; Size:64 GB;
                  (Omitted)
```

*1 For an MBU on which the SPARC64 X+ processor is mounted, "Type: B" is displayed. For an MBU on which the SPARC64 X processor is mounted, "Type: A" is displayed.
*2 If the SPARC64 X+ processor is mounted, "2.800 GHz; Type:0x20", "3.200 GHz; Type:0x20", or "3.700 GHz; Type:0x20" is displayed.
If the SPARC64 X processor is mounted, "2.800 GHz; Type:0x10" is displayed.
*3 If the SPARC64 X+ (3.7 GHz (8 cores)) processor is mounted, "Core:8" is displayed.

4.1.2 Confirming the software and firmware configurations

The software and firmware configurations and versions affect system operation. To change the configuration or investigate a problem, check the latest state and check for any problems in the software.

Confirming the software configuration

Use Oracle Solaris commands to check the software configuration.
If you are logged in to the XSCF console, switch to the control domain console by executing the console command beforehand.
Table 4-1 lists the commands used for checking the software configuration.

Table 4-1 Commands for checking the software configuration

Command	Description
pkg (Oracle Solaris 11) showrev (Oracle Solaris 10)	Displays Oracle Solaris correction information and the version.
ldm	Displays logical domain configuration information.

1. **Log in to the control domain console of the physical partition where the FRU requiring maintenance is mounted.**
   For details on how to log in to the control domain console, see "8.3 Switching to the Control Domain Console From the XSCF Shell" in the *Fujitsu SPARC M12 and Fujitsu M10/SPARC M10 System Operation and Administration Guide*.
2. **Execute the pkg command to display Oracle Solaris correction information and the version.**
   For Oracle Solaris 11, execute the pkg command.

```
# pkg info entire
          Name: entire
       Summary: entire incorporation including Support Repository Update
(Oracle Solaris 11.1.12.5.0).
```

For Oracle Solaris 10, execute the showrev command.

```
# showrev -p
```

To display the Oracle VM Server for SPARC version, execute the ldm command.

```
# ldm -V
Logical Domains Manager (v 3.1)

        Hypervisor control protocol v 1.9
        Using Hypervisor MD v 1.3
```

Confirming the firmware configuration

Confirm the firmware configuration with the version command, which is an XSCF shell command.

1. **Log in to the XSCF shell.**
2. **Execute the version command to confirm the firmware version information.**
   In the following example, "-c xcp" is entered to confirm the overall XCP version.

```
XSCF> version -c xcp
```

4.1.3 Confirming the FRU information and resource information

Use XSCF shell commands to check the FRU information and resource information.

Table 4-2 lists the commands used for checking the FRU information and resource information. For details on each command, see the *Fujitsu SPARC M12 and Fujitsu M10/SPARC M10 XSCF Reference Manual* for the XCP firmware version being used.

Table 4-2 Commands for checking FRU information and resource information

Command	Description
showstatus	Displays the FRU status. Out of the FRUs in the system configuration, this command displays information on a faulty or degraded unit or FRU.
showboards	Displays information on a physical system board (PSB). Displays information on a physical system board that belongs to the specified physical partition and information on all the physical system boards that are mounted.
showpcl	Displays the configuration information for a physical partition (hardware resource information).
showfru	Displays the setting information for a device.

4.2 Troubleshooting

This section explains suspected failure conditions. Use the flow to confirm whether there is a failure and identify the failure location in the following cases. For details on the flow for confirming whether there is a failure, see "4.2.1 Confirming whether there is a failure."

- When the CHECK LED is on
- When an error message is displayed on the console
- When an error is displayed as a result of executing a command for checking the status
- When an error is displayed in the error log

4.2.1 Confirming whether there is a failure

This section describes the flow for confirming whether there is a failure. Also apply this flow to identify failures in the PCI expansion unit.

Figure 4-1 Troubleshooting flow

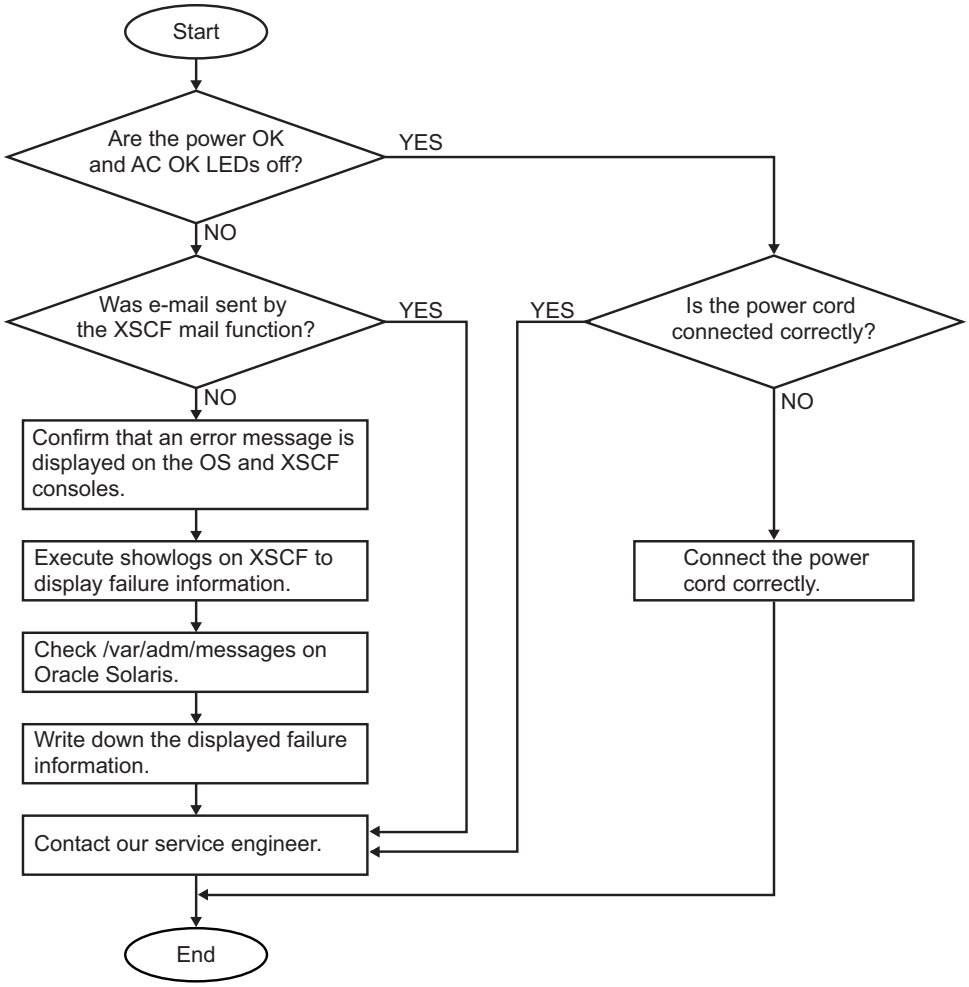

4.2.2 Identifying a failure

This section describes how to identify a failure. Use the flow described in "4.2.1 Confirming whether there is a failure" to determine the appropriate way of checking for a failure.

Checking the LED indications

Check the LEDs on the operation panel, rear panel, and each component to identify the FRU requiring maintenance. Check the status of an FRU from its LED before starting maintenance work on the FRU.

- Operation panel LEDs

You can determine the status of the system by checking the LEDs on the operation panel. For details, see "2.4.1 Operation panel LEDs."

- Rear panel LED
  You can determine the status of the system by checking the CHECK LED on the rear panel of the chassis, which duplicates the CHECK LED on the operation panel. For details, see "2.4.2 LEDs on the rear panel (System locator)."

- LED of each FRU
  If an error occurs in the hardware in the chassis, you can determine the location of the error by checking the LED of the FRU that incorporates the failed hardware. For details, see "2.4.3 LEDs on each component."

  Note that some FRUs, such as memory, do not have mounted LEDs. To check the status of a FRU that does not have an LED, execute XSCF shell commands such as the showhardconf command from the maintenance terminal. For details, see "Checking the FRU status."

Checking error messages

Display error messages to check log information and an error overview.
You can use either of the following two methods to check the error messages:

- Checking error log information with the XSCF shell
  For details, see "12.1 Checking a Log Saved by the XSCF" in the *Fujitsu SPARC M12 and Fujitsu M10/SPARC M10 System Operation and Administration Guide*.

- Checking messages on Oracle Solaris
  For details, see "12.2 Checking Warning and Notification Messages" in the *Fujitsu SPARC M12 and Fujitsu M10/SPARC M10 System Operation and Administration Guide*.

Checking the FRU status

Execute XSCF firmware commands to determine the system hardware configuration and the status of each FRU.

showhardconf command

Execute the showhardconf command to check the FRU-related information.

1. **Log in to the XSCF shell.**
2. **Execute the showhardconf command to check the FRU list.**
   A failed component is indicated by an asterisk (*) at the beginning of the line.

```
XSCF> showhardconf
SPARC M10-1;
    + Serial:2101151008A; Operator_Panel_Switch:Locked;
    + System_Power:Off; System_Phase:Cabinet Power Off;
------------------------Omitted------------------------
PCI#1 Status:Normal; Name_Property:;
            + Vendor-ID:14e4; Device-ID:1648;
```

```
            + Subsystem_Vendor-ID:10cf; Subsystem-ID:13a0;
            + Model: LPe1250-F8-FJ;
            + Connection:PCIBOX#X07P;
*           PCIBOX#X0DF Status:Faulted; Ver:0512 Serial:XCX0DF;
                + FRU-Part-Number:CF00541-0314 05   /501-6937-05;
                IOB Status:Normal; Serial:XX00KA; Type:PCI-X;
                    + FRU-Part-Number:CF00541-0316 03   /501-6938-05;
             LINKBORAD Status:Faulted; Ver:0512 Serial:XCX0DF;
                    + FRU-Part-Number:CF00541-0314 05   /501-6937-05;
                PCI#0 Name_Property:fibre-channel;
                    + Vendor-ID:14e4; Device-ID:1648;
                    + Subsystem_Vendor-ID:10cf; Subsystem-ID:13a0;
                    + Model: LPe1250-F8-FJ;
```

showstatus command

Execute the showstatus command to check the FRU status.

1. **Log in to the XSCF shell.**
2. **Execute the showstatus command to check the status.**
   A faulty FRU is indicated by an asterisk (*) at the beginning of the line.

```
XSCF> showstatus
    MBU Status:Normal;
*       MEM#0A Status:Faulted;
```

The FRU status is displayed after the "Status:" string.
Table 4-3 describes the FRU status.

Table 4-3 FRU status

Display	Description
Normal	The unit is in the normal state.
Faulted	The unit is faulty and is not operating.
Degraded	A part of the unit has failed or degraded, but the unit is running.
Deconfigured	Due to the failure or degradation of another unit, the target unit and components of its underlying layer has been degraded, though there is no problem in them.
Maintenance	Maintenance is being performed. The replacefru or addfru command is being executed.

Checking the status of a PCI expansion unit

If a PCI expansion unit is connected, execute the ioxadm command to check the status of the PCI expansion unit.

ioxadm command

Execute the ioxadm command to determine the environmental conditions (temperature, voltage, etc.) or LED indications of the PCI expansion unit.

1. **Log in to the XSCF shell.**
2. **Execute the ioxadm command to check the environmental conditions of the specified PCI expansion unit.**
   To specify a PCI expansion unit, enter the serial number of the PCI expansion unit after determining it with the ioxadm list command.

   The following example shows the environmental conditions for PCIBOX#2008. "2008" is the last four digits of the serial number of the PCI expansion unit.

```
XSCF> ioxadm env -te PCIBOX#2008
Location                    Sensor             Value Resolution Units
PCIBOX#2008                 AIRFLOW          180.000      0.000 CHM
PCIBOX#2008                 P_CONSUMPTION     68.000      0.000 W
PCIBOX#2008/PSU#0           FAN             3936.000      0.000 RPM
PCIBOX#2008/PSU#1           FAN             3584.000      0.000 RPM
PCIBOX#2008/FAN#0           FAN             3374.000      0.000 RPM
PCIBOX#2008/FAN#1           FAN             3374.000      0.000 RPM
PCIBOX#2008/FAN#2           FAN             3374.000      0.000 RPM
PCIBOX#2008/IOBT            T_INTAKE          26.000      0.000 C
PCIBOX#2008/IOBT            T_PART_NO0        31.500      0.000 C
PCIBOX#2008/IOBT            T_PART_NO1        30.750      0.000 C
PCIBOX#2008/IOBT            T_PART_NO2        31.500      0.000 C
PCIBOX#2008/IOBT            V_12_0V           12.069      0.000 V
PCIBOX#2008/IOBT            V_3_3_NO0          3.293      0.000 V
PCIBOX#2008/IOBT            V_3_3_NO1          3.295      0.000 V
PCIBOX#2008/IOBT            V_3_3_NO2          3.291      0.000 V
PCIBOX#2008/IOBT            V_3_3_NO3          3.300      0.000 V
PCIBOX#2008/IOBT            V_1_8V             1.804      0.000 V
PCIBOX#2008/IOBT            V_0_9V             0.900      0.000 V
```

Checking log information

Execute the showlogs command to check error log information.

1. **Log in to the XSCF shell.**
2. **Execute the showlogs command to determine the error log information.**
   The log information is listed in order of date, with the oldest appearing first.

   The following example shows that an Alarm occurred in PSU#1 at 12:45:31 on Oct 20, and the status changed to Warning at 15:45:31 on the same day.

```
XSCF> showlogs error
Date: Oct 20 12:45:31 JST 2012
    Code: 00112233-445566778899aabbcc-8899aabbcceeff0011223344
    Status: Alarm                 Occurred: Oct 20 12:45:31.000 JST 2012
    FRU: /PSU#1
```

```
    Msg: ACFAIL occurred (ACS=3)(FEP type = A1)
Date: Oct 20 15:45:31 JST 2012
    Code: 00112233-445566778899aabbcc-8899aabbcceeff0011223344
    Status: Warning                Occurred: Oct 20 15:45:31.000 JST 2012
    FRU: /PSU#1
    Msg: ACFAIL occurred (ACS=3)(FEP type = A1)
```

Table 4-4 shows operands of the showlogs command and the log to be displayed.

Table 4-4 Operands of the showlogs command and the log to be displayed

Operand	Description
error	Lists the error log.
event	Lists the event log.
power	Lists the power log.
env	Lists the temperature history.
monitor	Lists the monitoring message log.
console	Lists the console message log.
ipl	Lists the IPL message log.
panic	Lists the panic message log.

Checking the messages output by the predictive self-repairing tool

Check the messages output from the Oracle Solaris Fault Manager predictive self-repairing tool, running on Oracle Solaris. Oracle Solaris Fault Manager supports the following functions:

- Receives telemetry information about errors.
- Performs troubleshooting.
- Disables the FRUs that have experienced errors.
- Turns on the LED of an FRU that has experienced an error and displays the details in a system console message.

Table 4-5 lists typical messages that are generated if an error occurs. These messages indicate that the fault has already been diagnosed. If corrective actions can be taken by the system, this indicates that they have already been taken. In addition, if the system is running, corrective actions continue to be applied.
Messages are displayed on the console and are recorded in the /var/adm/messages file.

Table 4-5 Predictive self-repairing messages

Output displayed	Description
Nov 1 16：30：20 dt88-292 EVENT-TIME：Tue Nov 1 16：30：20 PST 2005	EVENT-TIME: Time stamp of the diagnosis

Table 4-5 Predictive self-repairing messages *(continued)*

Output displayed	Description
Nov 1 16：30：20 dt88-292 PLATFORM：ORCL,SPARC64-X, CSN：-,HOSTNAME：dt88-292	PLATFORM: Description of the chassis in which the error occurred
Nov 1 16：30：20 dt88-292 SOURCE：eft, REV：1.13	SOURCE: Information on the diagnosis engine used to identify the error
Nov 1 16：30：20 dt88-292 EVENT-ID：afc7e660-d609-4b2f-86b8-ae7c6b8d50c4	EVENT-ID: Universally unique event ID for this error
Nov 1 16：30：20 dt88-292 DESC： Nov 1 16：30：20 dt88-292 A problem was detected in the PCI Express subsystem	DESC: Basic description of the error
Nov 1 16：30：20 dt88-292 Refer to http://support.oracle.com/msg/SUN4-8000-0Y for more information.	Website: Where to find specific information and actions to apply in the event of this error
Nov 1 16：30：20 dt88-292 AUTO-RESPONSE：One or more device instances may be disabled.	AUTO-RESPONSE: What the system has done (if anything) to alleviate any subsequent problems
Nov 1 16：30：20 dt88-292 IMPACT：Loss of services provided by the device instances associated with this fault.	IMPACT: Description of the assumed impact of the failure
Nov 1 16：30：20 dt88-292 REC-ACTION：Schedule a repair procedure to replace the affected device.Use Nov 1 16：30：20 dt88-292 fmdump -v –u EVENT_ID to identify the device or contact Sun for support.	REC-ACTION: Brief description of the corrective action the system administrator should apply

Identifying the location of the chassis requiring maintenance

Execute the setlocator command to identify the location of the chassis requiring maintenance by causing the CHECK LED on the operation panel and the CHECK LED (locator) on the rear panel to blink.

1. **Log in to the XSCF shell.**
2. **Execute the setlocator command to blink the CHECK LED of the chassis requiring maintenance, and determine its location.**
   The CHECK LEDs on the operation and rear panels blink.

```
XSCF> setlocator blink
```

For details on where to find and how to check the CHECK LEDs, see "2.4 Checking the LED Indications."

4.2.3 Downloading error log information

This section describes the operations for downloading error log information.
To download error log information, use the XSCF log fetch function. The XSCF has a USB port that is specifically for maintenance, allowing maintenance information such as error logs to be easily obtained.
For details, see "12.1.15 Saving a Log to a File With Snapshot" and "12.1.16 Saving a Log to a Local USB Device" in the *Fujitsu SPARC M12 and Fujitsu M10/SPARC M10 System Operation and Administration Guide*.

4.3 Maintenance Precautions

This section describes the precautions for maintenance.

4.3.1 Precautions for replacement

This section describes the precautions for replacement.

Precautions for motherboard unit replacement

- Do not replace the motherboard unit and the PSU backplane at the same time. If you replace the motherboard unit and the PSU backplane at the same time, the system may fail to operate correctly. Replace the motherboard unit or the PSU backplane, and then execute the showhardconf or showstatus command to verify that the replaced Field Replaceable Unit (FRU) is fully operational. Then, replace the other FRU.
- The CPU and XSCF on the motherboard unit cannot be replaced individually. Replace the motherboard unit.
- When replacing the motherboard unit, the memory should be removed from the old unit and remounted on the new unit. Always mount the memory modules in the same locations as they were mounted on the old motherboard unit.
- Before replacing the motherboard unit, execute the dumpconfig command to save the system setting information. When the motherboard unit is replaced, the CPU Activation setting information and CPU Activation key may be deleted. To restore the CPU Activation setting information and CPU Activation key that have been saved with the dumpconfig command, execute the restoreconfig command. For details, see "10.10 Saving/Restoring XSCF Settings Information" in the *Fujitsu SPARC M12 and Fujitsu M10/SPARC M10 System Operation and Administration Guide*.
- Set the system time.
  After replacement of the motherboard unit has been completed, set the system time. For details, see "Notes on Maintenance of a CPU Memory Unit, Motherboard Unit, XSCF Unit, PSU Backplane, or Crossbar Backplane Unit" in the *Fujitsu*

M10/SPARC M10 Systems Product Notes for the latest XCP version.

- Check the XCP version.
  If you replace the motherboard unit and switch the microSD card, the CMU firmware versions displayed for the current and reserve XCPs by the version command do not match when you check the XCP firmware version after executing the testsb command. This does not affect system operation. If you start the system when the current and reserve XCPs have been switched, the CMU firmware stored on the microSD card is automatically applied.
- The type of motherboard unit varies depending on the number of CPU clocks.
- If you replace the microSD card along with the motherboard unit, dispose of the microSD card mounted on the old motherboard unit by appropriate means such as cutting it with cutting pliers. The old microSD card stores the user information, IP address, and other information set in the XSCF firmware.

Precautions for memory replacement

- When you replace a memory module, make sure that you install the new module in the same position as the original one.

Precautions for PSU backplane replacement

- If you replace the motherboard unit and the PSU backplane at the same time, the system may fail to operate correctly. Replace the motherboard unit or the PSU backplane, and then execute the showhardconf or showstatus command to verify that the replaced Field Replaceable Unit (FRU) is fully operational. Then, replace the other FRU.
- Set the system time.
  After replacement of the PSU backplane has been completed, set the system time. For details, see "Notes on Maintenance of a CPU Memory Unit, Motherboard Unit, XSCF Unit, PSU Backplane, or Crossbar Backplane Unit" in the *Fujitsu M10/SPARC M10 Systems Product Notes* for the latest XCP version.

Precautions for power supply unit replacement

- There are two power supply units. Thus, the system can continue operating even if one of the units fails. Do not, however, operate the system for an extended period while one unit has failed.
- When replacing multiple power supply units, replace one unit at a time. If redundancy of the power supply units cannot be secured, perform maintenance with the inactive/cold (system stopped) method.
- Do not force a power supply unit into its slot. Using excessive force may damage the FRU and chassis.
- The type of power supply unit varies depending on the number of CPU clocks.

Precautions for fan unit replacement

- When you replace multiple fan units, do so one by one. If redundancy of the fan units cannot be secured, perform maintenance using the inactive/cold (system

stopped) method.

- The fan units have a redundant configuration. Thus, the system can continue operating even if one of the fan units fails. Do not, however, operate the system for an extended period with one failed unit. Replace any failed fan unit immediately.

Precautions for PCIe card replacement

- Before replacing the PCIe card, stop the system and remove the PCIe riser from the motherboard unit.

Precautions for HDD backplane/operation panel replacement

- When removing the HDD backplane and the operation panel, be careful not to damage electronic components such as connectors.

4.3.2 Precautions for expansion

Precautions for memory expansion

- Observe the memory installation rules when you expand memory. For details, see "2.2.1 Memory installation rules."
- When you expand memory by 64 GB, apply XCP 2090 or later.
- When you install a memory module of a different capacity, apply XCP 2052 or later.

Precautions for internal disk expansion

- When you expand an internal disk, remove the filler unit from the slot into which you intend to install the internal disk.
- Keep the removed internal disk filler unit because it will be needed if an internal disk is subsequently reduced.

Precautions for PCIe card expansion

- When performing PCIe card expansion, remove the filler for a PCIe card from the PCIe riser. The PCIe card filler is easily removed. Be careful not to drop it.
- Store the removed PCIe card filler in a safe place because it will be needed if you subsequently remove the PCIe card.

4.3.3 Precautions for reduction

Precautions for memory reduction

- Observe the memory installation rules when you reduce memory. For details, see "2.2.1 Memory installation rules."

Precautions for internal disk reduction

- When you reduce an internal disk, install the filler unit into the slot from which the internal disk has been removed.

Precautions for PCIe card reduction

- When performing PCIe card reduction, remove the PCIe card from the PCIe riser, and then install a filler for the PCIe card, and mount it on the motherboard unit. The PCIe card filler is easily removed. Be careful not to drop it.

Chapter 5

Preparations Required for Maintenance

This chapter describes the procedures for the preparations before you physically remove an FRU. See this chapter, as required, when performing maintenance on each FRU described in Chapter 8 onward.

- Preparing Tools Required for Maintenance
- Switching the Mode Switch to Service Mode
- Checking the Operating Condition and Resource Usage Status
- Enabling the Removal of an Internal Disk
- Stopping the Entire System
- Saving Setting Information and Configuration Information
- Releasing an FRU from the System with the replacefru Command
- Accessing an FRU

Caution - Do not operate the Field Replaceable Unit (FRU) requiring maintenance while OpenBoot PROM is running (the ok prompt is displayed). After turning off the physical partition (stopping the system) or starting Oracle Solaris, operate the FRU requiring maintenance.

5.1 Preparing Tools Required for Maintenance

This section describes the tools required for maintenance. Table 5-1 lists the tools required for maintenance.

Table 5-1 Maintenance tools

Item	Use
Phillips screwdriver (No.2)	For removing or installing screws
Torx driver (T10)	For removing or installing screws
Wrist strap	For static grounding
ESD mat	For static grounding

5.2 Switching the Mode Switch to Service Mode

Note - The mode switch on the operation panel does not need to be changed in active maintenance.

1. **Switch the mode switch on the operation panel to Service mode.**
   For details, see "2.3.2 Control function of the operation panel."

5.3 Checking the Operating Condition and Resource Usage Status

This section describes the checking of the operating condition of the logical domain and the resource usage status before maintenance is performed on each FRU.

5.3.1 Checking the operating condition of the physical partition or logical domain

In the following execution example, the operating condition of the physical partition and logical domain is checked from firmware.

1. **Log in to the XSCF shell.**
2. **Execute the showpparstatus command to confirm the operating condition of the physical partition.**
   In the following example, [PPAR Status] of PPAR-ID 00 displays "Running", which indicates that the physical partition is operating.

```
XSCF> showpparstatus -p 0
PPAR-ID        PPAR Status
00             Running
```

3. **Execute the showdomainstatus command to confirm the operating condition of the logical domain.**
   In the following example, [Status] of the logical domains of PPAR-ID 00 displays "Solaris running," which indicates that Oracle Solaris is operating.

```
XSCF> showdomainstatus -p 0
Logical Domain Name   Status
primary               Solaris running
guest0                Solaris running
guest1                Solaris running
iodom0                Solaris running
iodom1                Solaris running
sdiodomain            Solaris running
sr-iodomain           Solaris running
```

5.3.2 Checking the assignment status of I/O devices

In the following execution example, the operating condition of the logical domain, the resource usage status, and the assignment status of I/O devices are checked from Oracle Solaris on the logical domain. For details, see "3.2 Operations and Commands Related to Logical Domain Configurations" in the *Fujitsu SPARC M12 and Fujitsu M10/SPARC M10 Domain Configuration Guide*.

1. **Log in to Oracle Solaris on the logical domain.**
2. **Execute the following ldm list-domain command to check the operating condition of the logical domains.**

```
# ldm list-domain
```

Note - Record the output data of the ldm list-domain command. You will need it to check the operating condition of the logical domain and the amount of memory assigned to the logical domain.

3. **Execute the following ldm list-devices command to check the resource usage status.**

```
# ldm list-devices -a
```

4. **Execute the following ldm list-io command to check the assignment status of I/O devices.**

```
# ldm list-io
```

For maintenance on a PCIe card, retain the output data of the ldm list-io command, since you will need it later when restoring the original configuration after maintenance.

5.3.3 Checking the usage status of the internal disk

In the following execution example, the configurations and states of devices in pools and errors generated from the devices are checked.

1. **Log in to Oracle Solaris on the logical domain.**
2. **Execute the zpool status command to check the configurations and operating conditions of devices.**

```
# zpool status
  pool: rpool
 state: ONLINE
  scan: none requested
config:
        NAME                      STATE     READ WRITE CKSUM
        rpool                     ONLINE       0     0     0
          c1t50000393E802CC86d0   ONLINE       0     0     0
errors: No known data errors
  pool: testpool
 state: ONLINE
  scan: none requested
config:
        NAME                      STATE     READ WRITE CKSUM
        testpool                  ONLINE       0     0     0
          c1t500003930821CE9Ad0   ONLINE       0     0     0
          c1t500003930820AB02d0   ONLINE       0     0     0
errors: No known data errors
```

5.4 Enabling the Removal of an Internal Disk

This section describes the procedure for enabling the removal of an internal disk by using the hot plug function.

5.4.1 How to identify a disk slot

To maintain an internal disk drive, you need to know the physical device name or logical device name of a drive to be installed or removed. If a disk error occurs in the system, from the system console, you can normally check for messages regarding a disk that is likely to fail or that has already failed. This information is also recorded in the /var/adm/messages file.

In these error messages, a failed internal disk drive is normally indicated with a physical device name or logical device name. In addition, depending on the application, the slot number of the disk may be reported.

The procedure to confirm the mounting location information on the disk varies depending on the operating system.

- **For Oracle Solaris 11**
  For details, see "Using the format command (Oracle Solaris 11)" or "Using the diskinfo command (Oracle Solaris 11)."
- **For Oracle Solaris 10**
  For details, see "Using the diskinfo command (Oracle Solaris 10)."

Using the format command (Oracle Solaris 11)

1. **Execute the format command to confirm the disk slot.**
   (1) to (4) in the following example represent:

   (1): Logical path name of the disk

   (2): The disk is mounted in the HDD00 slot

   (3): The disk is mounted in the HDD01 slot

   (4): The disk is mounted in the HDD02 slot

```
# format
Searching for disks...done
AVAILABLE DISK SELECTIONS:
       0. c2t50000393B81B3A36d0 <TOSHIBA-MBF2600RC-3706 cyl 46873 alt 2 hd 20
sec 625> <-- (1)
          /pci@8000/pci@4/pci@0/pci@0/scsi@0/iport@f/disk@w50000393b81b3a36,0
          /dev/chassis/SYS/HDD00/disk <-- (2)
       1. c2t500000E01FB332A2d0 <FUJITSU-MBD2600RC-3701 cyl 46873 alt 2 hd 20
sec 625> <-- (1)
          /pci@8000/pci@4/pci@0/pci@0/scsi@0/iport@f/disk@w500000e01fb332a2,0
          /dev/chassis/SYS/HDD01/disk <-- (3)
       2. c2t50000393B81B4D7Ad0 <TOSHIBA-MBF2600RC-3706 cyl 46873 alt 2 hd 20
sec 625> <-- (1)
          /pci@8000/pci@4/pci@0/pci@0/scsi@0/iport@f/disk@w50000393b81b4d7a,0
          /dev/chassis/SYS/HDD02/disk <-- (4)
Specify disk (enter its number):
```

Using the diskinfo command (Oracle Solaris 11)

1. **Execute the diskinfo command to confirm the disk slot.**
   (1) to (3) in the following example represent:
   (1): The device path name and logical path name of the disk mounted in HDD 0
   (2): The device path name and logical path name of the disk mounted in HDD 1
   (3): The device path name and logical path name of the disk mounted in HDD 2

```
# diskinfo
D:devchassis-path                           c:occupant-compdev
------------------------------------------  ---------------------
/dev/chassis//SYS/MBU/HDD0                  -
/dev/chassis//SYS/MBU/HDD1                  -
/dev/chassis//SYS/MBU/HDD2                  -
/dev/chassis//SYS/MBU/HDD3                  -
/dev/chassis//SYS/MBU/HDD4                  -
/dev/chassis//SYS/MBU/HDD5                  -
/dev/chassis//SYS/MBU/HDD6                  -
/dev/chassis//SYS/MBU/HDD7                  -
/dev/chassis/SYS/HDD00/disk                 c0t50000393B81B3A36d0 <-- (1)
/dev/chassis/SYS/HDD01/disk                 c0t500000E01FB332A2d0 <-- (2)
/dev/chassis/SYS/HDD02/disk                 c0t50000393B81B4D7Ad0 <-- (3)
/dev/chassis/SYS/HDD03/disk
/dev/chassis/SYS/HDD04/disk
/dev/chassis/SYS/HDD05/disk
/dev/chassis/SYS/HDD06/disk
/dev/chassis/SYS/HDD07/disk
#
```

Using the diskinfo command (Oracle Solaris 10)

1. **Execute the diskinfo command to confirm the disk slot.**
   (1) to (3) in the following example represent:
   (1): The device path name and logical path name of the disk mounted in HDD 0
   (2): The device path name and logical path name of the disk mounted in HDD 1
   (3): The device path name and logical path name of the disk mounted in HDD 2

```
# diskinfo -ap

Enclosure path:         TZ01232002-physical-hba-0
Chassis Serial Number:  TZ01232002-physical-hba-0
Chassis Model:          ORCL,SPARC64-X

Enclosure path:         /dev/es/ses0
Chassis Serial Number:  500000e0e04901bf
Chassis Model:          FUJITSU-NBBEXP

Label      Disk name               Vendor   Product          Vers
```

```
---------- ----------------------  -------- ---------------- ----
HDD_0      c0t50000393B81B3A36d0   TOSHIBA  MBF2600RC        3706 <-- (1)
        Physical path
        --------------------------------
        0: /pci@8000/pci@4/pci@0/pci@0/scsi@0/iport@f/disk@w50000393b81b3a36,0
HDD_1      c0t500000E01FB332A2d0   TOSHIBA  MBF2600RC        3706 <-- (2)
        Physical path
        --------------------------------
        0: /pci@8000/pci@4/pci@0/pci@0/scsi@0/iport@f/disk@w500000e01fb332a2,0
HDD_2      c0t50000393B81B4D7Ad0   TOSHIBA  MBF2600RC        3706 <-- (3)
        Physical path
        --------------------------------
        0: /pci@8000/pci@4/pci@0/pci@0/scsi@0/iport@f/disk@w50000393b81b4d7a,0
```

5.4.2 Releasing an internal disk from the system

To use the hot plug function, the hotplug service of Oracle Solaris needs to be enabled. Check the status of the service. If it is disabled, enable the hotplug service in the following procedure. The hot plug function is available only on the control domain and root domain.

Note - Unless the system has a redundant configuration, the data on the internal disk will be lost. Thus, perform this operation only after backing up the data in advance. In addition, active/hot maintenance of the boot device in a non-redundant configuration cannot be performed.

```
# svcs hotplug ← If the STATE is disabled, enable the service.
# svcadm enable hotplug ← Enables the hotplug service.
```

For details on the cfgadm command used here, see "2 Dynamically Configuring Devices" in the *Managing Devices in Oracle Solaris 11.2* or "Dynamically Configuring Devices (Tasks)" in the *Oracle Solaris Administration: Devices and File Systems*.

1. **Execute the cfgadm command to check the configuration of the internal disk.**
   If you replace or reduce an internal disk, use the cfgadm -a command to check the Ap_ID of the disk requiring maintenance and make a note of it. The Ap_ID refers to a string such as "c4::dsk/c4t5000039428298FFEd0".

   If you expand an internal disk, use the cfgadm -a command to check the number of disks mounted.

```
# cfgadm -a
```

2. **Stop all applications from using the internal disk.**
3. **Execute the cfgadm command to release the internal disk requiring maintenance from the system.**
   Enter the Ap_ID you noted in advance.

```
# cfgadm -c unconfigure Ap_ID
```

4. **Execute the cfgadm command to confirm that the internal disk requiring maintenance is disconnected.**
   The disconnected internal disk is displayed as "unconfigured."

```
# cfgadm -a
```

5. **Execute the cfgadm command to blink the CHECK LED of the internal disk requiring maintenance, and determine its location.**
   Enter the Ap_ID you noted in advance.

```
# cfgadm -x led=fault,mode=blink Ap_ID
```

6. **Check the following LEDs to determine whether the internal disk requiring maintenance can be removed:**
   - READY LED (green) of the internal disk: On
   - CHECK LED (amber) of the internal disk: Blinking

5.5 Stopping the Entire System

This section describes the procedure for stopping the entire system.
Stop the system in either of the following two ways.

- Stopping the system with the XSCF command
- Stopping the system from the operation panel

Note - Before stopping the system, inform the users that the system will be stopped.

Note - When a physical partition is stopped by the operation of the XSCF command or the operation panel, all the logical domains on the physical partition are stopped. Stop applications as required.

5.5.1 Stopping the system with the XSCF command

1. **Confirm that the mode switch on the operation panel is in Service mode.**
2. **Log in to the XSCF shell.**
3. **Execute the poweroff command.**
   Enter "y" in response to the confirmation message.
   In the following example, the displayed status of PPAR-ID 00 is "Powering off,"

so you can see that the power-off instruction for the physical partition completed successfully.

```
XSCF> poweroff -a
PPAR-IDs to power off:00
Continue? [y|n] :y
00 : Powering off
```

The following processes are performed.

- Oracle Solaris is completely shut down.
- The system stops and enters the POWERON READY state (The XSCF is running).

Note - The order in which guest domains shut down depends on the shut-down group setting of Oracle VM Server for SPARC.

---

4. **Check that the POWER LED on the operation panel is off.**
5. **Execute the showpparstatus command to confirm that the power to the physical partition is turned off.**
   In the following example, [PPAR Status] of PPAR-ID 00 displays "Powered Off", which indicates that the power to the physical partition has been turned off.

```
XSCF> showpparstatus -a
PPAR-ID         PPAR Status
00              Powered Off
```

6. **Execute the showdomainstatus command to confirm the operating condition of the logical domain.**
   In the following example, [Status] of the logical domain displays "Solaris powering down," indicating the power-off processing of Oracle Solaris.

```
XSCF> showdomainstatus -p 0
Logical Domain Name    Status
primary                Solaris powering down
```

5.5.2 Stopping the system from the operation panel

1. **Confirm that the mode switch on the operation panel is in Service mode.**
2. **Press the power switch on the operation panel for 4 seconds or more.**
   For details, see "2.3.2 Control function of the operation panel."
3. **Check that the POWER LED on the operation panel is off.**
4. **Execute the showpparstatus command to confirm that the power to the physical partition is turned off.**
   In the following example, [PPAR Status] of PPAR-ID 00 displays "Powered Off",

which indicates that the power to the physical partition has been turned off.

```
XSCF> showpparstatus -a
PPAR-ID         PPAR Status
00              Powered Off
```

5. **Execute the showdomainstatus command to confirm the operating condition of the logical domain.**
   In the following example, [Status] of the logical domain displays "Solaris powering down," indicating the power-off processing of Oracle Solaris.

```
XSCF> showdomainstatus -p 0
Logical Domain Name   Status
primary               Solaris powering down
```

5.6 Saving Setting Information and Configuration Information

5.6.1 Saving XSCF setting information

This section describes how to save the following XSCF setting information:

- Network configuration information, advanced setting information, guest domain configuration information, etc.
- CPU Activation key, CPU Activation assignment, etc.
- PPAR operation mode, time zone setting, user information, etc.

The following example shows the command for saving the XSCF setting information on the USB device. For details, see "10.10 Saving/Restoring XSCF Settings Information" in the *Fujitsu SPARC M12 and Fujitsu M10/SPARC M10 System Operation and Administration Guide*.

```
XSCF> dumpconfig -v -V file:///media/usb_msd/backup-file.txt
```

5.6.2 Setting recovery mode

Perform the following procedure to enable recovery mode in a control domain.

1. **Log in to Oracle Solaris on the control domain.**
2. **Use the svccfg command to confirm that recovery mode is enabled.**

```
primary# svccfg -s ldmd listprop ldmd/recovery_mode
```

If recovery mode is enabled, the command displays the following.

```
ldmd/recovery_mode astring     auto
```

3. **If recovery mode is not enabled, use the svccfg command and svcadm command to enable recovery mode.**

```
primary# svccfg -s ldmd setprop ldmd/recovery_mode = astring: auto
primary# svcadm refresh ldmd
```

5.6.3 Saving the logical domain configuration information and OpenBoot PROM environment variables

You can save the configuration information of the logical domains by physical partition in an XML file. If you save the configuration information of the logical domains in an XML file, log in to the control domain of the physical partition and perform the work.

The following shows the procedure for saving the configuration information of the logical domains.

1. **Switch to the control domain console of the target physical partition from the XSCF shell.**
2. **Execute the ldm ls-spconfig command to confirm that the current configuration information of the logical domains was already saved in the XSCF.**
   In the following example, the current configuration information is set in test1.

```
primary# ldm ls-spconfig
factory-default
test1 [current]
test2
```

If the current configuration information is not saved in XSCF, execute the ldm add-spconfig command to save it.

In the following example, the configuration information is saved in test3 by the ldm add-spconfig command, and the ldm ls-spconfig command is used to confirm that the information is set in test3.

```
primary# ldm add-spconfig test3
primary# ldm ls-spconfig
factory-default
test1
test2
```

```
test3 [current]
```

3. **Execute ldm list-constraints -x to save the configuration information of the logical domains in an XML file.**
   This shows an example of saving it in /ldm-set1.xml.

```
primary# ldm list-constraints -x > /ldm-set1.xml
```

4. **Execute the more command or a command with a similar function to confirm that the configuration information is saved in an XML file.**

```
primary# more /ldm-set1.xml
<?xml version="1.0"?>
<LDM_interfaceversion="1.3" xmlns:xsi=http://www.w3.org/2001/XMLSchema-
instancce>
```

   To be prepared in case the saved file is lost, back up the file in another medium, etc.

5. **If the SR-IOV function was used to assign a virtual function (VF) to a domain, execute ldm list-io -l to record the following information that has been set for each VF:**
   - For a Fibre Channel HBA: port-wwn and node-wwn information that was set when the VF was created
   - For an Ethernet interface: MAC address that was set when the VF was created

```
[Example]
primary# ldm list-io -l
NAME                                        TYPE   BUS      DOMAIN   STATUS
----                                        ----   ---      ------   ------
  :
/SYS/PCI0/IOVFC.PF0.VF0                     VF     PCIE0    XXXXX
[pci@8000/pci@4/pci@0/pci@8/SUNW,qlc@0,2]
Class properties [FIBRECHANNEL]
port-wwn = 10:00:00:14:4f:f8:38:99
node-wwn = 20:00:00:14:4f:f8:38:99
bw-percent = 0
  :
/SYS/PCI1/IOVNET.PF0.VF0                    VF     PCIE1    XXXXX
[pci@8100/pci@4/pci@0/pci@1/network@0,80]
Class properties [NETWORK]
mac-addr = 00:14:4f:f8:b2:73
mtu = 1500
  :
```

6. **Stop the logical domains and put them in the OpenBoot PROM state.**
   Before powering off the system, stop the logical domains by following an appropriate procedure and perform the ldm unbind command to put them in inactive state.

```
primary# shutdown -i0 -g0 -y
```

7. **Execute the printenv command to confirm the OpenBoot PROM environment variables, and save the output data.**
   If there is any item omitted with "...", check the item again.

```
{0} ok printenv boot-device
boot-device = /pci@8000/pci@4/pci@0/pci@0/scsi@0/disk@p0,0
```

5.7 Releasing an FRU from the System with the replacefru Command

This section describes the procedure for releasing an FRU requiring maintenance from the system. The following FRUs can be maintained.

- Power supply unit
- Fan unit

Note - If the XSCF startup mode is high-speed mode, hardware cannot be replaced using the replacefru command. Replace hardware with the input power turned off.

---

1. **Log in to the XSCF shell.**
2. **Execute the replacefru command to display the maintenance menu.**

```
XSCF> replacefru
```

3. **Select the FRU requiring maintenance by specifying it with a numeric key.**
   In the following example, since the fan unit is selected, "1" is entered.

```
-------------------------------------------------------------------------------
Maintenance/Replacement Menu
Please select a type of model which has FRU to be replaced.

1. FAN        (Fan Unit)
2. PSU        (Power Supply Unit)
-------------------------------------------------------------------------------
Select [1,2|c:cancel] :1
```

4. **Select the FRU requiring maintenance by specifying it with a numeric key.**
   In the following example, since FAN#6 is showing "Faulted" indicating an error, "7" is entered.

```
------------------------------------------------------------------------------
Maintenance/Replacement Menu
Please select a FRU to be replaced.

No. FRU                  Status
--- -------------------- --------------
 1  /FAN#0               Normal
 2  /FAN#1               Normal
 3  /FAN#2               Normal
 4  /FAN#3               Normal
 5  /FAN#4               Normal
 6  /FAN#5               Normal
 7  /FAN#6               Faulted
------------------------------------------------------------------------------
Select [1-7|b:back] :7
```

5. **After confirming that the selected FRU is displayed, enter [r].**

```
You are about to replace FAN#6.
Do you want to continue?[r:replace|c:cancel] : r
```

6. **Confirm that the CHECK LED of the FRU is blinking.**
   For the CHECK LED location, see "2.4.3 LEDs on each component."

```
Please execute the following steps:
1) Confirm the Check LED is blinking.
2) Remove FAN#6.
3) Execute either the following:
  3-1) After installing the exchanged device, please select 'finish'.
  3-2) If you want to suspend the maintenance without exchanging device,
       please select 'cancel'.
[f:finish|c:cancel] :
```

You can now start FRU maintenance. Do not enter "f" until you complete the maintenance work.
After replacing the FRU, perform the work in "6.2 Incorporating an FRU into the System with the replacefru Command" to incorporate the FRU into the system.

5.8 Accessing an FRU

This section describes the operations to be performed before accessing the FRU requiring maintenance. The required operations vary depending on the FRU requiring maintenance.

5.8.1 Removing the power cords

Remove the cable clamp from each power cord, and then remove the power cords.

1. **Release the latch (A in Figure 5-1) of the cable clamp.**
   Pulling the cable clamp toward the rear of the chassis facilitates the release of the latch.

Figure 5-1 Releasing the cable clamp

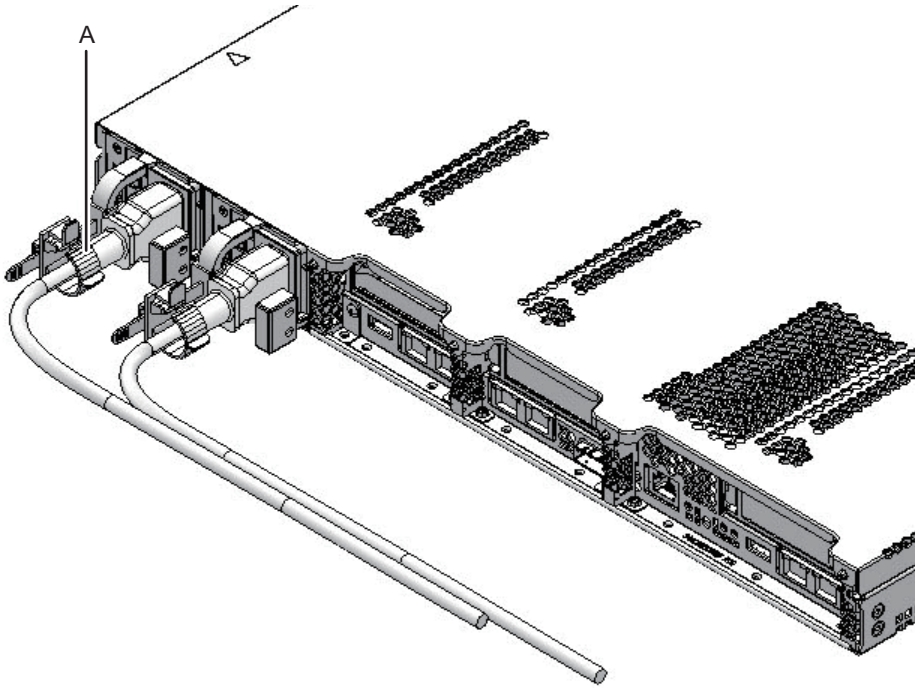

2. **Remove the power cords from the power supply unit.**

Figure 5-2 Removing the power cords

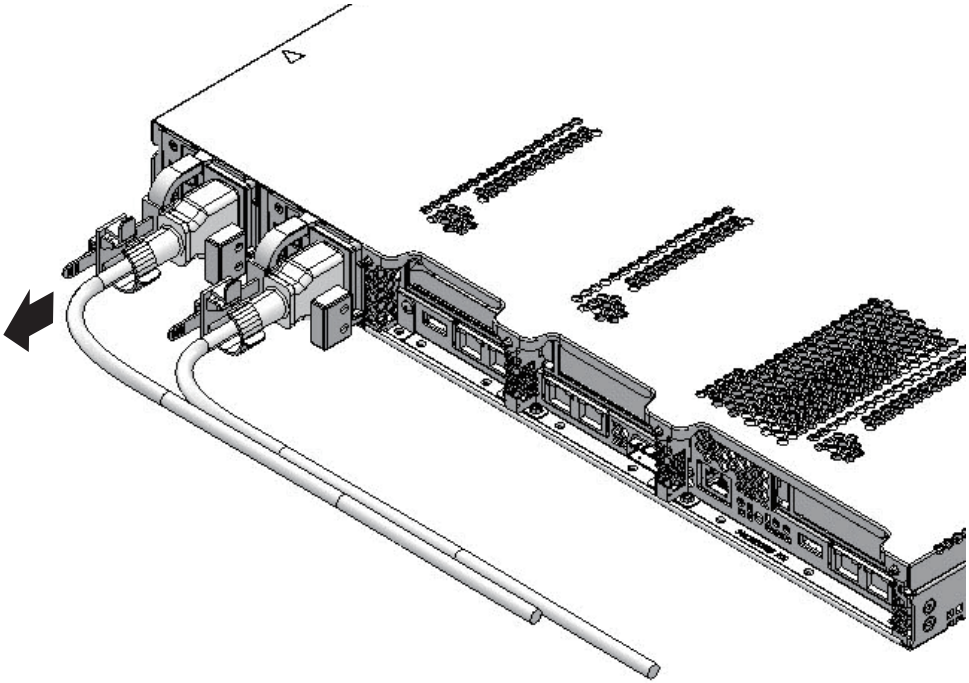

5.8.2 Removing the cables

- **When maintaining a PCIe card**
  Disconnect all the cables connected to the PCIe card requiring maintenance.
- **When maintaining a motherboard unit, memory, or PSU backplane**
  Remove all the cables connected to the external interface on the rear of the device.

Note - Record the positions of the cables before removing them to ensure that they are reinstalled correctly.

5.8.3 Pulling the chassis out from the rack

To perform maintenance on an internal FRU in a chassis, pull the chassis out of the rack.

Caution - If the rack is supplied with a quakeresistant options kit, install it. The quakeresistant options kit will prevent the rack from falling over when pulling the chassis out along the slide rail when performing maintenance.

---

1. **Pull the levers on the right and left side of the chassis outward to release the lock holding the chassis.**

Figure 5-3 Levers on the right and left sides

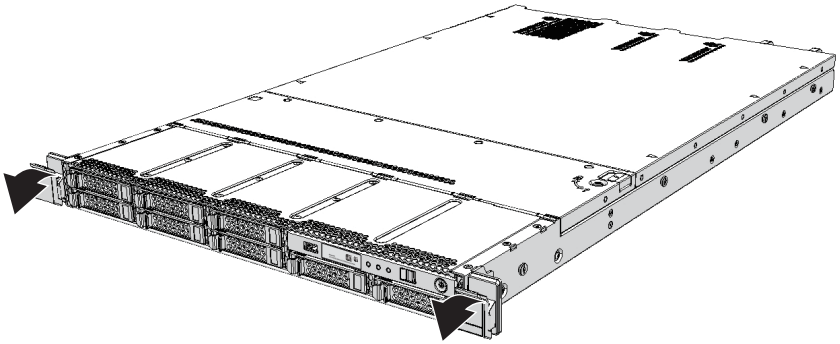

2. **While pulling the levers outward, pull the chassis out as far as possible.**
   Once the chassis has been completely pulled out, it is automatically locked into the prescribed position.

Figure 5-4 Pulling out the chassis

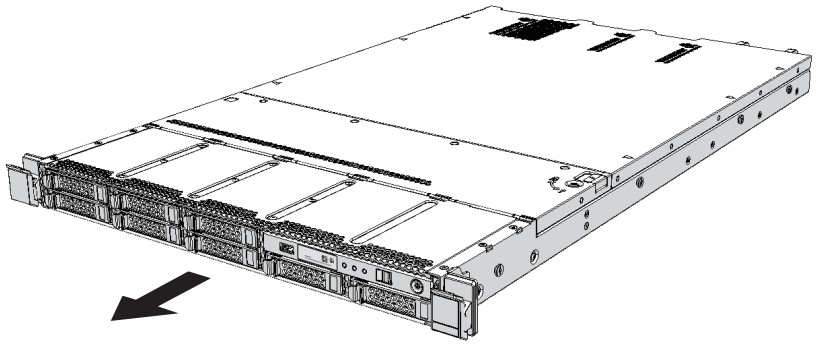

5.8.4 Opening the fan cover

To perform maintenance on an internal FRU in a chassis, pull the chassis out of the rack, and then open the fan cover.

1. **Turn the locking screw to the Service position ( ) to release the lock.**

Figure 5-5 Releasing the lock

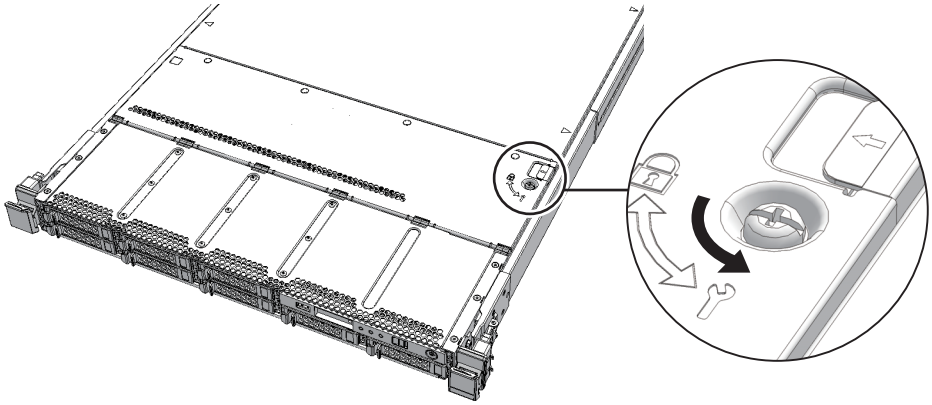

2. **While pressing the green slide button (A in Figure 5-6) toward the inside of the chassis, hold the edge of the fan cover and open it in the direction of the arrows.**

Note - The fan cover does not open through 180 degrees.

Figure 5-6 Opening the fan cover

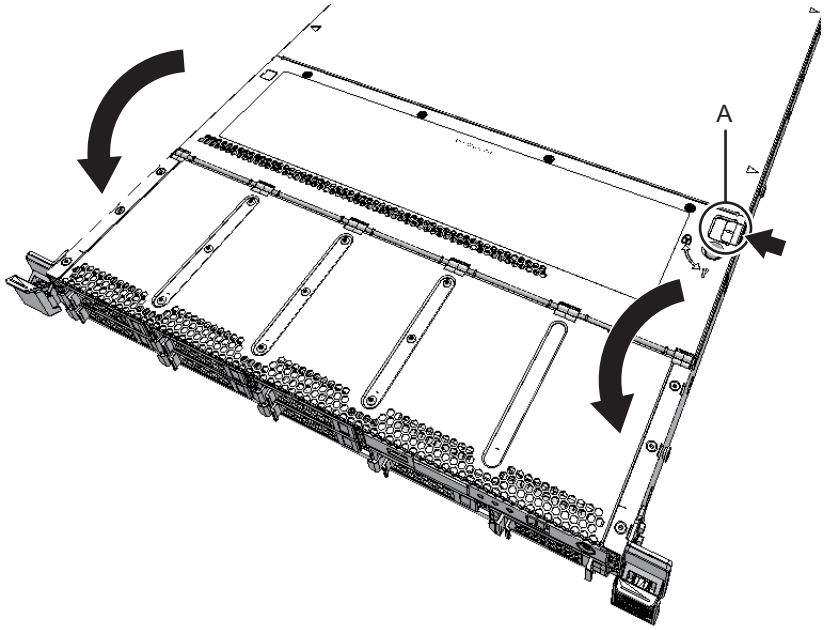

5.8.5 Removing the upper cover

To perform maintenance on an internal FRU in a chassis, pull the chassis out of the rack, open the fan cover, and then remove the upper cover.

1. **Slide the upper cover toward the rear of the chassis to remove it.**

Figure 5-7 Opening the upper cover

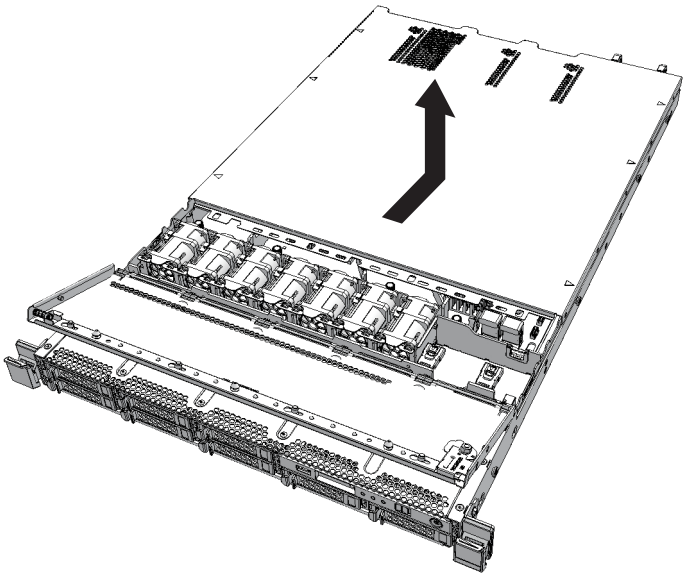

5.8.6 Removing the air duct and PSU backplane cover

To perform maintenance on the motherboard unit, memory, or PSU backplane, remove the air duct and PSU backplane cover.

1. **Lift the air duct up by both sides to remove it.**

Figure 5-8 Removing the air duct

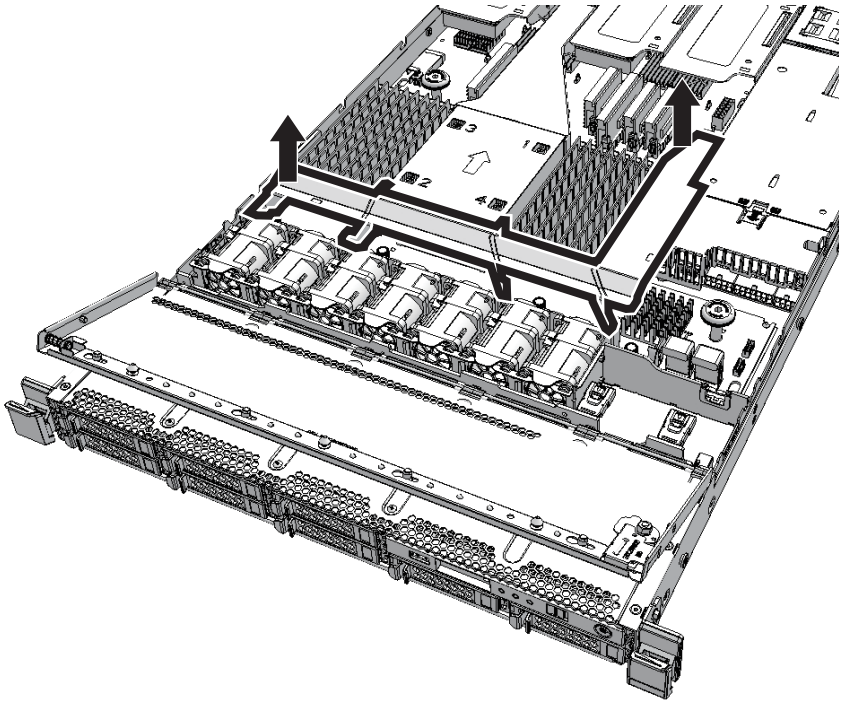

2. **Remove the PSU backplane cover by sliding it to the front of the chassis while pressing the latch of the PSU backplane cover.**

Figure 5-9 Removing the PSU backplane cover

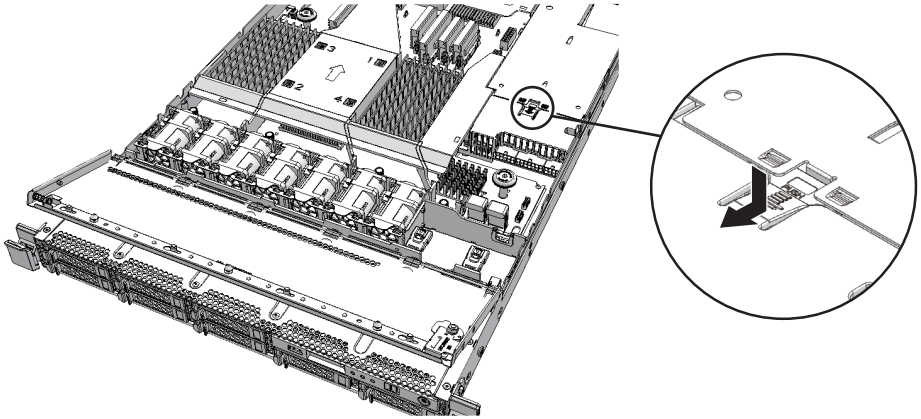

5.8.7 Releasing the cable guide lock

To perform maintenance by removing the cables connected to the motherboard unit, remove the cables by releasing the cable guide lock.
There are the following two types of cable guides. Type B cable guide has a lock that is released.

Figure 5-10 Types of cable guides

Type A

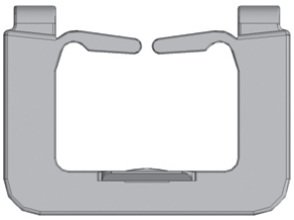

Type B

Type	How to remove the cables
Type A	Remove the cables from the cable guide by pulling them up.
Type B	Release the cable guide lock and remove the cables from the guide.

1. **Release the cable guide lock by pressing the lock toward the inside of the chassis (A in Figure 5-11).**

Figure 5-11 Releasing the cable guide lock

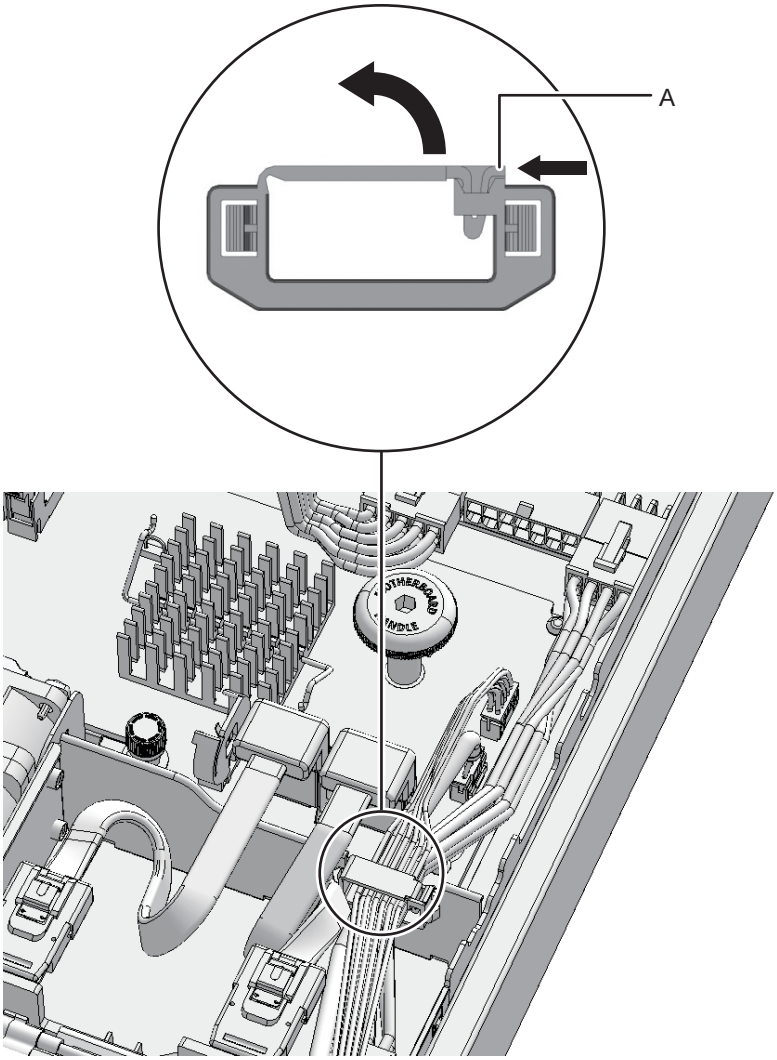

Chapter 6

Understanding the Preparations for Restoring the System

This chapter describes the procedures required to restore the system after FRU maintenance. See this chapter, as required, when performing maintenance on each FRU described in Chapter 8 onward.

6.1 Restoring the Chassis

This section explains how to restore the chassis. If the maintenance has been done by pulling the chassis out of the rack, restoration of the chassis is required.

6.1.1 Locking the cable guide

If the maintenance has been done by removing the cables connected to the motherboard unit, lock the cable guide after storing the cables in it.
There are the following two types of cable guides. Type B cable guide is locked.

Figure 6-1 Types of cable guides

Type A

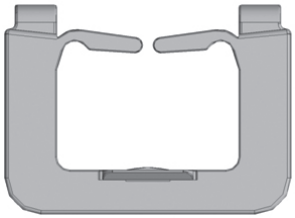

Type B

Type	How to store the cables
Type A	Working from the upper part of the cable guide, store the cables in the guide by pushing them down.
Type B	Store the cables in the cable guide and lock it.

1. **Lock the cable guide after storing the connected cables in the guide.**

Figure 6-2 Locking the cable guide

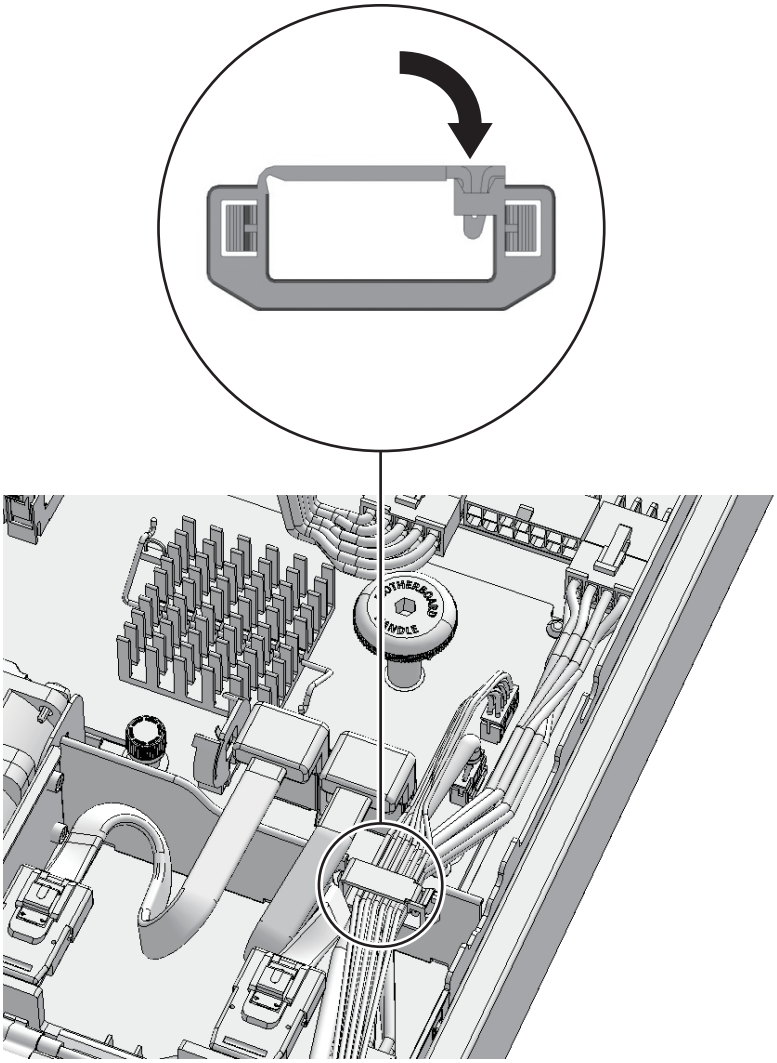

6.1.2 Installing the air duct and PSU backplane cover

If maintenance was performed on the motherboard unit, memory, or PSU backplane, install the air duct and PSU backplane cover.

1. **Install the PSU backplane cover by tilting it, inserting the latch (A in Figure 6-3), and sliding the cover to the rear of the chassis.**

Note - Check that the latch of the PSU backplane cover is secured.

Figure 6-3 Installing the PSU backplane cover

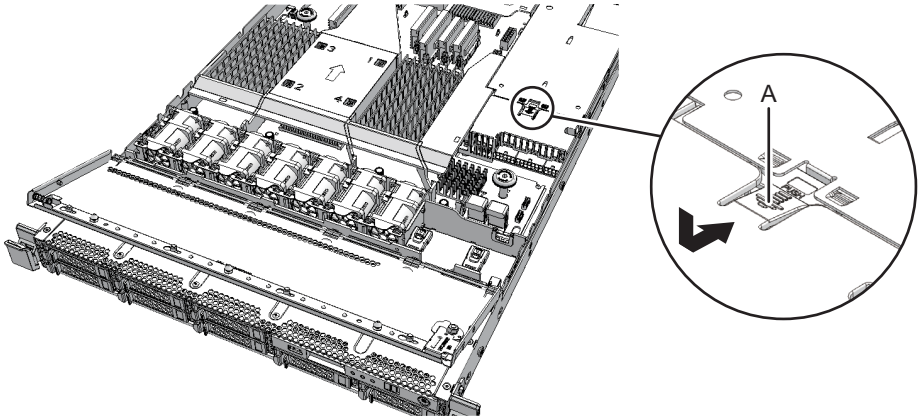

2. **Attach the air duct vertically.**
   Fit the air duct guides (four locations) (A in Figure 6-4) into the notches on the motherboard unit, and then fix them with the pins (two locations) (B in Figure 6-4).

Figure 6-4 Installing the air duct

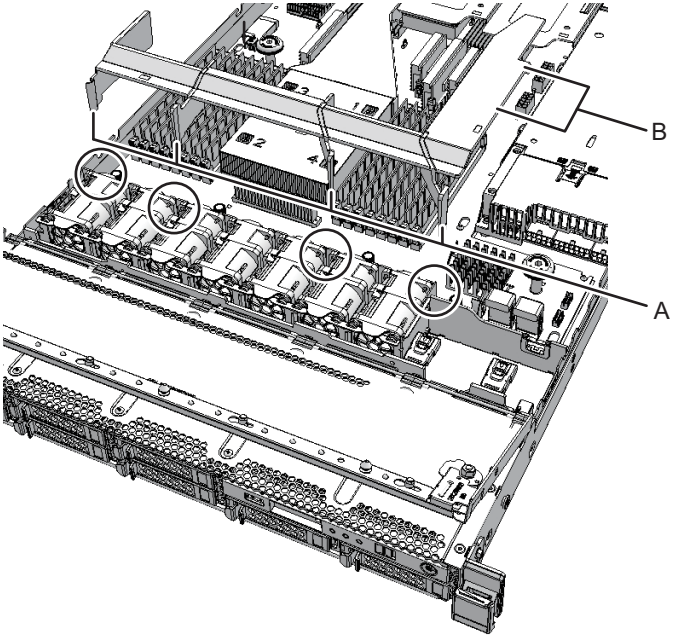

6.1.3 Installing the upper cover

If the maintenance was performed on an internal FRU in the chassis, install the upper cover.

1. **Install the upper cover by sliding it toward the front of the chassis.**

Note - Check that the pins on the rear of the chassis (four positions) are inserted into the upper cover.

Figure 6-5 Installing the upper cover

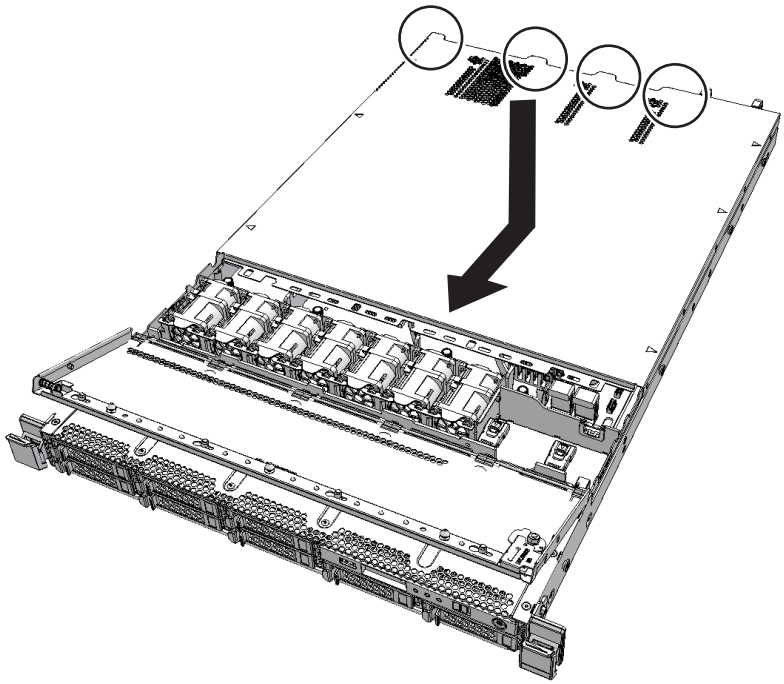

6.1.4 Closing the fan cover

If the maintenance was performed on an internal FRU in the chassis, install the upper cover, and then close the fan cover.

1. **Hold the edge of the fan cover, and close it while pressing the green slide button toward the inside of the chassis.**

Note - Check that the fan cover is firmly closed and secured.

Figure 6-6 Fan cover

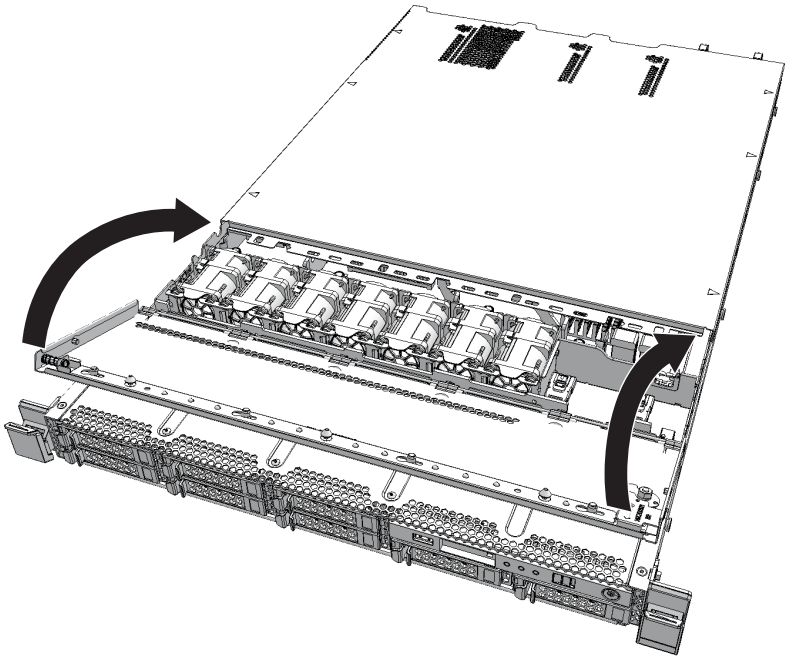

2. **Turn the locking screw to the Locked position (🔒) to lock.**

Figure 6-7 Fixing with the locking screw

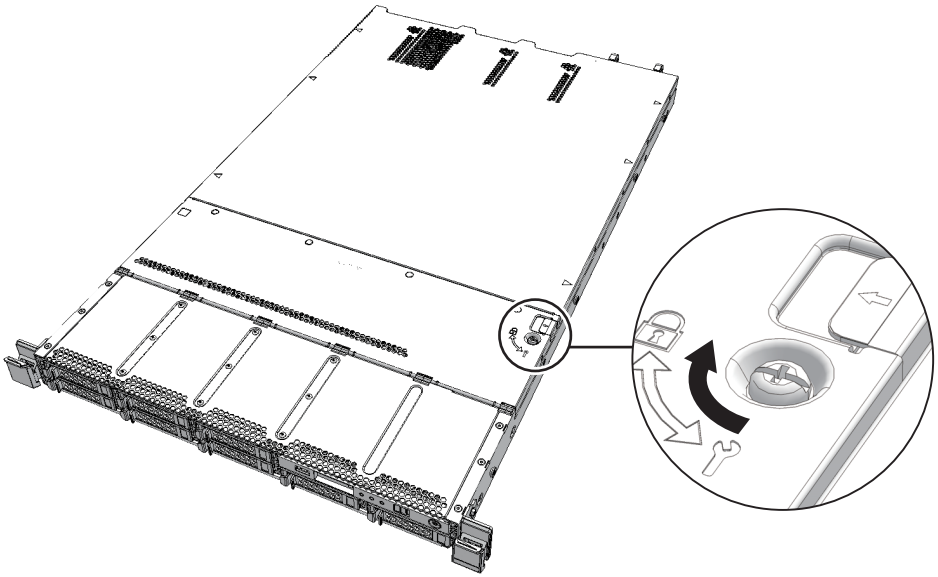

6.1.5 Putting the chassis into the rack

If the maintenance was performed on an internal FRU in the chassis, install the upper cover, close the fan cover, and then put the chassis back into the rack.

1. **Carefully push the chassis all the way into the rack.**

Note - Check that the chassis is securely mounted and that all the levers are locked.

Figure 6-8 Levers on chassis

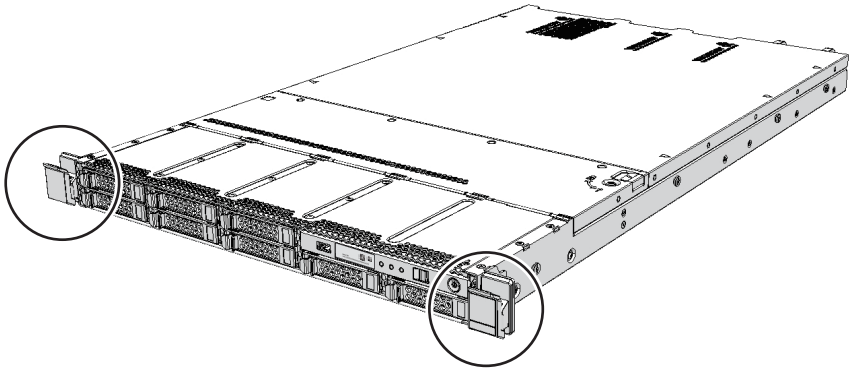

6.1.6 Installing the power cords

If the power cord has been removed for maintenance, reinstall the power cord, and then replace the cable clamp.

Note - In the case of a dual power feed, connect the power cords in their original positions by referring to the record that you made before the start of maintenance.

---

1. **Insert the power cord all the way straight into the power supply unit**

Figure 6-9 Installing the power cord

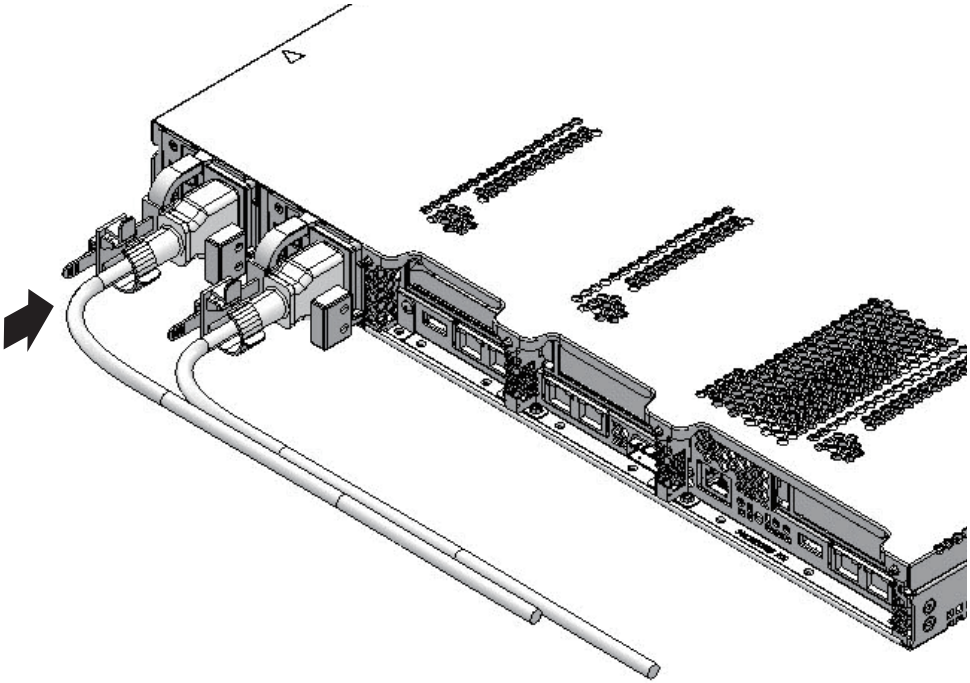

2. **Clip the power cords with the cable clamp, and secure the cable clamp.**
   Lock the latch (A in Figure 6-10) and then push the cable clamp toward the front of the chassis to firmly secure the cable clamp.

Figure 6-10 Locking the cable clamp

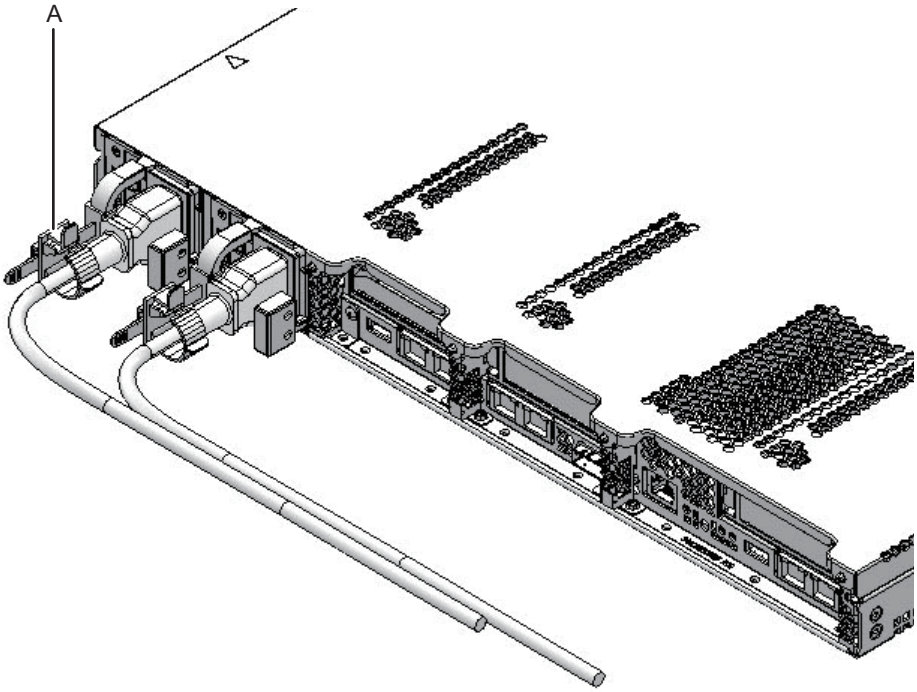

3. **If you have unlocked and released the cable management arm, restore it to its original state.**

Note - Confirm that the cable management arm is locked with its tab (A in Figure 6-11).

Figure 6-11 Cable management arm tab

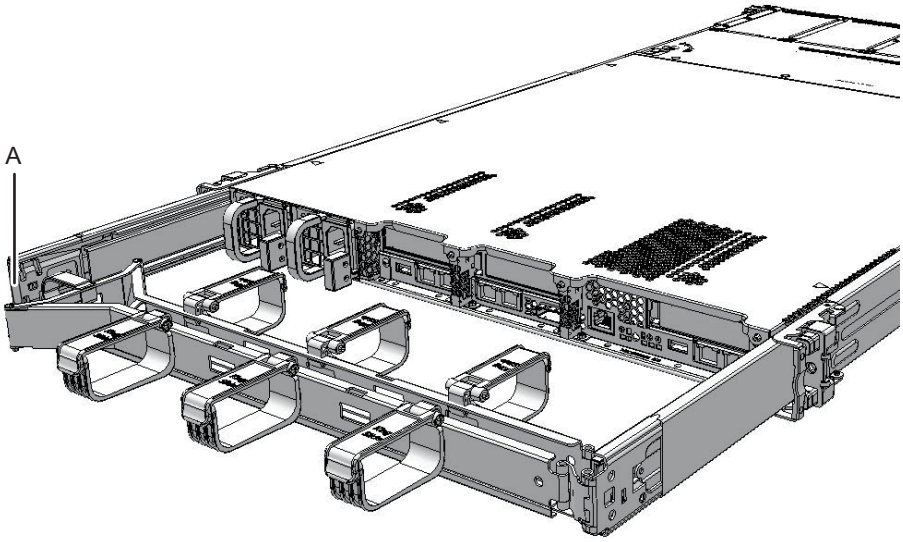

6.2 Incorporating an FRU into the System with the replacefru Command

This section describes the procedure for incorporating a Field Replaceable Unit (FRU) into the system after maintenance. To do this, resume the replacefru command, which is running, to incorporate the FRU into the system. The following FRUs can be maintained.

- Power supply unit
- Fan unit

1. **After performing maintenance on the FRU, return to the operation of the XSCF firmware replacefru command, and then enter "f".**

```
Please execute the following steps:
1) Confirm the Check LED is blinking.
2) Remove FAN#6.
3) Execute either the following:
  3-1) After installing the exchanged device, please select 'finish'.
  3-2) If you want to suspend the maintenance without exchanging device,
       please select 'cancel'.
[f:finish|c:cancel] :f
```

The following screen is displayed. Wait until the processing has completed.

```
Waiting for FAN#6 to enter install state.
[This operation may take up to 1 minute(s)]
(progress scale reported in seconds)
   0.. done

Diagnostic tests for FAN#6 have started.
[This operation may take up to 6 minute(s) 30 second(s)]
(progress scale reported in seconds)
   0....  30.....  60.....  90. done
```

If your XSCF firmware version is earlier than XCP 2220, the underlined part is displayed as "4 minute(s)."

2. **Confirm that the status is normal ("Normal") after diagnosis, and then enter "f".**

```
--------------------------------------------------------------------------
Maintenance/Replacement Menu
Status of the replaced FRU.

FRU                 Status
------------------- --------------
/FAN#6              Normal
--------------------------------------------------------------------------
The replacement of FAN#6 has completed normally.[f:finish] :f
```

3. **When the maintenance menu appears, enter "c" to exit the operation.**

```
--------------------------------------------------------------------------
Maintenance/Replacement Menu
Please select a type of model which has FRU to be replaced.

1. FAN        (Fan Unit)
2. PSU        (Power Supply Unit)
--------------------------------------------------------------------------
Select [1,2|c:cancel] :c
```

6.3 After Replacing the Motherboard Unit/PSU Backplane

This section describes the procedure for restoring the system after reinstalling the motherboard unit or PSU backplane.

6.3.1 Setting the time

1. **Check that the XSCF STANDBY LED on the operation panel is on.**
2. **Log in to the XSCF shell.**
3. **Execute the showdate command to display the XSCF time.**
   In the following example, the current local time is displayed.

```
XSCF> showdate
Mon Jan 1 09:17:24 JST 2001
```

4. **Execute the setdate command to set the XSCF time.**
   Specify the time in either of the following formats:

   yyyy.MM.DD-hh:mm:ss year.month.day-hour (24-hour clock):minute:second

   MMDDhhmmyyyy.ss monthdayhour (24-hour clock) minuteyear.second

   In the following example, "October 20, 2013 16:59:00" is specified.

```
XSCF> setdate -s 102016592013.00
```

6.3.2 Confirming the firmware version

1. **Log in to the XSCF shell.**
2. **Execute the version command to confirm the firmware version information.**
   If the XCP firmware version does not match that used before the replacement, update the firmware.

   For details, see "16.5 Updating Firmware" in the *Fujitsu SPARC M12 and Fujitsu M10/SPARC M10 System Operation and Administration Guide*.

   If you replace the microSD card, the CMU firmware versions do not match. However, you do not need to perform an update.

   The following example shows "02.01.0001" (*1 in the execution example) as the CMU firmware version of the current XCP, and "02.00.0006" (*2 in the execution example) as the CMU firmware version of the reserve XCP. Thus, you can see that the CMU firmware versions do not match.

```
XSCF> version -c xcp -v
BB#00-XSCF#0 (Master)
XCP0 (Current): 2011
CMU           : 02.01.0001 (*1)
```

```
    POST          : 1.20.0
    OpenBoot PROM : 4.34.0+1.2.0
    Hypervisor    : 0.21.11
XSCF          : 02.01.0001
XCP1 (Reserve): 2011
CMU           : 02.00.0006 (*2)
    POST          : 1.13.0
    OpenBoot PROM : 4.34.0+1.0.5
    Hypervisor    : 0.21.3
XSCF          : 02.01.0001
CMU BACKUP
#0: 02.01.0001
#1: ..
XSCF>
```

6.3.3 When the system is configured with a hardware RAID

If you have replaced the motherboard unit in a hardware RAID configuration, activate the RAID volume.

1. **Log in to the XSCF shell.**
2. **Execute the setpparparam command to suppress auto-boot.**

```
XSCF> setpparparam -p 0 -s bootscript "setenv auto-boot false"
```

3. **Start the system.**
   For details, see "6.9 Starting the System."
4. **The ok prompt appears.**
5. **Enable the RAID volume to check the status.**
   For details, see "14.2.11 Re-enabling a Hardware RAID Volume" in the *Fujitsu SPARC M12 and Fujitsu M10/SPARC M10 System Operation and Administration Guide*.
6. **Stop the system after returning the Auto boot setting to the original one.**

```
{0} ok setenv auto-boot? true
XSCF> poweroff -a
```

6.4 Diagnosing a Replacement FRU

This section describes the diagnosis function for checking whether a replacement

FRU is operating normally. For details on the command, see the *Fujitsu SPARC M12 and Fujitsu M10/SPARC M10 XSCF Reference Manual* for the XCP firmware version being used.

1. **Log in to the XSCF shell.**
2. **Execute the testsb command.**

   The testsb command is used to perform an initial diagnosis of the specified physical system board (PSB). The PSB is powered on and off during the diagnosis. You can check the mounting of HDDs, SSDs, and PCI cards by specifying options.

   In the following example, an initial diagnosis of a PSB and a check of the connected I/O are performed.

   <Description of options>

   -v: Additionally displays a detailed message from the initial diagnosis.

   -p: During diagnosis processing, executes the "probe-scsi-all" command of the OpenBoot PROM and displays the result.

   -s: During diagnosis processing, executes the "show-devs" command of the OpenBoot PROM and displays the result.

   -a: Diagnoses all the mounted PSBs.

```
XSCF> testsb -v -p -s -a -y
Initial diagnosis is about to start, Continue?[y|n] :y
PSB power on sequence started.
POST Sequence 01 Banner
LSB#00: POST 3.7.0 (2014/01/30 16:51)
:

<<Displayed execution results of "probe-scsi-all">>
/pci@8000/pci@4/pci@0/pci@0/scsi@0

FCode Version 1.00.56, MPT Version 2.00, Firmware Version 13.00.66.00

Target a
  Unit 0   Disk   TOSHIBA  MBF2600RC        3706    1172123568 Blocks, 600 GB
  SASDeviceName 50000394281b6190  SASAddress 50000394281b6192  PhyNum 0
Target d
  Unit 0   Disk   TOSHIBA  MBF2600RC        3706    1172123568 Blocks, 600 GB
  SASDeviceName 50000394281b5a44  SASAddress 50000394281b5a46  PhyNum 1

<<Displayed execution results of "show-devs">>
/pci@8100/pci@4
/pci@8100/pci@4/pci@0
/pci@8100/pci@4/pci@0/pci@9
/pci@8100/pci@4/pci@0/pci@1
/pci@8100/pci@4/pci@0/pci@0
/pci@8100/pci@4/pci@0/pci@0/network@0,1
/pci@8100/pci@4/pci@0/pci@0/network@0
:
```

```
PSB Test Fault
---- ------- --------
00-0 Passed Normal

XSCF>
```

3. **From the execution result of "probe-scsi-all", confirm that the mounted internal disks are recognized.**
4. **From the execution result of "show-devs", confirm that the mounted PCIe cards are recognized.**
5. **From the execution result of the initial diagnosis, confirm that "Passed" and "Normal" are displayed for all the PSBs.**

6.5 Restoring Setting Information and Configuration Information

6.5.1 Restoring XSCF setting information

This section describes how to restore the XSCF setting information saved to the USB device in "5.6.1 Saving XSCF setting information."

1. **Log in to the XSCF shell.**
2. **Execute the restoreconfig command to restore the XSCF setting information.**

```
XSCF> restoreconfig -V file:///media/usb_msd/backup-file.txt
```

For details, see "10.10 Saving/Restoring XSCF Settings Information" in the *Fujitsu SPARC M12 and Fujitsu M10/SPARC M10 System Operation and Administration Guide*.

6.5.2 Confirming that the logical domain configuration is the same as that before memory was installed

This section describes the procedure for checking whether the amount of assigned memory is the same as that recorded as described in "5.3.2 Checking the assignment status of I/O devices."

1. **Log in to the control domain.**
2. **Execute the ldm list-domain command, and confirm that the operating conditions of logical domains and the amount of memory assigned to each logical domain are the same as those before memory was installed.**

```
primary# ldm list-domain
```

3. **If you need to disable recovery mode, disable it.**
   a. Use the svccfg command and svcadm command to disable recovery mode.

```
primary# svccfg -s ldmd setprop ldmd/recovery_mode = astring: never
primary# svcadm refresh ldmd
```

   b. Confirm that recovery mode is disabled.

```
primary# svccfg -s ldmd listprop ldmd/recovery_mode
ldmd/recovery_mode astring     never
```

6.5.3 Restoring the logical domain configuration information and OpenBoot PROM environment variables

Reflect the setting of the XML file saved in "5.6.3 Saving the logical domain configuration information and OpenBoot PROM environment variables," and execute the shutdown command and restart the control domain.

The following shows the procedure for restoring the saved configuration information of the logical domains.

1. **Confirm that the current logical domain configuration is factory-default.**

```
primary# ldm list-config | grep "factory-default"
factory-default [current]
```

   If [current] does not appear beside "factory-default," the current logical domain configuration is not factory-default. In such a case, follow the procedure below to change the current logical domain configuration to factory-default.

   a. Execute the ldm set-spconfig command with "factory-default" specified.

```
primary# ldm set-spconfig factory-default
```

   b. Execute the poweroff command of the XSCF firmware and turn off the power to the physical partition.

```
XSCF> poweroff -p ppar_id
```

2. **The OpenBoot PROM environment variables are initialized. So, reset it to the original values.**

a. To stop in the OpenBoot PROM state, confirm "auto-boot?" out of the OpenBoot PROM environment variables.
If the value is "true", change it to "false".

```
XSCF> setpparparam -p 0 -s bootscript "setenv auto-boot? false"
PPAR-ID of PPARs that will be affected:0
OpenBoot PROM variable bootscript will be changed.
Continue? [y|n] :y
```

b. If you change the setting, confirm the OpenBoot PROM environment variables.

```
XSCF> showpparparam -p 0
use-nvramrc :-
security-mode :-
bootscript :
setenv auto-boot? false
```

c. Execute the poweron command to restart the physical partition.

```
XSCF> poweron -p 0
```

d. Execute the showdomainstatus command to check the status of the control domain.
Confirm that the status of the control domain is displayed as "OpenBoot Running" indicating that it is in the OpenBoot PROM state.

```
XSCF> showdomainstatus -p 0
Logical Domain Name   Status
primary               OpenBoot Running
```

e. Execute the console command to switch to the control domain console.

```
XSCF> console -p 0 -y
Console contents may be logged.
Connect to PPAR-ID 0?[y|n] :y
```

f. Restore the OpenBoot PROM environment variables based on the record saved in "5.6.3 Saving the logical domain configuration information and OpenBoot PROM environment variables."
The following example restores the boot-device to "/pci@8000/pci@4/pci@0/pci@0/scsi@0/disk@p0,0".

```
{0} ok setenv boot-device /pci@8000/pci@4/pci@0/pci@0/scsi@0/disk@p0,0
boot-device = /pci@8000/pci@4/pci@0/pci@0/scsi@0/disk@p0,0
{0} ok printenv boot-device
boot-device = /pci@8000/pci@4/pci@0/pci@0/scsi@0/disk@p0,0
```

The following example restores "auto-boot?" to "true."

```
{0} ok setenv auto-boot? true
auto-boot? = true
{0} ok printenv auto-boot?
auto-boot? = true
```

3. **Boot Oracle Solaris.**

```
{0} ok boot
```

4. **On Oracle Solaris super user prompt, confirm that the system started with factory-default.**

```
primary# ldm ls-spconfig
factory-default [current]
```

5. **Execute the ldm init-system command to reflect the setting in the saved XML file.**
   This is an example of restoring configuration information saved in /ldm-set1.xml.

```
primary# ldm init-system -i /ldm-set1.xml
Initiating a delayed reconfiguration operation on the primary domain.
All configuration changes for other domains are disabled until the primary
domain reboots, at which time the new configuration for the primary domain
will also take effect.
```

6. **Execute the shutdown command, and restart the control domain.**

```
primary# shutdown -y -g0 -i6
```

7. **Bind resources to a physical domain other than the control domain, and start the domain.**
   In the following example, the user binds resources to ldom1 and starts it.

```
primary# ldm bind ldom1
primary# ldm start ldom1
```

Note - If the virtual function (VF) is lent to the logical domains by using the SR-IOV function, the configuration of the virtual function may not be restored. Execute the ldm command to manually restore the virtual function that is not restored.

The following is an example.

```
primary# ldm create-vf /SYS/PCI1/IOVNET.PF0
primary# ldm add-io /SYS/PCI1/IOVNET.PF0.VF0 ldom1
```

8. **Execute the ldm add-spconfig command to save the configuration information of the logical domains.**
   To save configuration information under the same name, execute rm-config to delete it once and then save it.

6.6 Incorporating an Internal Disk

This section describes the procedure (workflow) for incorporating an internal disk by using the hot plug function.
To use the hot plug function, the hotplug service of Oracle Solaris needs to be enabled. Check the status of the service. If it is disabled, enable the hotplug service in the following procedure. The hot plug function is available only on the control domain and root domain.

```
# svcs hotplug ← If the STATE is disabled, enable the service.
# svcadm enable hotplug ← Enables the hotplug service.
```

For details on the cfgadm command used here, see "2 Dynamically Configuring Devices" in the *Managing Devices in Oracle Solaris 11.2* or "Dynamically Configuring Devices (Tasks)" in the *Oracle Solaris Administration: Devices and File Systems*.

1. **Log in as a super user to Oracle Solaris on the logical domain (control domain or root domain) into which the target internal disk is to be incorporated.**
2. **If the hotplug service is disabled for the logical domain (control domain or root domain) into which the target internal disk is to be incorporated, execute the svcadm enable command to enable the hotplug service.**

```
# svcadm enable hotplug
```

3. **Execute the cfgadm command to check the status of the incorporated internal disk.**
   With the cfgadm -al command, confirm that Ap_ID of the replacement internal disk has been changed.

   Confirm that Occupant shows "configured." If it does not show "configured," perform step 4.

```
# cfgadm -al
Ap_Id                          Type      Receptacle Occupant   Condition
 <Omitted>
c2                             scsi-sas  connected configured   unknown
c2::dsk/c2t50000394281B50C6d0 disk      connected configured   unknown
c2::es/ses0                    ESI       connected configured   unknown
```

```
c2::smp/expd0                  smp       connected configured   unknown
c3                             scsi-sas  connected unconfigured unknown
c4                             scsi-sas  connected unconfigured unknown
c5                             fc        connected unconfigured unknown
c6                             fc        connected unconfigured unknown
c7                             scsi-sas  connected unconfigured unknown
  <Omitted>
```

4. **If the system does not recognize the incorporated internal disk, make it recognized in the system.**
   a. Execute the cfgadm -c configure command to incorporate the target internal disk into the logical domain.

```
# cfgadm -c configure Ap_Id
```

   b. With the cfgadm -al command, check the status of the internal disk.

5. **If the CHECK LED on the mounted internal disk is not off, execute the cfgadm -x command to turn off the CHECK LED on that internal disk.**

```
# cfgadm -x led=fault,mode=off Ap_Id
```

6. **If you have enabled the hotplug service, execute the svcadm disable command to disable the hotplug service.**

```
# svcadm disable hotplug
```

7. **Assign the I/O device of the incorporated internal disk to the logical domain.**
   To configure the hardware RAID by adding a new internal disk, see "14.2 Configuring Hardware RAID" in the *Fujitsu SPARC M12 and Fujitsu M10/SPARC M10 System Operation and Administration Guide*.

6.7 Checking the FRU Status after Maintenance

This section describes the procedure for confirming that the FRU is operating normally after the completion of maintenance.

1. **Log in to the XSCF shell.**
2. **Execute the showstatus command.**
   Nothing is displayed in the normal state.

```
XSCF> showstatus
```

3. **Execute the showlogs error command.**
   Confirm that no new errors are displayed.

```
XSCF> showlogs error
```

4. **Execute the showhardconf command.**
   Confirm that no asterisk (*) is displayed in front of any FRU.

```
XSCF> showhardconf
SPARC M10-1;
    + Serial:2101151008A; Operator_Panel_Switch:Locked;
    + System_Power:Off; System_Phase:Cabinet Power Off;
    Partition#0 PPAR_Status:Powered Off;
    MBU Status:Normal; Ver:2004h; Serial:USDA-P00007 ;
        + FRU-Part-Number:CA20366-B10X 002AB/LGA-MBU -01 ;
        + Power_Supply_System: Dual ;
        + Memory_Size:32 GB; Type: A ;  (*1)
    CPU#0 Status:Normal; Ver:4142h; Serial: 00010448;
        + Freq:2.800 GHz; Type:0x10;    (*2)
        + Core:16; Strand:2;            (*3)
    MEM#00A Status:Normal;
        + Code:ce8002M393B5270DH0-YH9 0000-85A8EFD9;
        + Type:01; Size:4 GB;
------------------------Omitted------------------------
FANU#0 Status:Normal;
FANU#1 Status:Normal;
FANU#2 Status:Normal;
FANU#3 Status:Normal;
FANU#4 Status:Normal;
------------------------Omitted------------------------
```

*1 For an MBU on which the SPARC64 X+ processor is mounted, "Type: B" is displayed. For an MBU on which the SPARC64 X processor is mounted, "Type: A" is displayed.
*2 If the SPARC64 X+ processor is mounted, "2.800 GHz; Type:0x20", "3.200 GHz; Type:0x20", or "3.700 GHz; Type:0x20" is displayed.
If the SPARC64 X processor is mounted, "2.800 GHz; Type:0x10" is displayed.
*3 If the SPARC64 X+ (3.7 GHz (8 cores)) processor is mounted, "Core:8" is displayed.

6.8 Returning the Mode Switch to Locked Mode

1. **Return the mode switch of the operation panel to Locked mode.**
   For details, see "2.3.2 Control function of the operation panel."

6.9 Starting the System

This section explains the procedure for starting the system.
The system can be started in either of the following two ways:

- Starting the system with an XSCF command
- Starting the system from the operation panel

6.9.1 Starting the system with an XSCF command

1. **Check that the XSCF STANDBY LED on the operation panel is on.**
2. **Log in to the XSCF shell.**
3. **Execute the poweron command.**
   Enter "y" in response to the confirmation message.

```
XSCF> poweron -a
PPAR-IDs to power on:00
Continue? [y|n] :y
00 : Powering on
```

4. **Confirm that the POWER LED on the operation panel is on.**
5. **Execute the showpparstatus command to confirm that the power to the physical partition is turned on.**

```
XSCF> showpparstatus -p 0
PPAR-ID PPAR Status
00      Running
```

6. **Execute the fmadm faulty command on the logical domains where an error is detected to confirm that no errors remain.**

```
# fmadm faulty
```

   If any error remains, execute the fmadm repaired command to clear the error.

6.9.2 Starting the system from the operation panel

1. **Check that the XSCF STANDBY LED on the operation panel is on.**
2. **Press the power switch on the operation panel for 1 second or more (less than 4 seconds).**
   For details, see "2.3.2 Control function of the operation panel."

3. **Confirm that the POWER LED on the operation panel is on.**
4. **Log in to the XSCF shell.**
5. **Execute the showpparstatus command to confirm that the power to the physical partition is turned on.**

```
XSCF> showpparstatus -p 0
PPAR-ID PPAR Status
00      Running
```

6. **Execute the fmadm faulty command on the logical domains where an error is detected to confirm that no errors remain.**

```
# fmadm faulty
```

If any error remains, execute the fmadm repaired command to clear the error.

Chapter 7

Maintenance Flow

This chapter describes the maintenance workflow.

Be sure to check the notes on FRUs requiring maintenance in the *Fujitsu M10/SPARC M10 Systems Product Notes* for the latest XCP version.

- Maintenance Workflow
- FRU Replacement Workflow
- FRU Installation Workflow
- FRU Removal Workflow

7.1 Maintenance Workflow

Table 7-1 Maintenance workflow

Item	Procedure	Reference
1	Identifying the FRU to be replaced	"4.2.2 Identifying a failure"
2	Checking the available maintenance types (*1)	"Table 7-2 Maintenance types for FRUs"
3	Active maintenance	
3-a	Active replacement	"7.2.1 Active replacement"
3-b	Active addition	"7.3.1 Active addition"
3-c	Active removal	"7.4.1 Active removal"
4	System-stopped maintenance	
4-a	System-stopped replacement	"7.2.2 System-stopped replacement"
4-b	System-stopped addition	"7.3.2 System-stopped addition"

Table 7-1 Maintenance workflow *(continued)*

4-c	System-stopped removal	"7.4.2 System-stopped removal"

*1 The configuration of the system requiring maintenance and the FRU to be replaced may affect system operation, such as in maintenance time and in stopping the logical domains. Consult with the system administrator to decide the maintenance type to be used.

Table 7-2 Maintenance types for FRUs

-: Maintenance cannot be performed.

FRU	Active/hot maintenance	System-stopped (inactive)/hot maintenance	System-stopped (inactive)/cold maintenance	Reference
PCIe card	- (*1)	- (*1)	OK	Chapter 8
Internal disk	OK (*2)	OK	OK	Chapter 9
HDD backplane	-	-	OK	Chapter 10
Power supply unit	OK (*3)	OK (*3)	OK	Chapter 11
PSU backplane	-	-	OK	Chapter 12
Cable kit	-	-	OK	Chapter 13
Operation panel	-	-	OK	Chapter 14
Fan unit	OK	OK	OK	Chapter 15
Motherboard unit	-	-	OK	Chapter 16
Memory	-	-	OK	Chapter 16

*1 Active/hot maintenance and system-stopped (inactive)/hot maintenance can be performed on the PCIe cards mounted in the PCI expansion unit. For details, see "3.3 Types of Maintenance for the PCIe Card" in the *PCI Expansion Unit for Fujitsu SPARC M12 and Fujitsu M10/SPARC M10 Service Manual*.
*2 Supported only for the internal disks of devices other than a boot device. However, if the boot device has a redundant configuration (RAID configuration), active/hot maintenance can be performed on the internal disks of the boot device.
*3 If the XSCF startup mode is high-speed mode, hardware cannot be replaced using the replacefru command. Perform system-stopped (inactive)/cold maintenance.

7.2 FRU Replacement Workflow

This section describes the replacement workflow for the following FRUs of the SPARC M10-1:

- PCI Express card
- Motherboard unit
- Memory
- Internal disk
- Fan unit
- Power supply unit
- PSU backplane
- HDD backplane
- Operation panel
- Cable kit

7.2.1 Active replacement

This section describes the workflows for active/hot FRU replacement. References to detailed descriptions are written in the work procedure tables. See any of them as required.

Note - If the XSCF startup mode is high-speed mode, hardware cannot be replaced using the replacefru command. Replace hardware by performing system-stopped/cold replacement.

Active replacement on the SPARC M10-1 has the following patterns:

- Active/hot replacement (for a power supply unit or fan unit)
- Active/hot replacement (for an internal disk in a RAID configuration)
- Active/hot replacement (for an internal disk not in a RAID configuration)

Active/hot replacement (for a power supply unit or fan unit)

Active/hot replacement can be performed on a power supply unit/fan unit. Perform the following procedure to replace the unit.

Figure 7-1 Active/hot replacement flow (for a power supply unit or fan unit)

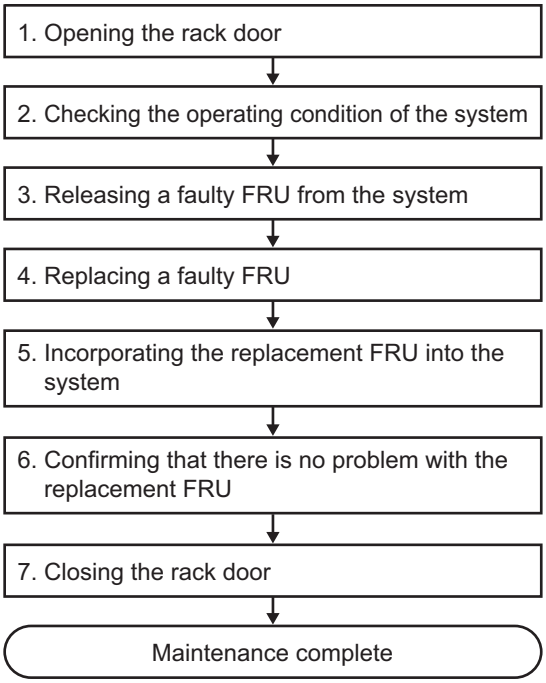

Table 7-3 Active/hot replacement work procedure (for a power supply unit or fan unit)

Item	Work procedure	Reference
1	Opening the rack door	
2	Checking the operating condition of the system	"5.3.1 Checking the operating condition of the physical partition or logical domain"
3	Releasing a faulty FRU from the system	"5.7 Releasing an FRU from the System with the replacefru Command"
4	Replacing a faulty FRU	"Chapter 11 Maintaining the Power Supply Units" "Chapter 15 Maintaining the Fan Units"
5	Incorporating the replacement FRU into the system	"6.2 Incorporating an FRU into the System with the replacefru Command"
6	Confirming that there is no problem with the replacement FRU	"6.7 Checking the FRU Status after Maintenance"
7	Closing the rack door	

Active/hot replacement (for an internal disk in a RAID configuration)

Active/hot replacement can be performed on an internal disk. If the internal disk is in a RAID configuration, perform the following procedure to replace it.

Figure 7-2 Active/hot replacement flow (for an internal disk in a RAID configuration)

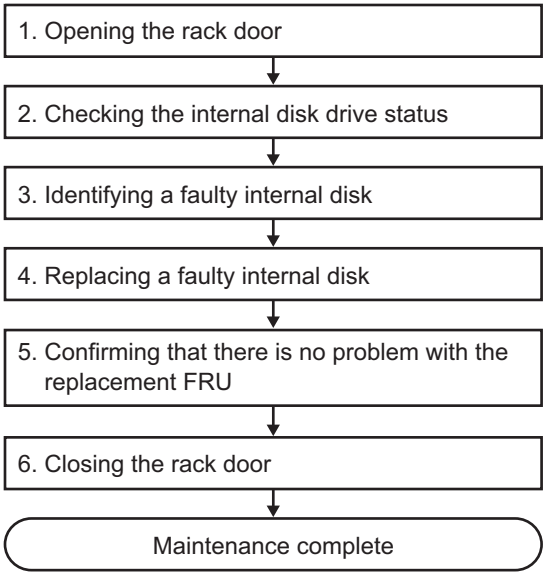

Table 7-4 Active/hot replacement work procedure (for an internal disk in a RAID configuration)

Item	Work procedure	Reference
1	Opening the rack door	
2	Checking the internal disk drive status	"14.2.8 Checking the Status of a Hardware RAID Volume and a Disk Drive" in the *Fujitsu SPARC M12 and Fujitsu M10/SPARC M10 System Operation and Administration Guide*
3	Identifying a faulty internal disk	"14.2.9 Checking for a Failed Disk Drive" in the *Fujitsu SPARC M12 and Fujitsu M10/SPARC M10 System Operation and Administration Guide*
4	Replacing a faulty internal disk	"14.2.10 Replacing a Failed Disk Drive" in the *Fujitsu SPARC M12 and Fujitsu M10/SPARC M10 System Operation and Administration Guide* "Chapter 9 Maintaining the Internal Disks"
5	Confirming that there is no problem with the replacement FRU	"6.7 Checking the FRU Status after Maintenance"
6	Closing the rack door	

Active/hot replacement (for an internal disk not in a RAID configuration)

Active/hot replacement can be performed on an internal disk. If the internal disk is not in a RAID configuration, perform the following procedure to replace it.

Figure 7-3 Active/hot replacement flow (for an internal disk not in a RAID configuration)

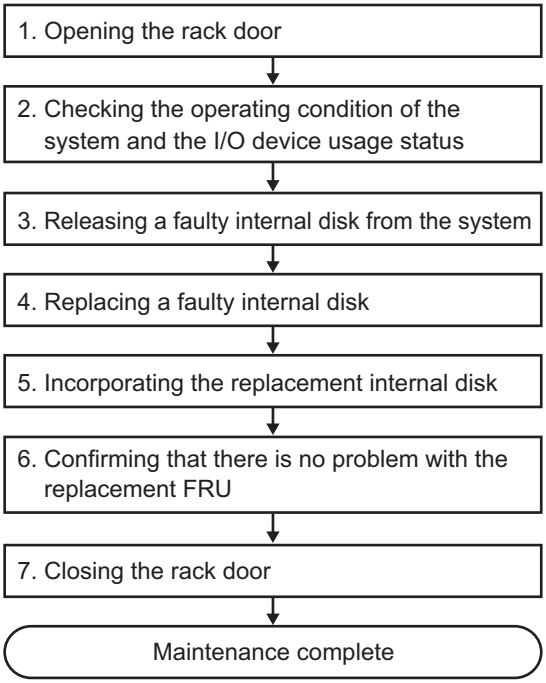

Table 7-5 Active/hot replacement work procedure (for an internal disk not in a RAID configuration)

Item	Work procedure	Reference
1	Opening the rack door	
2	Checking the operating condition of the system and the I/O device usage status	"5.3 Checking the Operating Condition and Resource Usage Status"
3	Releasing a faulty internal disk from the system	"5.4 Enabling the Removal of an Internal Disk"
4	Replacing a faulty internal disk	"Chapter 9 Maintaining the Internal Disks"
5	Incorporating the replacement internal disk	"6.6 Incorporating an Internal Disk"
6	Confirming that there is no problem with the replacement FRU	"6.7 Checking the FRU Status after Maintenance"
7	Closing the rack door	

7.2.2 System-stopped replacement

This section describes the workflows for system-stopped/hot and system-stopped/cold FRU replacement. References to detailed descriptions are written in the workflow. See any of them as required.

Note - If the XSCF startup mode is high-speed mode, hardware cannot be replaced using the replacefru command. Replace hardware by performing system-stopped/cold replacement.

System-stopped replacement on the SPARC M10-1 has the following patterns:

- System-stopped/hot replacement (for a power supply unit or fan unit)
- System-stopped/hot replacement (for an internal disk)
- System-stopped/cold replacement

System-stopped/hot replacement (for a power supply unit or fan unit)

System-stopped/hot replacement can be performed on a power supply unit/fan unit. Perform the following procedure to replace the unit.

Figure 7-4 System-stopped/hot replacement flow (for a power supply unit or fan unit)

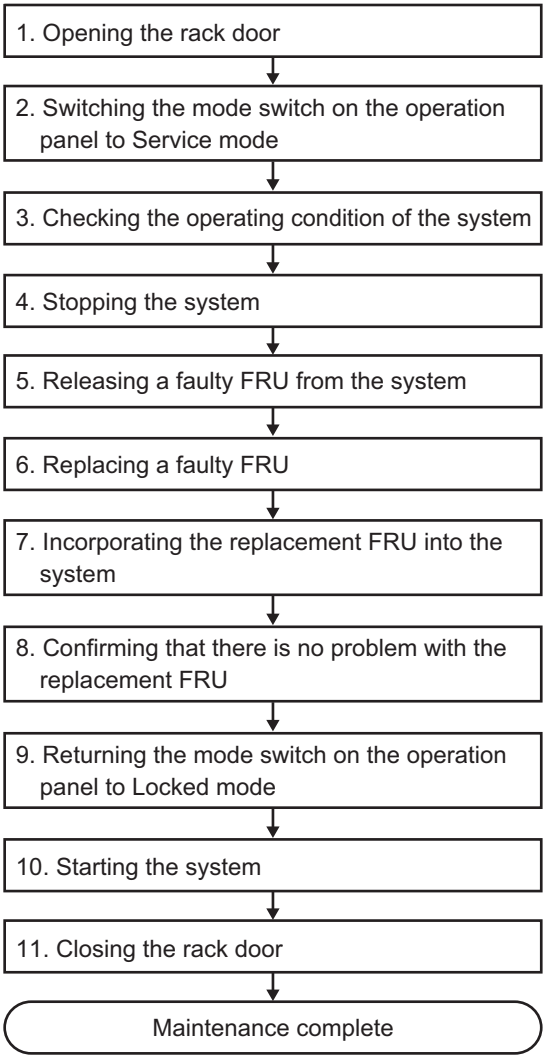

Table 7-6 System-stopped/hot replacement work procedure (for a power supply unit or fan unit)

Item	Work procedure	Reference
1	Opening the rack door	
2	Switching the mode switch on the operation panel to Service mode	"5.2 Switching the Mode Switch to Service Mode"
3	Checking the operating condition of the system	"5.3.1 Checking the operating condition of the physical partition or logical domain"
4	Stopping the system	"5.5 Stopping the Entire System"
5	Releasing a faulty FRU from the system	"5.7 Releasing an FRU from the System with the replacefru Command"
6	Replacing a faulty FRU	"Chapter 11 Maintaining the Power Supply Units" "Chapter 15 Maintaining the Fan Units"
7	Incorporating the replacement FRU into the system	"6.2 Incorporating an FRU into the System with the replacefru Command"
8	Confirming that there is no problem with the replacement FRU	"6.7 Checking the FRU Status after Maintenance"
9	Returning the mode switch on the operation panel to Locked mode	"6.8 Returning the Mode Switch to Locked Mode"
10	Starting the system	"6.9 Starting the System"
11	Closing the rack door	

System-stopped/hot replacement (for an internal disk)

System-stopped/hot replacement can be performed on an internal disk. Perform the following procedure to replace the unit.

Figure 7-5 System-stopped/hot replacement flow (for an internal disk)

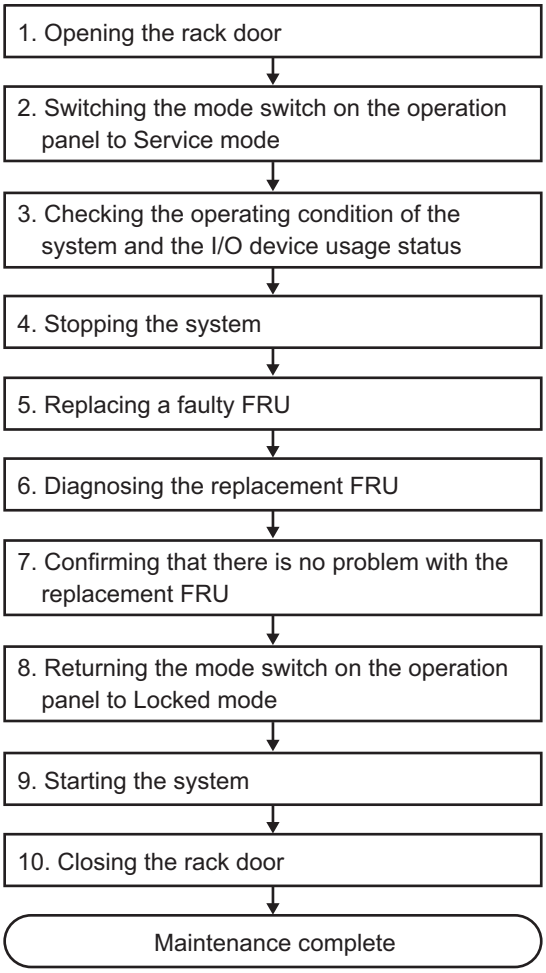

Table 7-7 System-stopped/hot replacement work procedure (for an internal disk)

Item	Work procedure	Reference
1	Opening the rack door	
2	Switching the mode switch on the operation panel to Service mode	"5.2 Switching the Mode Switch to Service Mode"
3	Checking the operating condition of the system and the I/O device usage status	"5.3 Checking the Operating Condition and Resource Usage Status"
4	Stopping the system	"5.5 Stopping the Entire System"
5	Replacing a faulty FRU	"Chapter 9 Maintaining the Internal Disks"
6	Diagnosing the replacement FRU	"6.4 Diagnosing a Replacement FRU"
7	Confirming that there is no problem with the replacement FRU	"6.7 Checking the FRU Status after Maintenance"
8	Returning the mode switch on the operation panel to Locked mode	"6.8 Returning the Mode Switch to Locked Mode"
9	Starting the system	"6.9 Starting the System"
10	Closing the rack door	

System-stopped/cold replacement

System-stopped/cold replacement can be performed on the following FRUs:

- PCI Express card
- Motherboard unit
- Memory
- Internal disk
- Fan unit
- Power supply unit
- PSU backplane
- HDD backplane
- Operation panel
- Cable kit

Perform the following procedure to replace the unit.

Figure 7-6 System-stopped/cold replacement flow

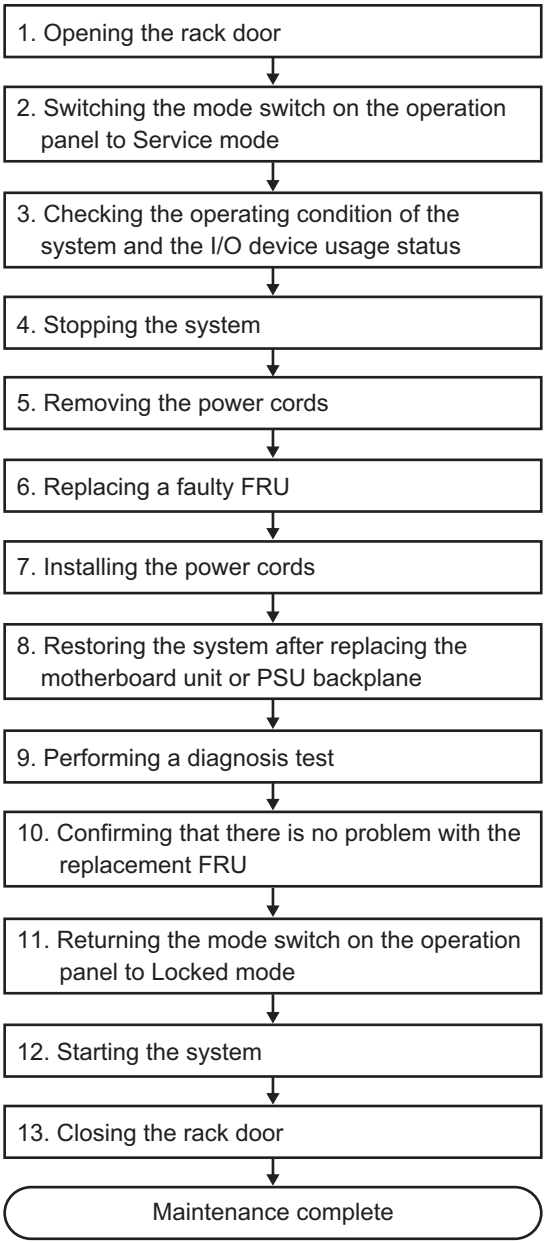

Table 7-8 Work procedure for system-stopped/cold replacement

Item	Work procedure	Reference
1	Opening the rack door	
2	Switching the mode switch on the operation panel to Service mode	"5.2 Switching the Mode Switch to Service Mode"
3	Checking the operating condition of the system and the I/O device usage status	"5.3 Checking the Operating Condition and Resource Usage Status"
4	Stopping the system	"5.5 Stopping the Entire System"
5	Removing the power cords	"5.8.1 Removing the power cords"
6	Replacing a faulty FRU	See the maintenance procedure for each FRU. "Chapter 8 Maintaining the PCI Express Cards" "Chapter 9 Maintaining the Internal Disks" "Chapter 10 Maintaining the HDD Backplane" "Chapter 11 Maintaining the Power Supply Units" "Chapter 12 Maintaining the PSU Backplane" (*1) "Chapter 13 Maintaining the Cable Kit" "Chapter 14 Maintaining the Operation Panel" "Chapter 15 Maintaining the Fan Units" "Chapter 16 Maintaining the Motherboard Unit/Memory" (*1)(*2)
7	Installing the power cords	"6.1.6 Installing the power cords"
8	Restoring the system after replacing the motherboard unit or PSU backplane	"6.3 After Replacing the Motherboard Unit/PSU Backplane" (*3)
9	Performing a diagnosis test	"6.4 Diagnosing a Replacement FRU"
10	Confirming that there is no problem with the replacement FRU	"6.7 Checking the FRU Status after Maintenance"
11	Returning the mode switch on the operation panel to Locked mode	"6.8 Returning the Mode Switch to Locked Mode"
12	Starting the system	"6.9 Starting the System"
13	Closing the rack door	

*1 Simultaneous replacement of the motherboard unit and PSU backplane is prohibited. To replace the motherboard unit and PSU backplane, first replace either of the units and perform the work up to "10. Confirming that there is no problem with the replacement FRU." Then, return to "6. Replacing a faulty FRU," and replace the other unit.
*2 If the motherboard unit is replaced in a system with a hardware RAID volume in a hardware RAID configuration using internal disks, you need to reactivate the hardware RAID volume before performing the work in "12. Starting the system." For details, see "14.2.11 Re-enabling a Hardware RAID Volume" in the *Fujitsu SPARC M12 and Fujitsu M10/SPARC M10 System Operation and Administration Guide*.
*3 For details, see "Notes on Maintenance of a CPU Memory Unit, Motherboard Unit, XSCF Unit, PSU Backplane, or Crossbar Backplane Unit" in the *Fujitsu M10/SPARC M10 Systems Product Notes* for the latest XCP version.

7.3 FRU Installation Workflow

This section describes the installation workflow for the following FRUs of the SPARC M10-1:

- PCI Express card
- Memory
- Internal disk

7.3.1 Active addition

This section describes the workflow for active/hot addition of an internal disk. References to detailed descriptions are written in the workflow. See any of them as required.

Active addition on the SPARC M10-1 has the following patterns:

- Active/hot addition (for an internal disk)

Active/hot addition (for an internal disk)

Active/hot addition can be performed on an internal disk. Perform the following procedure to install the unit.

Figure 7-7 Active/hot addition flow (for an internal disk)

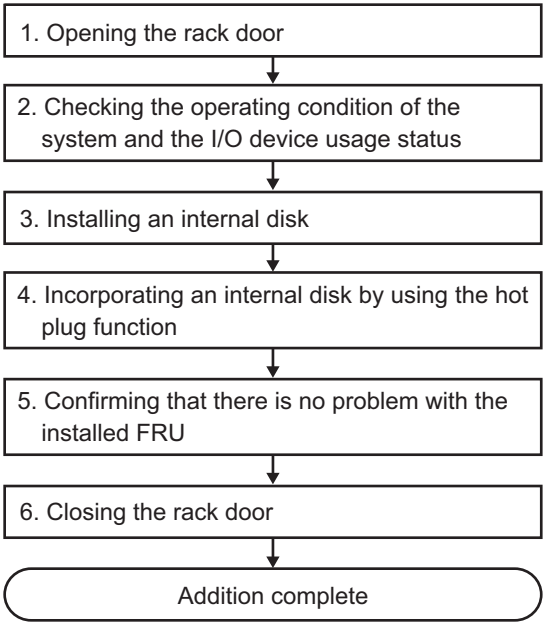

Table 7-9 Active/hot addition work procedure (for an internal disk)

Item	Work procedure	Reference
1	Opening the rack door	
2	Checking the operating condition of the system and the I/O device usage status	"5.3 Checking the Operating Condition and Resource Usage Status"
3	Installing an internal disk	"Chapter 9 Maintaining the Internal Disks"
4	Incorporating an internal disk by using the hot plug function	"6.6 Incorporating an Internal Disk"
5	Confirming that there is no problem with the installed FRU	"6.7 Checking the FRU Status after Maintenance"
6	Closing the rack door	

7.3.2 System-stopped addition

This section describes the workflows for system-stopped/hot and system-stopped/cold FRU installation. References to detailed descriptions are written in the workflow. See any of them as required.

System-stopped addition on the SPARC M10-1 has the following patterns:

- System-stopped/hot addition (for an internal disk)
- System-stopped/cold addition (for memory)
- System-stopped/cold addition

System-stopped/hot addition (for an internal disk)

System-stopped/hot addition can be performed on an internal disk. Perform the following procedure to install the unit.

Figure 7-8 System-stopped/hot addition flow (for an internal disk)

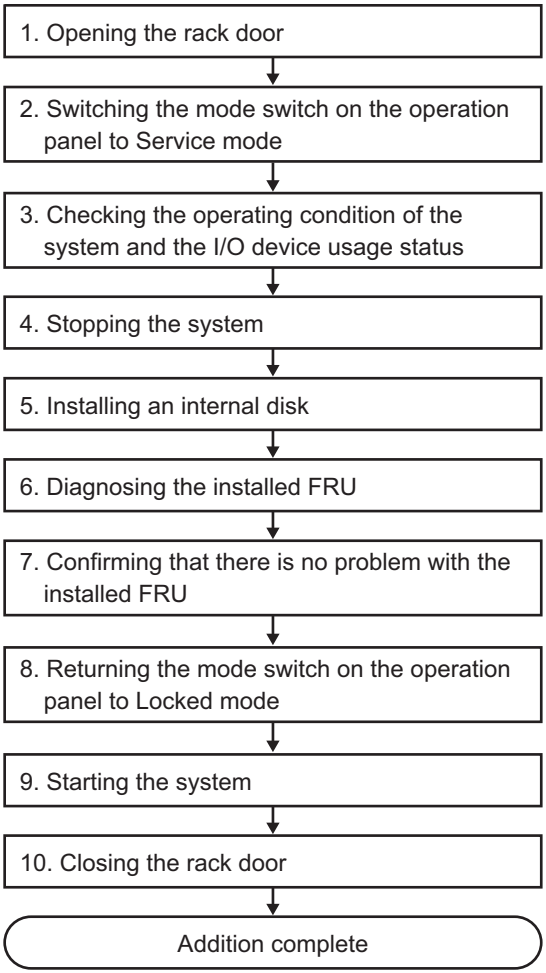

Table 7-10 System-stopped/hot addition work procedure (for an internal disk)

Item	Work procedure	Reference
1	Opening the rack door	
2	Switching the mode switch on the operation panel to Service mode	"5.2 Switching the Mode Switch to Service Mode"
3	Checking the operating condition of the system and the I/O device usage status	"5.3 Checking the Operating Condition and Resource Usage Status"
4	Stopping the system	"5.5 Stopping the Entire System"
5	Installing an internal disk	"Chapter 9 Maintaining the Internal Disks"
6	Diagnosing the installed FRU	"6.4 Diagnosing a Replacement FRU"
7	Confirming that there is no problem with the installed FRU	"6.7 Checking the FRU Status after Maintenance"
8	Returning the mode switch on the operation panel to Locked mode	"6.8 Returning the Mode Switch to Locked Mode"
9	Starting the system	"6.9 Starting the System"
10	Closing the rack door	

System-stopped/cold addition (for memory)

System-stopped/cold addition can be performed on memory. Perform addition according to the following procedure.

Note - If the memory configuration is changed when a logical domain is used in a configuration other than factory-default, the system may start in the factory-default state of the logical domain configuration of the physical partition. In this case, the OpenBoot PROM environment variables of the control domain will be initialized. To prevent this phenomenon, perform the following procedure to install memory.

Figure 7-9 System-stopped/cold addition flow (for memory)

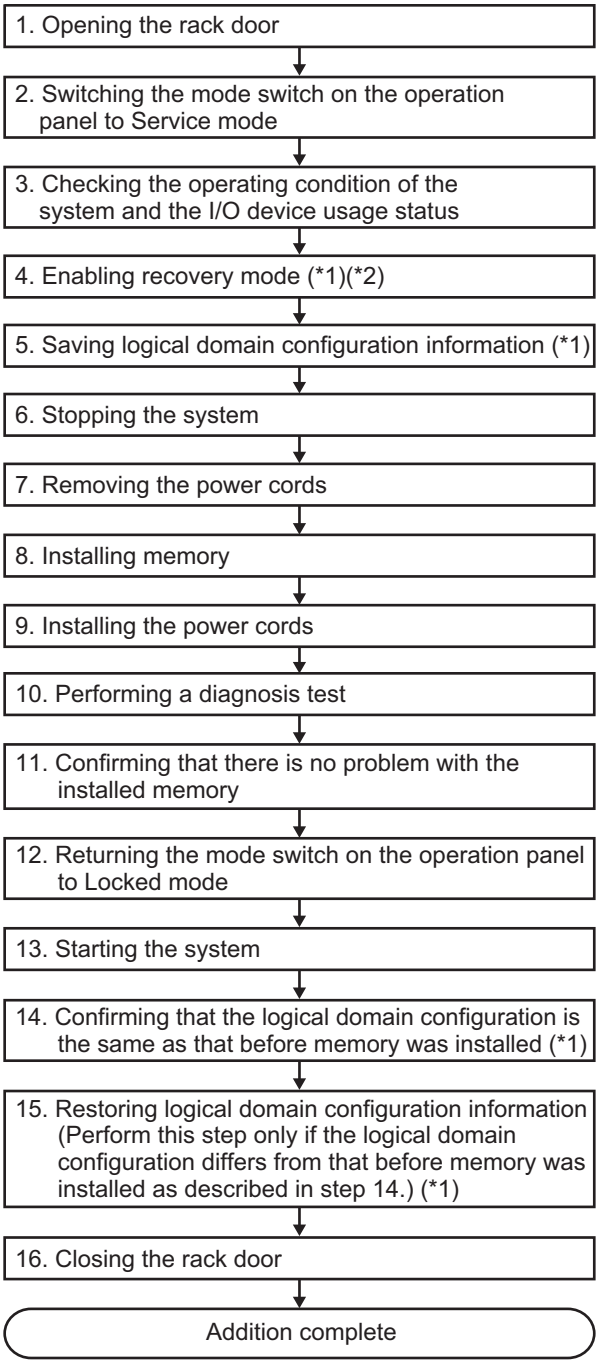

*1 If the logical domain operates in the factory-default state, this step is not necessary.
*2 For operation of the logical domain in a state other than factory-default, this step must be performed if XCP version used is XCP 2271 or later and Oracle VM Server for SPARC 3.1 or later is used.

Table 7-11 System-stopped/cold addition work procedure (for memory)

Item	Work procedure	Reference
1	Opening the rack door	
2	Switching the mode switch on the operation panel to Service mode	"5.2 Switching the Mode Switch to Service Mode"
3	Checking the operating condition of the system and the I/O device usage status	"5.3 Checking the Operating Condition and Resource Usage Status"
4	Enabling recovery mode (*1) (*2)	"5.6.2 Setting recovery mode"
5	Saving logical domain configuration information (*1)	"5.6.3 Saving the logical domain configuration information and OpenBoot PROM environment variables"
6	Stopping the system	"5.5 Stopping the Entire System"
7	Removing the power cords	"5.8.1 Removing the power cords"
8	Installing memory	"16.5.1 Accessing the motherboard unit" "16.6.2 Installing memory" "16.6.3 Restoring the chassis"
9	Installing the power cords	"6.1.6 Installing the power cords"
10	Performing a diagnosis test	"6.4 Diagnosing a Replacement FRU"
11	Confirming that there is no problem with the installed memory	"6.7 Checking the FRU Status after Maintenance"
12	Returning the mode switch on the operation panel to Locked mode	"6.8 Returning the Mode Switch to Locked Mode"
13	Starting the system	"6.9 Starting the System"
14	Confirming that the logical domain configuration is the same as that before memory was installed(*1)	"6.5.2 Confirming that the logical domain configuration is the same as that before memory was installed"
15	Restoring logical domain configuration information (Perform this step only if the logical domain configuration differs from that before memory was installed.) (*1)	"6.5.3 Restoring the logical domain configuration information and OpenBoot PROM environment variables"
16	Closing the rack door	

*1 If the logical domain operates in the factory-default state, this step is not necessary.
*2 For operation of the logical domain in a state other than factory-default, this step must be performed if XCP version used is XCP 2271 or later and Oracle VM Server for SPARC 3.1 or later is used.

System-stopped/cold addition

System-stopped/cold addition can be performed on a PCI Express card and an internal disk. Perform addition according to the following procedure.

Figure 7-10 System-stopped/cold addition flow

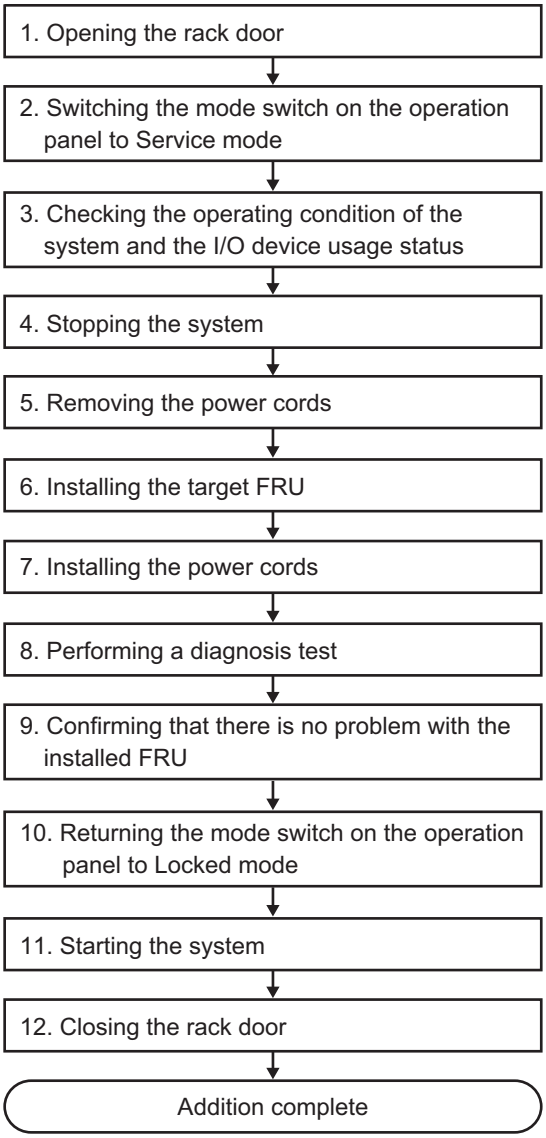

Table 7-12 Work procedure for system-stopped/cold addition

Item	Work procedure	Reference
1	Opening the rack door	
2	Switching the mode switch on the operation panel to Service mode	"5.2 Switching the Mode Switch to Service Mode"
3	Checking the operating condition of the system and the I/O device usage status	"5.3 Checking the Operating Condition and Resource Usage Status"
4	Stopping the system	"5.5 Stopping the Entire System"
5	Removing the power cords	"5.8.1 Removing the power cords"
6	Installing the target FRU	When you install a PCI Express card; "Chapter 8 Maintaining the PCI Express Cards" When you install an internal disk; "Chapter 9 Maintaining the Internal Disks"
7	Installing the power cords	"6.1.6 Installing the power cords"
8	Performing a diagnosis test	"6.4 Diagnosing a Replacement FRU"
9	Confirming that there is no problem with the installed FRU	"6.7 Checking the FRU Status after Maintenance"
10	Returning the mode switch on the operation panel to Locked mode	"6.8 Returning the Mode Switch to Locked Mode"
11	Starting the system	"6.9 Starting the System"
12	Closing the rack door	

7.4 FRU Removal Workflow

This section describes the removal workflow for the following FRUs of the SPARC M10-1:

- PCI Express card
- Memory
- Internal disk

7.4.1 Active removal

This section describes the workflow for active/hot removal of an internal disk. References to detailed descriptions are written in the workflow. See any of them as required.

Note - You can perform the active/hot removal work for an internal disk only in a RAID

configuration.

Active removal on the SPARC M10-1 has the following patterns:

- Active/hot removal (for an internal disk)

Active/hot removal (for an internal disk)

Active/hot removal can be performed on an internal disk. Perform the following procedure to remove the unit.

Figure 7-11 Active/hot removing flow (for an internal disk)

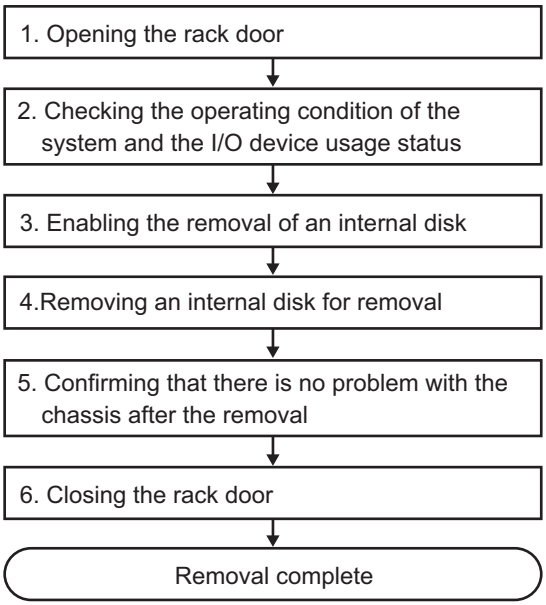

Table 7-13 Active/hot removal work procedure (for an internal disk)

Item	Work procedure	Reference
1	Opening the rack door	
2	Checking the operating condition of the system and the I/O device usage status	"5.3 Checking the Operating Condition and Resource Usage Status"
3	Enabling the removal of an internal disk	"5.4 Enabling the Removal of an Internal Disk"
4	Removing an internal disk for removal	"Chapter 9 Maintaining the Internal Disks"
5	Confirming that there is no problem with the chassis after the removal	"6.7 Checking the FRU Status after Maintenance"
6	Closing the rack door	

7.4.2 System-stopped removal

This section describes the workflows for system-stopped/hot and system-stopped/cold FRU removal. References to detailed descriptions are written in the workflow. See any of them as required.

System-stopped removal on the SPARC M10-1 has the following patterns:

- System-stopped/hot removal (for an internal disk)
- System-stopped/cold removal (for memory)
- System-stopped/cold removal

System-stopped/hot removal (for an internal disk)

System-stopped/hot removal can be performed on an internal disk. Perform the following procedure to remove the unit.

Figure 7-12 System-stopped/hot removal flow (for an internal disk)

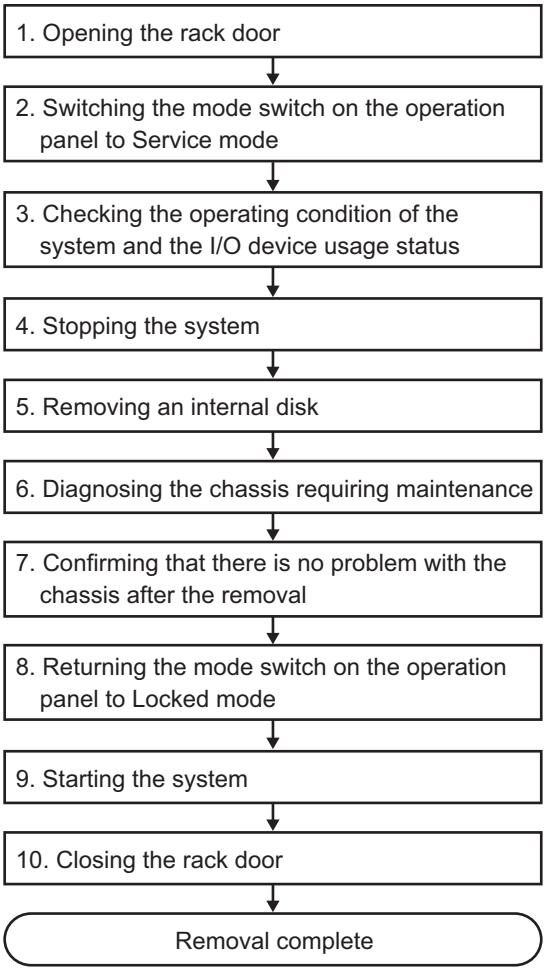

Table 7-14 System-stopped/hot removal work procedure (for an internal disk)

Item	Work procedure	Reference
1	Opening the rack door	
2	Switching the mode switch on the operation panel to Service mode	"5.2 Switching the Mode Switch to Service Mode"
3	Checking the operating condition of the system and the I/O device usage status	"5.3 Checking the Operating Condition and Resource Usage Status"
4	Stopping the system	"5.5 Stopping the Entire System"
5	Removing an internal disk	"Chapter 9 Maintaining the Internal Disks"
6	Diagnosing the chassis requiring maintenance	"6.4 Diagnosing a Replacement FRU"
7	Confirming that there is no problem with the chassis after the removal	"6.7 Checking the FRU Status after Maintenance"
8	Returning the mode switch on the operation panel to Locked mode	"6.8 Returning the Mode Switch to Locked Mode"
9	Starting the system	"6.9 Starting the System"
10	Closing the rack door	

System-stopped/cold removal (for memory)

System-stopped/cold removal can be performed on memory. Perform removal according to the following procedure.

Note - If the memory configuration is changed when a logical domain is used in a configuration other than factory-default, the system may start in the factory-default state of the logical domain configuration of the physical partition. In this case, the OpenBoot PROM environment variables of the control domain will be initialized too.
To prepare for this possibility, record the configuration information for the OpenBoot PROM environment variables in the control domain before removing memory. After you remove memory, if the logical domain configuration of the physical partition enters the factory-default state, set the OpenBoot PROM environment variables and logical domain configuration again by referring to the recorded information.

Figure 7-13 System-stopped/cold removal flow (for memory)

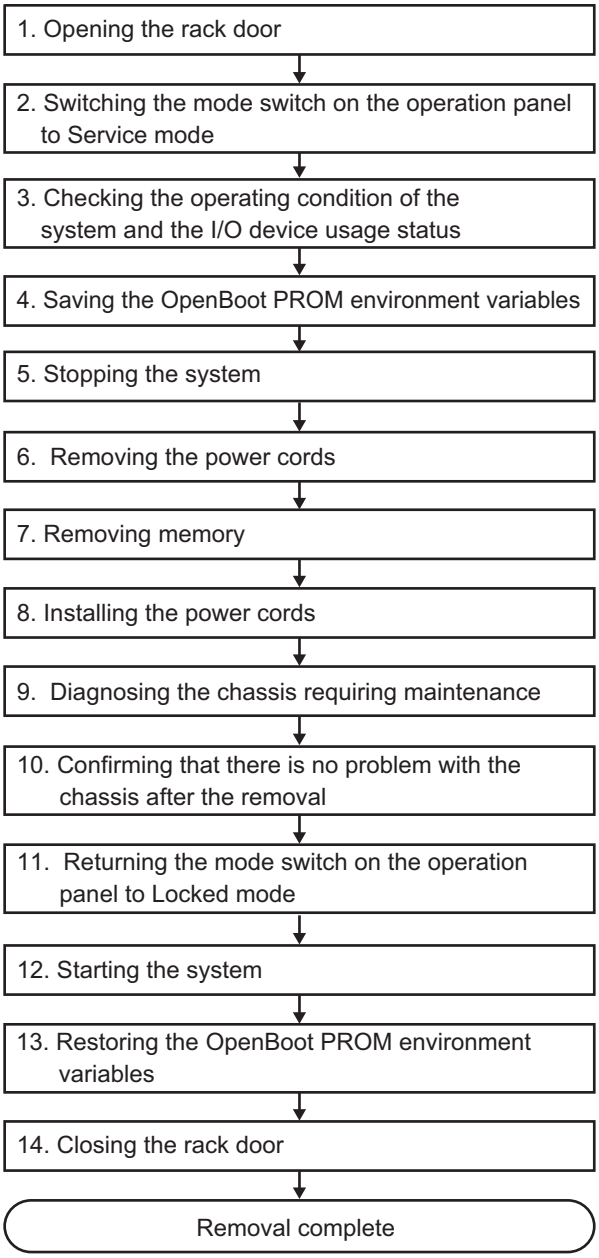

Table 7-15 System-stopped/cold removal work procedure (for memory)

Item	Work procedure	Reference
1	Opening the rack door	
2	Switching the mode switch on the operation panel to Service mode	"5.2 Switching the Mode Switch to Service Mode"
3	Checking the operating condition of the system and the I/O device usage status	"5.3 Checking the Operating Condition and Resource Usage Status"
4	Saving the OpenBoot PROM environment variables	"5.6.3 Saving the logical domain configuration information and OpenBoot PROM environment variables"
5	Stopping the system	"5.5 Stopping the Entire System"
6	Removing the power cords	"5.8.1 Removing the power cords"
7	Removing memory	"16.5.1 Accessing the motherboard unit" "16.5.2 Removing memory" "16.6.3 Restoring the chassis"
8	Installing the power cords	"6.1.6 Installing the power cords"
9	Diagnosing the chassis requiring maintenance	"6.4 Diagnosing a Replacement FRU"
10	Confirming that there is no problem with the chassis after the removal	"6.7 Checking the FRU Status after Maintenance"
11	Returning the mode switch on the operation panel to Locked mode	"6.8 Returning the Mode Switch to Locked Mode"
12	Starting the system	"6.9 Starting the System"
13	Restoring the OpenBoot PROM environment variables	"6.5.3 Restoring the logical domain configuration information and OpenBoot PROM environment variables"
14	Closing the rack door	

System-stopped/cold removal

System-stopped/cold removal can be performed on a PCI Express card and an internal disk. Perform removal according to the following procedure.

Figure 7-14 System-stopped/cold removal flow

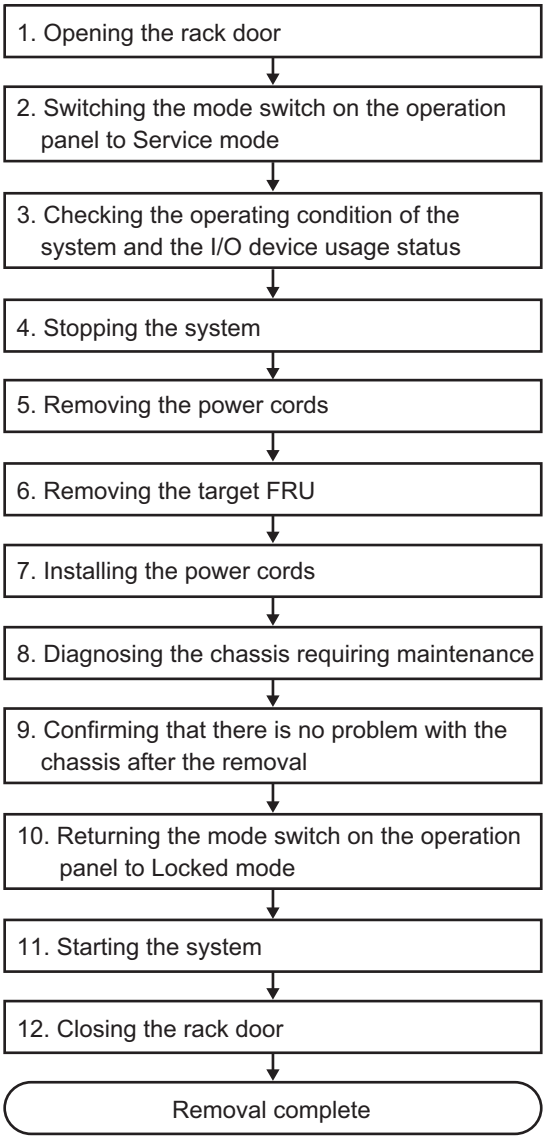

Table 7-16 Work procedure for system-stopped/cold removal

Item	Work procedure	Reference
1	Opening the rack door	
2	Switching the mode switch on the operation panel to Service mode	"5.2 Switching the Mode Switch to Service Mode"
3	Checking the operating condition of the system and the I/O device usage status	"5.3 Checking the Operating Condition and Resource Usage Status"
4	Stopping the system	"5.5 Stopping the Entire System"
5	Removing the power cords	"5.8.1 Removing the power cords"
6	Removing the target FRU	When you remove a PCI Express card; "Chapter 8 Maintaining the PCI Express Cards" When you remove an internal disk; "Chapter 9 Maintaining the Internal Disks"
7	Installing the power cords	"6.1.6 Installing the power cords"
8	Diagnosing the chassis requiring maintenance	"6.4 Diagnosing a Replacement FRU"
9	Confirming that there is no problem with the chassis after the removal	"6.7 Checking the FRU Status after Maintenance"
10	Returning the mode switch on the operation panel to Locked mode	"6.8 Returning the Mode Switch to Locked Mode"
11	Starting the system	"6.9 Starting the System"
12	Closing the rack door	

Chapter 8

Maintaining the PCI Express Cards

This chapter describes the maintenance procedure for a PCI Express (PCIe) card. A PCIe card can be replaced, expanded, or reduced.

8.1 Before Maintaining a PCI Express Card

This chapter only has descriptions of the PCIe card configuration and the work of removing and installing PCIe cards.
Before removing an FRU, see "Chapter 7 Maintenance Flow" and perform the necessary work items.
For the types of maintenance on PCIe cards, also see "PCIe card" in "Table 7-2 Maintenance types for FRUs."

8.2 PCI Express Card Configuration

This section describes the configuration and location of the PCIe cards.
Up to three PCIe cards can be mounted.

Figure 8-1 Location of the PCIe card

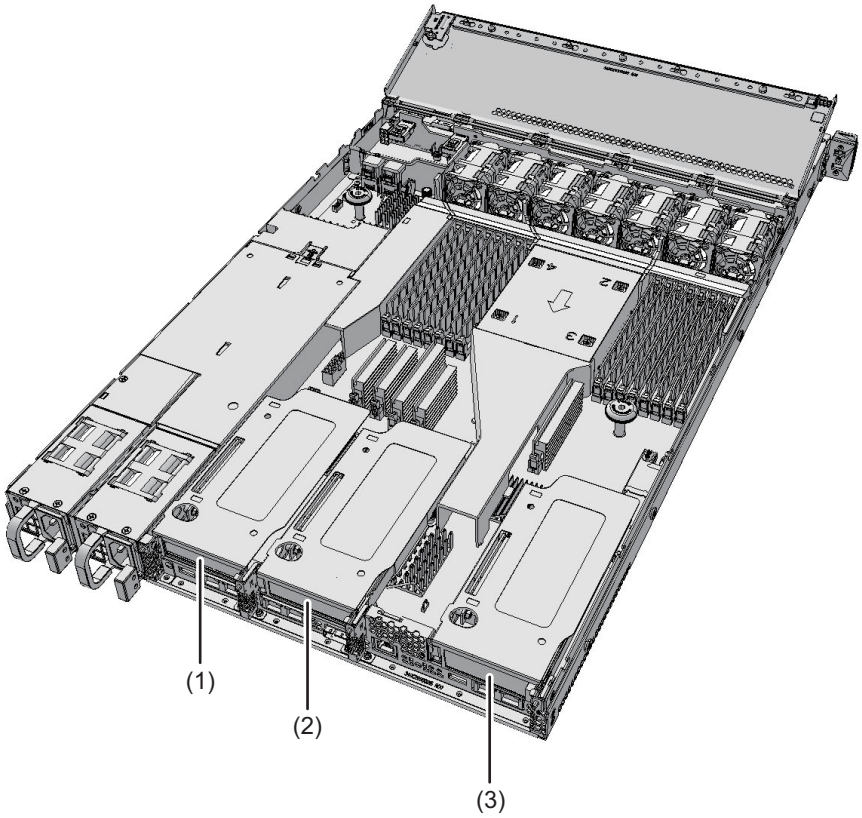

Location number	Component
1	PCIe card (PCI#0)
2	PCIe card (PCI#1)
3	PCIe card (PCI#2)

8.3 Removing a PCI Express Card

This section describes the procedure for removing a PCIe card. Perform reduction using the same procedure.
For expansion, remove the PCIe card filler instead of the PCIe card itself.
Enable removal of the PCIe card before attempting to remove it. For details, see "Chapter 7 Maintenance Flow."

Caution - Before you handle any components, wear a wrist strap to ground any static electricity. If you perform this procedure without a wrist strap, individual components or the overall system may be damaged. For details, see "1.4 Precautions on Static Electricity."

8.3.1 Accessing a PCIe card

1. **Disconnect all the cables connected to the PCIe card requiring maintenance.**

Note - Record the positions of the cables before removing them to ensure that they are reinstalled correctly.

2. **Pull the chassis out of the rack.**
   For details, see "5.8.3 Pulling the chassis out from the rack."
3. **Open the fan cover.**
   For details, see "5.8.4 Opening the fan cover."
4. **Remove the upper cover.**
   For details, see "5.8.5 Removing the upper cover."

8.3.2 Removing a PCI Express riser

1. **Hold the PCIe riser at two points and remove it.**

Note - Place the removed PCIe riser on the grounded antistatic ESD mat.

Figure 8-2 Removing the PCIe riser

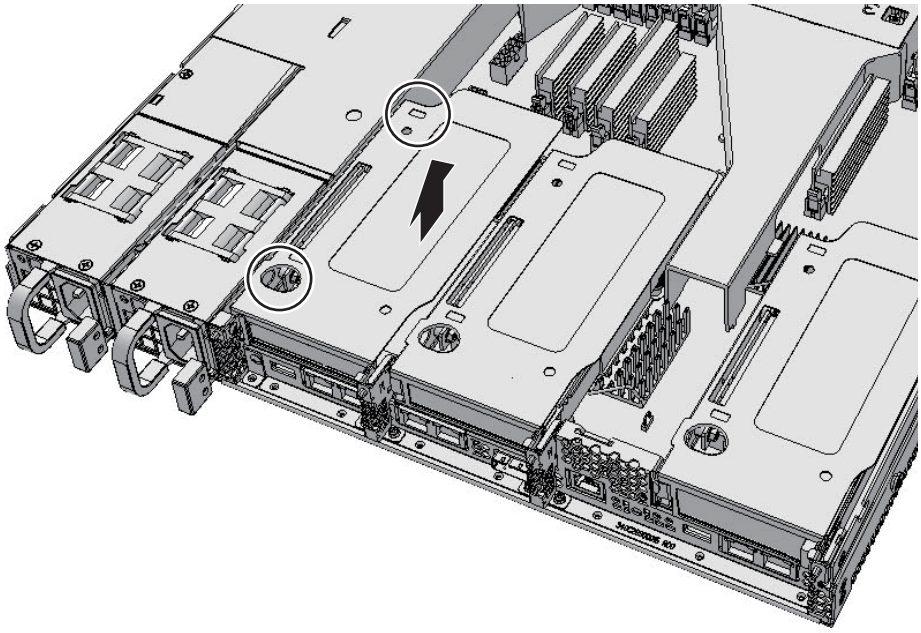

8.3.3 Removing a PCIe card

1. **Remove the PCIe card from the PCIe riser connector.**
   When you expand a PCIe card, you do not have to perform this step. Remove the PCIe card filler from the PCIe riser.

Note - Do not forcibly remove a PCIe card from a PCIe riser. The use of excessive force may damage the PCIe card.
Note - Place the removed PCIe card on the grounded antistatic ESD mat.
Note - The PCIe card filler is easily removed. Be careful not to drop it.

Figure 8-3 Removing a PCIe card

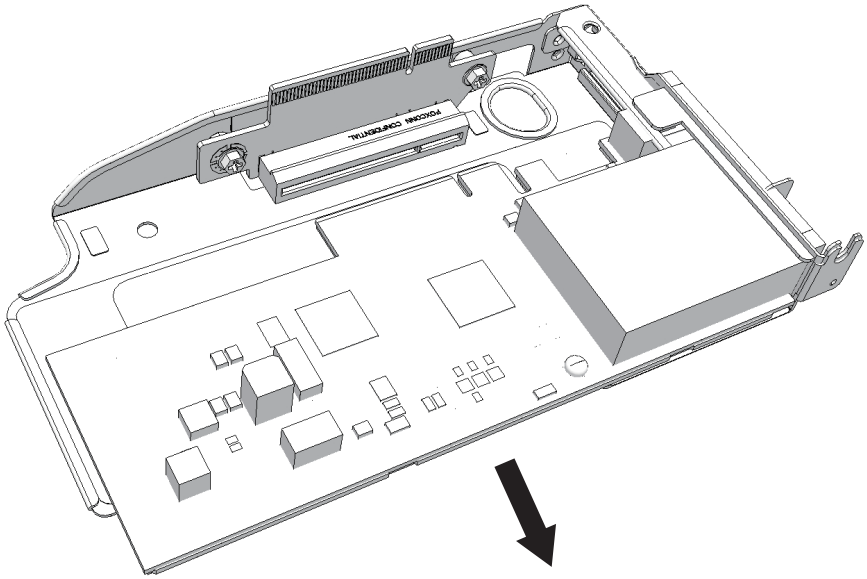

8.4 Installing a PCI Express Card

This section describes the procedure for installing a PCIe card. Perform expansion using the same procedure. For reduction, install a PCIe card filler instead of a PCIe card.

8.4.1 Installing a PCI Express card

1. **Insert the PCIe card into the connector of the PCIe riser.**
   When you reduce a PCIe card, you do not have to perform this step. Install the PCIe card filler in the PCIe riser.

Note - Confirm that the tab (A in Figure 8-4) of the PCIe card or the tab of the PCIe card filler is inserted in the notch (B in Figure 8-4) of the PCIe riser.
Note - The PCIe card filler is easily removed. Be careful not to drop it.

Figure 8-4 Installing a PCIe card

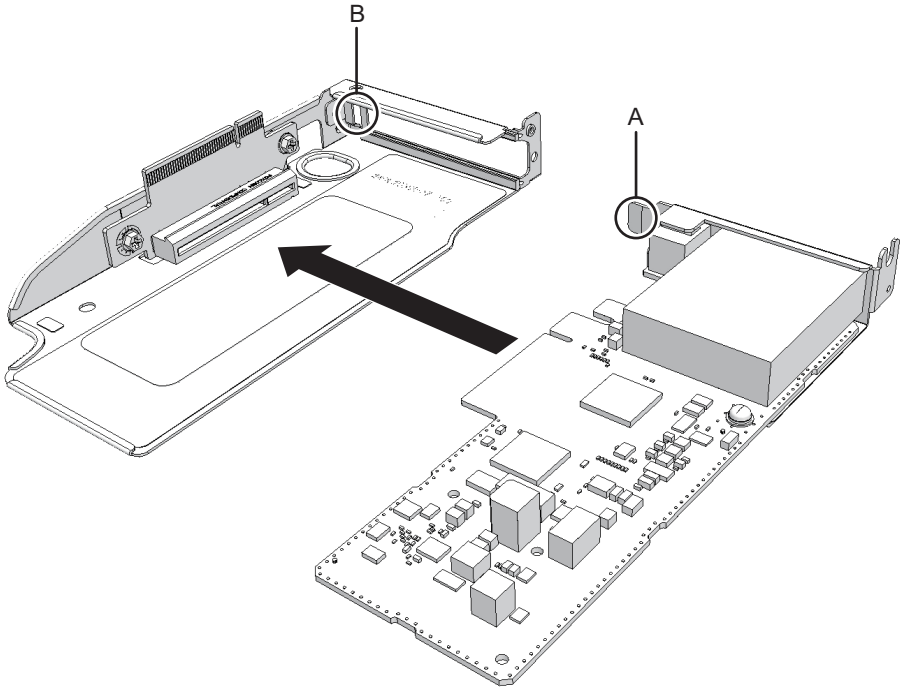

8.4.2 Installing a PCIe riser

1. **Hold the PCIe riser at two points and install it on the motherboard unit.**

8.4.3 Restoring the chassis

1. **Install the upper cover.**
   For details, see "6.1.3 Installing the upper cover."
2. **Close the fan cover.**
   For details, see "6.1.4 Closing the fan cover."
3. **Put the chassis into the rack.**
   For details, see "6.1.5 Putting the chassis into the rack."
4. **Connect all the cables to the PCIe card.**

Note - Connect the cables in their original positions by referring to the record that you made before the start of maintenance.

The FRU installation work is completed. See "Chapter 7 Maintenance Flow" to continue maintenance work.

Chapter 9

Maintaining the Internal Disks

This chapter describes the maintenance procedure for an internal disk. An internal disk can be replaced, expanded, or reduced.

9.1 Before Maintaining an Internal Disk

This chapter only has descriptions of the internal disk configuration and the work of removing and installing internal disks.
Before removing an FRU, see "Chapter 7 Maintenance Flow" and perform the necessary work items.
For the types of maintenance on internal disks, also see "Internal disk" in "Table 7-2 Maintenance types for FRUs."

9.2 Configuration of the Internal Disks

This section describes the configuration and locations of the internal disks.
The chassis has eight slots for mounting internal disks. The system memory storage can be expanded by installing extra hard disk drives (HDDs) or solid state drives (SSDs) in these slots.

Figure 9-1 Location of internal disks

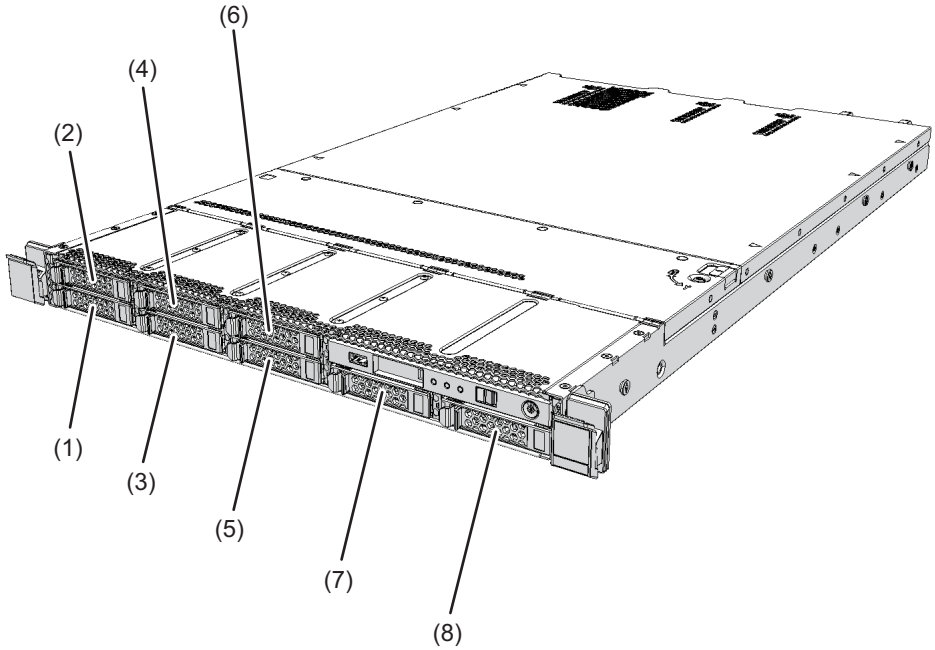

Location number	Component
1	Internal disk (HDD#0)
2	Internal disk (HDD#1)
3	Internal disk (HDD#2)
4	Internal disk (HDD#3)
5	Internal disk (HDD#4)
6	Internal disk (HDD#5)
7	Internal disk (HDD#6)
8	Internal disk (HDD#7)

9.3 Removing an Internal Disk

This section describes the procedures for removing internal disks. Perform reduction using the same procedure.
For expansion, remove the internal disk filler unit from the slot in which the internal disk is to be installed.
Make the internal disk ready for removal before attempting to remove it. For details,

see "Chapter 7 Maintenance Flow."

Caution - Before you handle any components, wear a wrist strap to ground any static electricity. If you perform this procedure without a wrist strap, individual components or the overall system may be damaged. For details, see "1.4 Precautions on Static Electricity."

1. **Push the knob (A in Figure 9-2) of the internal disk to release the lock and open the lever.**

Figure 9-2 Knob of internal disk

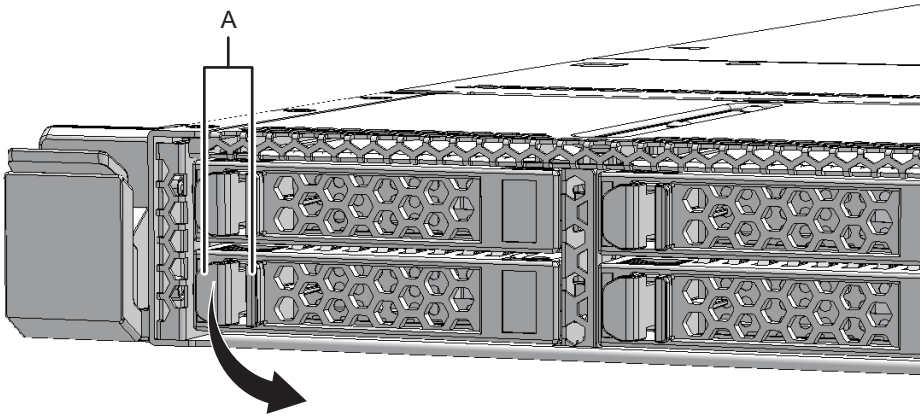

2. **Hold the lever and pull the internal disk out about 2 to 3 cm (0.8 to 1.2 in.).**

Note - When performing active/hot maintenance, hold this position until the motor rotation stops (about 1 minute).

Figure 9-3 Removing an internal disk

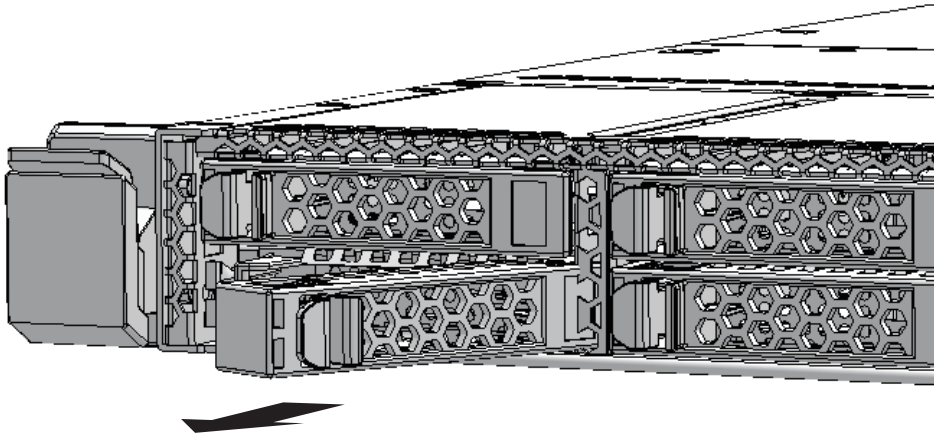

3. **Carefully remove an internal disk from its slot.**

Note - Place the removed internal disk on the grounded antistatic ESD mat.
Note - When you reduce an internal disk, install the filler unit into the slot from which you removed the internal disk.

9.4 Installing an Internal Disk

This section describes the procedure for installing an internal disk. Perform expansion using the same procedure.

Caution - Do not attempt to insert an internal disk into a slot when the lever is closed. Otherwise, the internal disk could jam and prove difficult to remove.

Note - When expanding an internal disk, remove the filler unit of the internal disk from the slot into which you will install the internal disk.

---

1. **Open the lever and hold the internal disk.**
2. **Carefully insert the internal disk into the slot.**

Note - Do not force the internal disk into the slot. Using excessive force may damage the component or the chassis.

---

3. **Close the lever to secure the internal disk.**

The FRU installation work is completed. See "Chapter 7 Maintenance Flow" to continue maintenance work.

Chapter 10

Maintaining the HDD Backplane

This chapter describes the maintenance procedures for the HDD backplane.

10.1 Before Maintaining the HDD Backplane

This chapter only has descriptions of the HDD backplane location and the work of removing and installing the HDD backplane.
Before removing an FRU, see "Chapter 7 Maintenance Flow" and perform the necessary work items.
For the types of maintenance on the HDD backplane, also see "HDD backplane" in "Table 7-2 Maintenance types for FRUs."

10.2 HDD Backplane Location

This section describes the location of the HDD backplane.
The HDD backplane has connectors to enable the connection of multiple internal disks.

Figure 10-1 Location of the HDD backplane

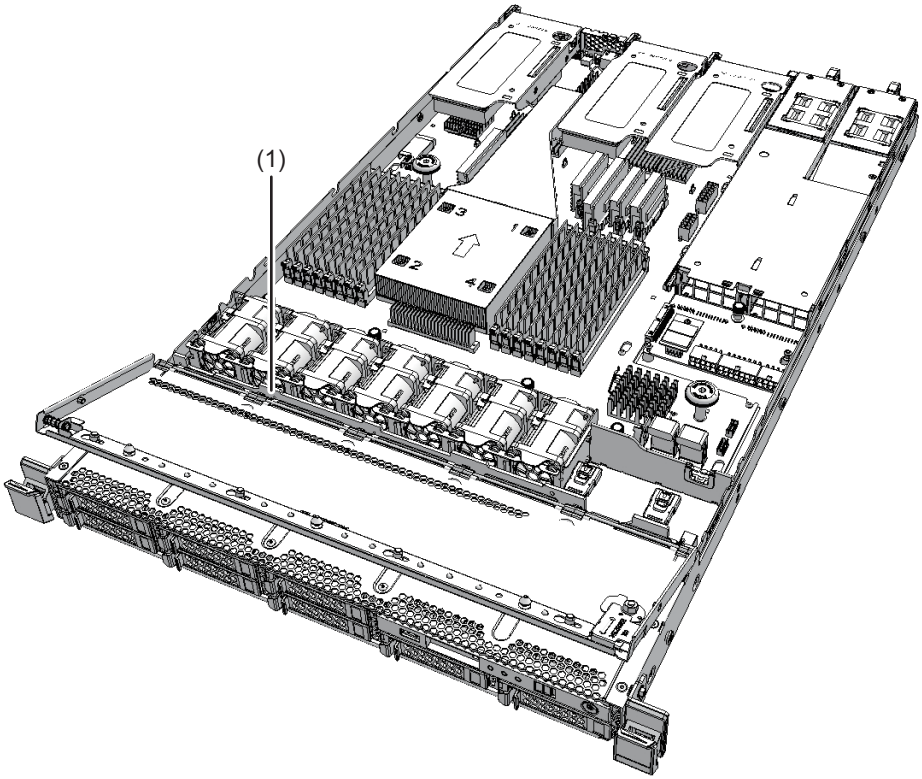

Location number	Component
1	HDD backplane (HDDBP)

10.3 Removing the HDD Backplane

This section describes the procedure for removing the HDD backplane.
Enable removal of the HDD backplane before attempting to remove it. For details, see "Chapter 7 Maintenance Flow."

Caution - Before you handle any components, wear a wrist strap to ground any static electricity. If you perform this procedure without a wrist strap, individual components or the overall system may be damaged. For details, see "1.4 Precautions on Static Electricity."

10.3.1 Accessing the HDD backplane

1. **Pull the chassis out of the rack.**
   For details, see "5.8.3 Pulling the chassis out from the rack."
2. **Remove all the internal disks or filler units mounted in the chassis.**
   For details, see "9.3 Removing an Internal Disk."

Note - Make a note of the locations of the internal disks before removing them to ensure that they are reinstalled correctly.

---

3. **Open the fan cover.**
   For details, see "5.8.4 Opening the fan cover."
4. **Remove the upper cover.**
   For details, see "5.8.5 Removing the upper cover."

10.3.2 Removing the HDD backplane

1. **Disconnect the three cables connected to the HDD backplane.**

Note - Record the positions of the cables before removing them to ensure that they are reinstalled correctly.

Figure 10-2 HDD backplane cables

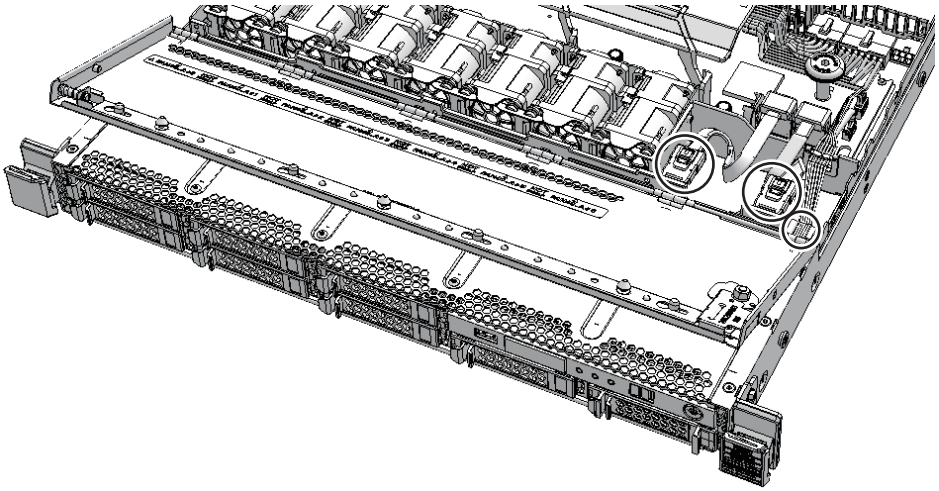

2. **Release the cable guide lock.**
   For details, see "5.8.7 Releasing the cable guide lock."

If the cable guide does not have a lock, proceed to step 3.

3. **Remove the two cables that connect the operation panel to the motherboard unit.**

Note - Record the positions of the cables before removing them to ensure that they are reinstalled correctly.

Figure 10-3 Operation panel cables

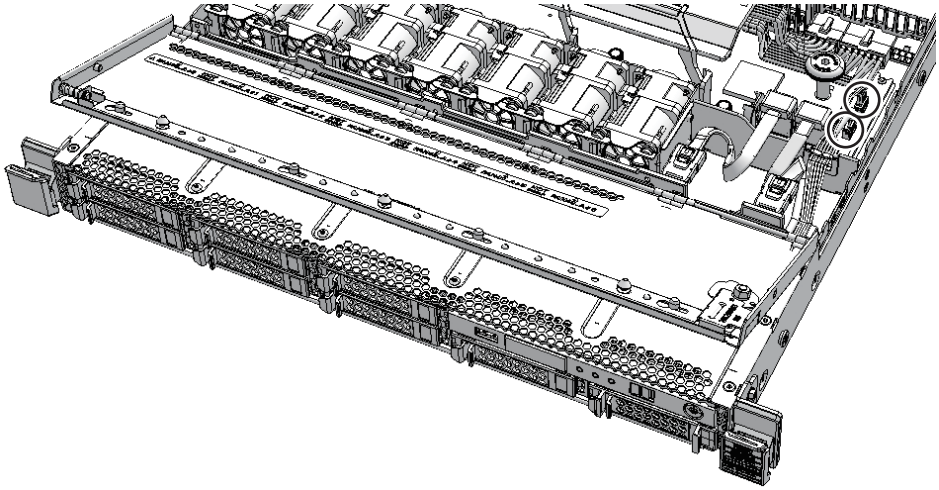

4. **Loosen the two screws securing the HDD backplane.**

Figure 10-4 Screws securing the HDD backplane

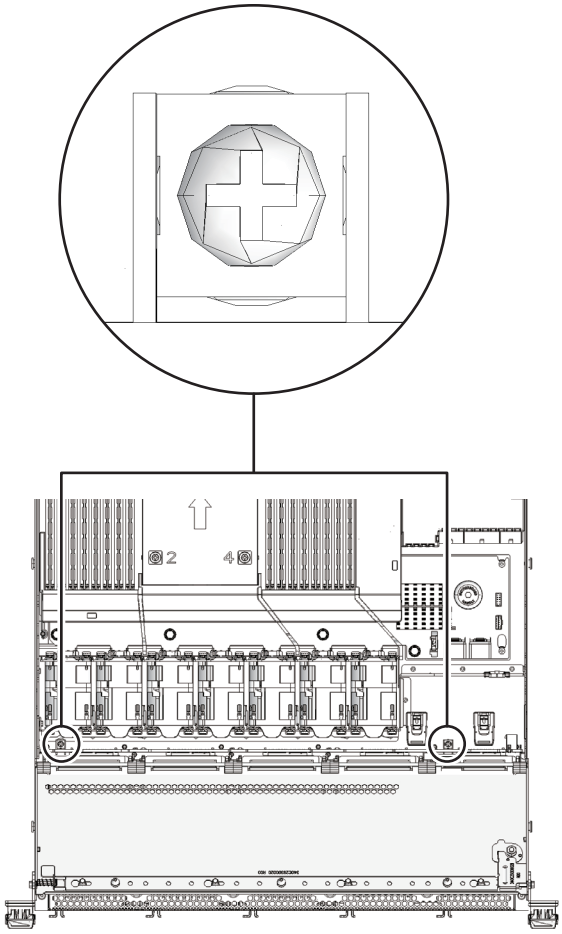

5. **Hold both ends of the HDD backplane and lift it to release it from the hooks (three positions).**

Figure 10-5 Hooks on the chassis

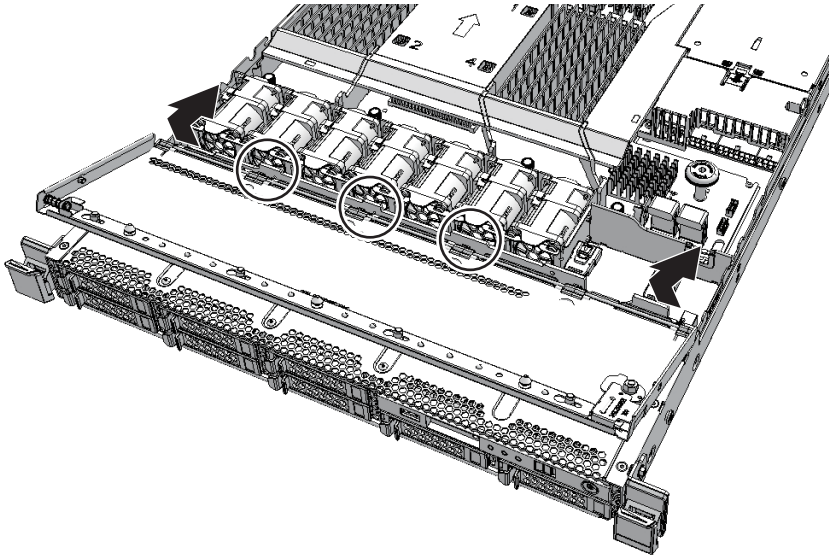

6. **Remove the HDD backplane.**

Note - Place the removed HDD backplane on a grounded antistatic ESD mat.

10.4 Installing the HDD Backplane

This section describes the procedure for installing the HDD backplane.

10.4.1 Installing the HDD backplane

This section describes the procedure for installing the HDD backplane.

1. **Install the HDD backplane by aligning the notches on both sides.**

Figure 10-6 Notches of HDD backplane

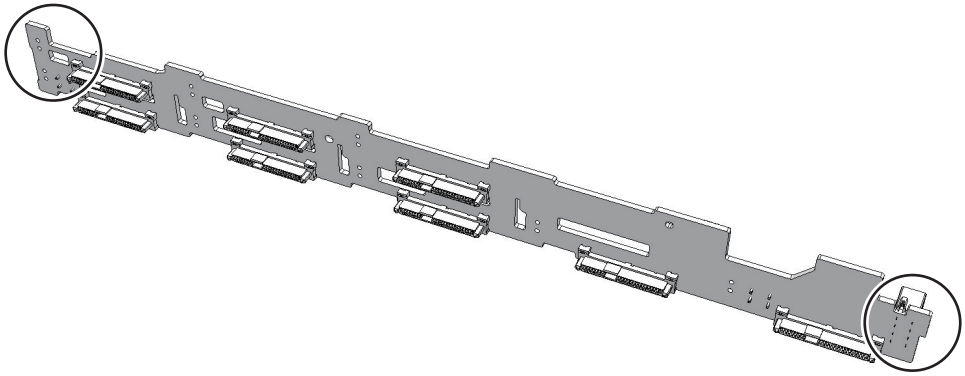

2. **Align the HDD backplane with hooks on the chassis (three positions) and push the backplane into place.**

Figure 10-7 Hooks on the chassis

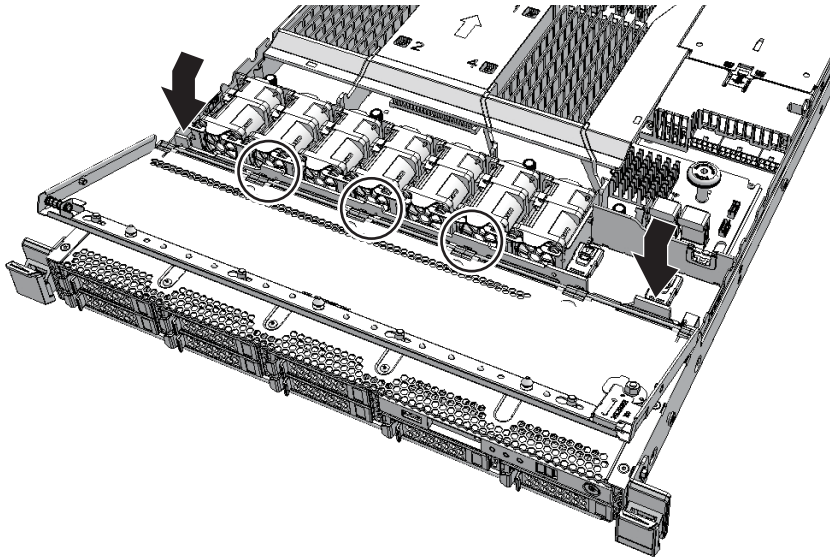

3. **Tighten the two screws securing the HDD backplane.**
4. **Connect the two cables from the operation panel to the motherboard unit.**

Note - Connect the cables in their original positions by referring to the record that you made before the start of maintenance.
Note - When connecting the cables, insert them firmly. If there is a loose connection, the motherboard unit will be unable to access the operation panel, resulting in an XSCF startup error.

Figure 10-8 Operation panel cables

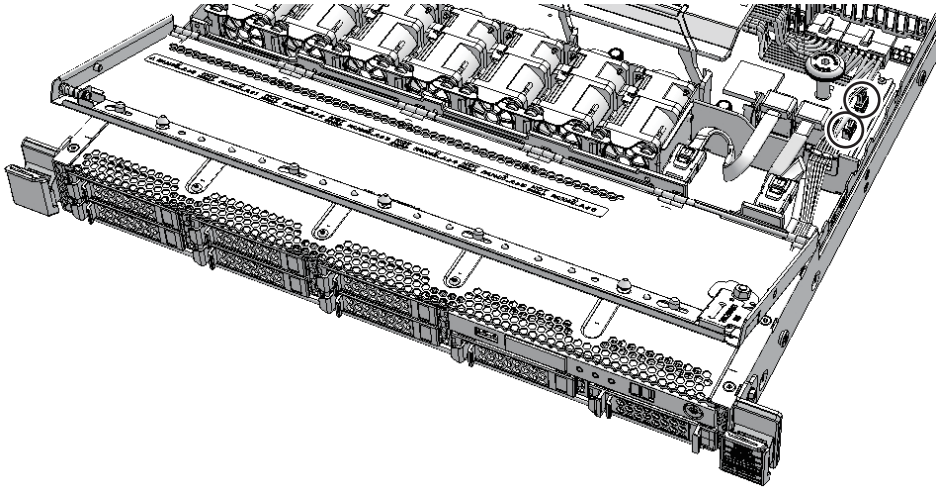

5. **Lock the cable guide after storing the connected cables in the guide.**
   For details, see "6.1.1 Locking the cable guide."

   If the cable guide does not have a lock, proceed to step 6.

6. **Connect the three cables to the HDD backplane.**

Note - Connect the cables in their original positions by referring to the record that you made before the start of maintenance.
Note - Connect the SAS cable with the metal part facing up.

Figure 10-9 HDD backplane cables

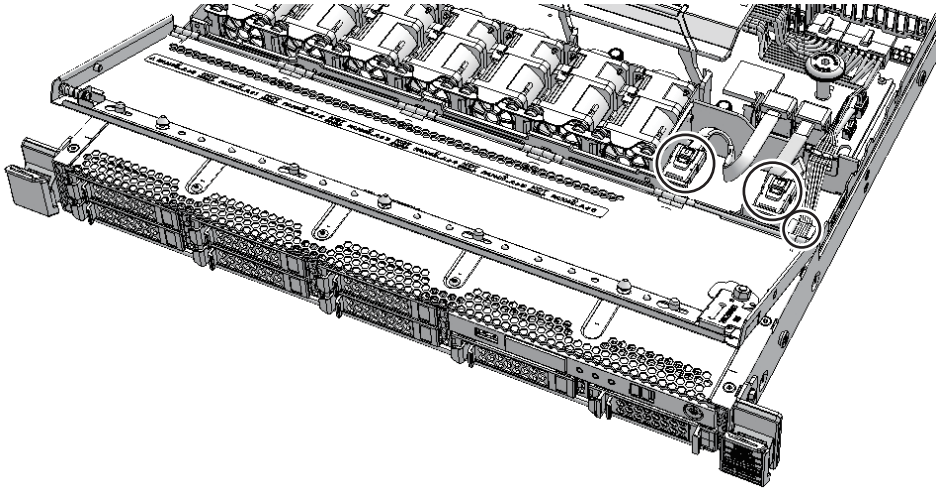

10.4.2 Restoring the chassis

1. **Install the upper cover.**
   For details, see "6.1.3 Installing the upper cover."
2. **Close the fan cover.**
   For details, see "6.1.4 Closing the fan cover."
3. **Install all the internal disks or filler units.**
   For details, see "9.4 Installing an Internal Disk."

Note - Reinstall the internal disks in their original locations by referring to the notes that you made prior to the start of maintenance.

---

4. **Put the chassis into the rack.**
   For details, see "6.1.5 Putting the chassis into the rack."

The FRU installation work is completed. See "Chapter 7 Maintenance Flow" to continue maintenance work.

Chapter 11

Maintaining the Power Supply Units

This chapter describes the maintenance procedure for the power supply units.

- Before Maintaining a Power Supply Unit
- Configuration of the Power Supply Units
- Removing a power supply unit
- Installing a power supply unit

11.1 Before Maintaining a Power Supply Unit

This chapter only has descriptions of the power supply unit configuration and the work of removing and installing power supply units.
Before removing an FRU, see "Chapter 7 Maintenance Flow" and perform the necessary work items.
For the types of maintenance on power supply units, also see "Power supply unit" in "Table 7-2 Maintenance types for FRUs."

11.2 Configuration of the Power Supply Units

This section describes the configuration and the locations of the power supply units. The power supply unit supplies power to the system components. The components can have the 1+1 redundant configuration. Active/hot maintenance can be performed.

Figure 11-1 Location of power supply unit

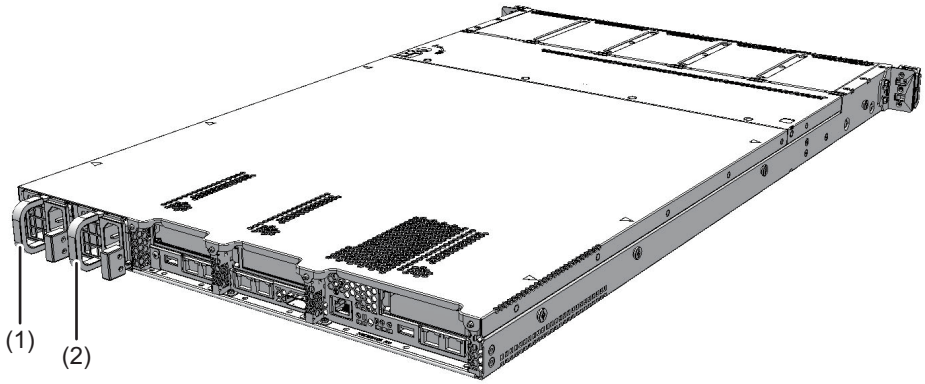

Location number	Component
1	Power supply unit (PSU#0)
2	Power supply unit (PSU#1)

11.3 Removing a Power Supply Unit

This section describes the procedure for removing a power supply unit.
Enable removal of the power supply unit before attempting to remove it. For details, see "Chapter 7 Maintenance Flow."

Caution - Before you handle any components, wear a wrist strap to ground any static electricity. If you perform this procedure without a wrist strap, individual components or the overall system may be damaged. For details, see "1.4 Precautions on Static Electricity."

11.3.1 Accessing a power supply unit

1. **Release the cable management arm.**
   Release the lock by pressing the cable management arm tab (A in Figure 11-2) toward the outside of the chassis to unlock the cable management arm.

Figure 11-2 Unlocking the cable management arm

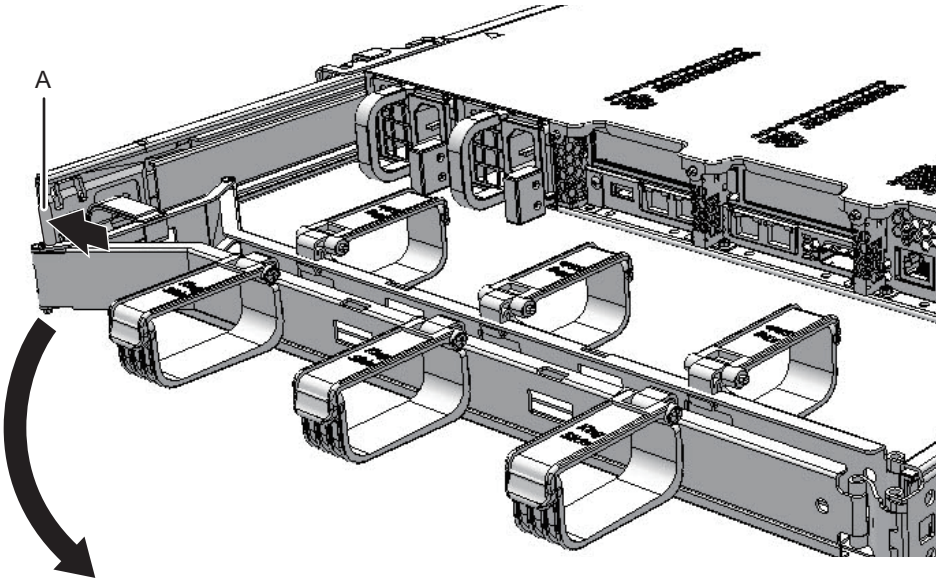

2. **Remove the power cord from the power supply unit requiring maintenance.**
   For details, see "5.8.1 Removing the power cords."

11.3.2 Removing a power supply unit

1. **While pushing the lever (A in Figure 11-3) of the power supply unit requiring maintenance, grab the handle (B in Figure 11-3) to pull the power supply unit out.**

Figure 11-3 Removing a power supply unit

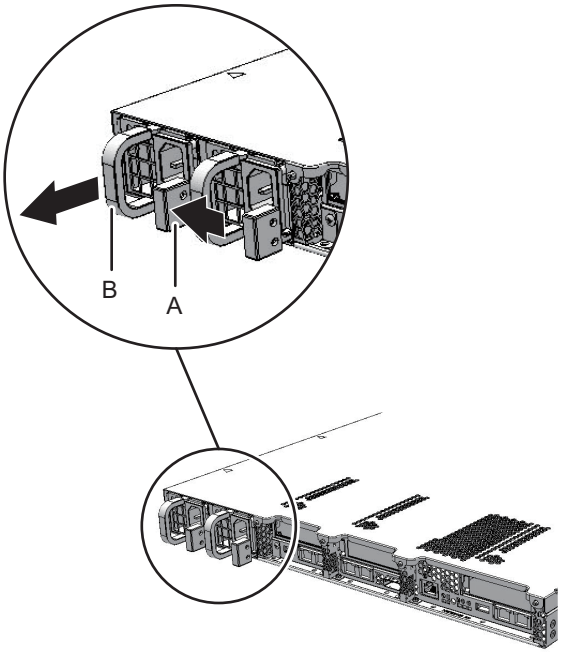

2. **Support the power supply unit with one hand from below and carefully pull it out of the slot.**

Note - Place the removed power supply unit on the grounded ESD mat to ground any static electricity.

11.4 Installing a Power Supply Unit

This section describes the procedure for installing a power supply unit.

11.4.1 Installing a power supply unit

This section describes the procedure for installing a power supply unit.

1. **Support the power supply unit from below with one hand and insert it carefully into its slot.**

Note - Do not forcibly push the power supply unit into its slot. Using excessive force may damage the component or the chassis.

---

2. **Push the power supply unit firmly into place at the mounting location.**

Note - Make sure that the power supply unit is firmly inserted and fixed.

11.4.2 Restoring the chassis

1. **Connect the power cord to the power supply unit requiring maintenance.**
   For details, see "6.1.6 Installing the power cords."
2. **Close the cable management arm.**

Note - Check that the cable management arm is locked with its tab (A in Figure 11-4).

Figure 11-4 Cable management arm tab

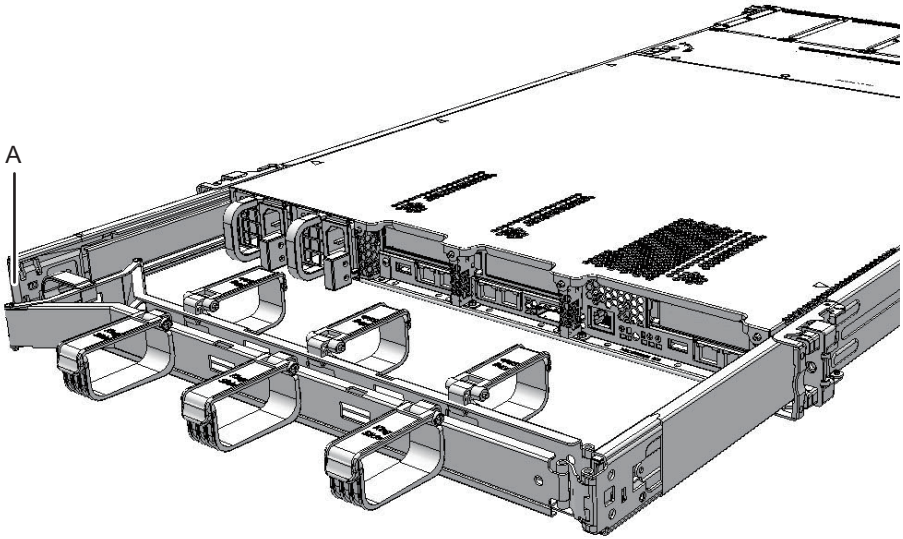

The FRU installation work is completed. See "Chapter 7 Maintenance Flow" to continue maintenance work.

Chapter 12

Maintaining the PSU Backplane

This chapter describes the maintenance procedure for the PSU backplane.

12.1 Before Maintaining the PSU Backplane

This chapter only has descriptions of the PSU backplane location and the work of removing and installing the PSU backplane.
Before removing an FRU, see "Chapter 7 Maintenance Flow" and perform the necessary work items.
For the types of maintenance on the PSU backplane, also see "PSU backplane" in "Table 7-2 Maintenance types for FRUs."

12.2 PSU Backplane Location

This section describes the location of the PSU backplane.
The PSU backplane has connectors to enable the connection of multiple power supply units.

Figure 12-1 Location of the PSU backplane

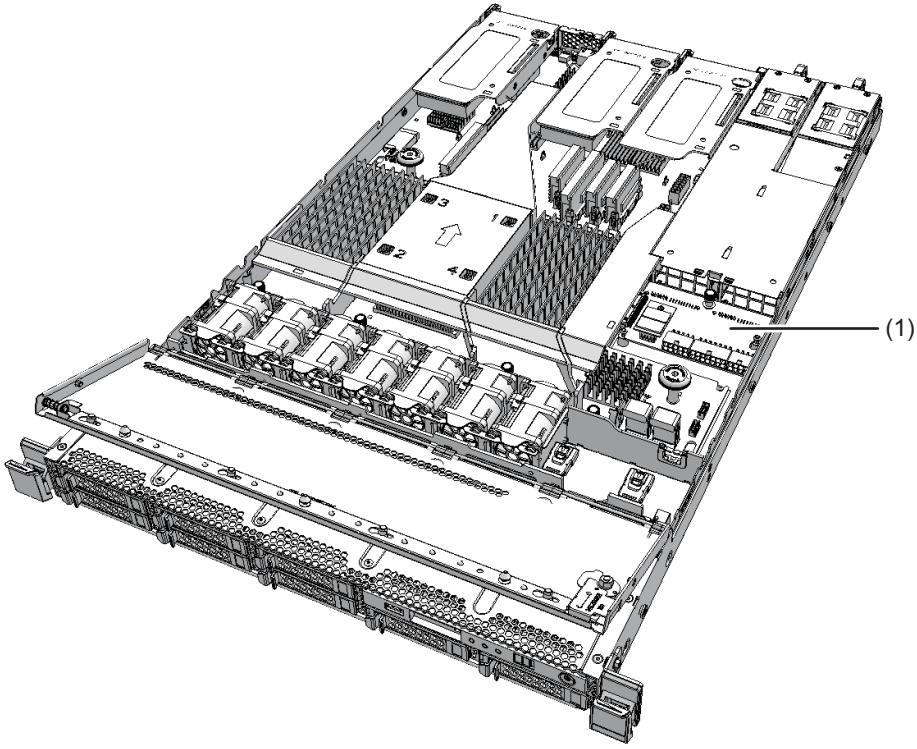

Location number	Component
1	PSU backplane (PSUBP)

12.3 Precautions for Maintaining the PSU Backplane

Note the following points when replacing the PSU backplane.

- If you replace the motherboard unit and the PSU backplane at the same time, the system may fail to operate correctly. Replace the motherboard unit or the PSU backplane, and then execute the showhardconf or showstatus command to verify that the replaced Field Replaceable Unit (FRU) is fully operational. Then, replace the other FRU.
- Set the system time.
  After replacing the PSU backplane, you need to set the system time. For details, see "Notes on Maintenance of a CPU Memory Unit, Motherboard Unit, XSCF Unit,

PSU Backplane, or Crossbar Backplane Unit" in the *Fujitsu M10/SPARC M10 Systems Product Notes* for the latest XCP version.

12.4 Removing the PSU Backplane

This section describes the procedure for removing the PSU backplane.
Enable the removal of the PSU backplane before attempting to remove it. For details, see "Chapter 7 Maintenance Flow."

Caution - Before you handle any components, wear a wrist strap to ground any static electricity. If you perform this procedure without a wrist strap, individual components or the overall system may be damaged. For details, see "1.4 Precautions on Static Electricity."

12.4.1 Accessing the PSU backplane

1. **Remove all the power supply units.**
   For details, see "11.3 Removing a Power Supply Unit."
2. **Pull the chassis out of the rack.**
   For details, see "5.8.3 Pulling the chassis out from the rack."
3. **Open the fan cover.**
   For details, see "5.8.4 Opening the fan cover."
4. **Remove the upper cover.**
   For details, see "5.8.5 Removing the upper cover."
5. **Remove the air duct and the PSU backplane cover.**
   For details, see "5.8.6 Removing the air duct and PSU backplane cover."

12.4.2 Removing the PSU backplane

1. **Remove the three (3) cables from the motherboard unit that connect the PSU backplane to the motherboard unit.**

Note - Record the positions of the cables before removing them to ensure that they are reinstalled correctly.

Figure 12-2 Cable removal locations of the motherboard unit

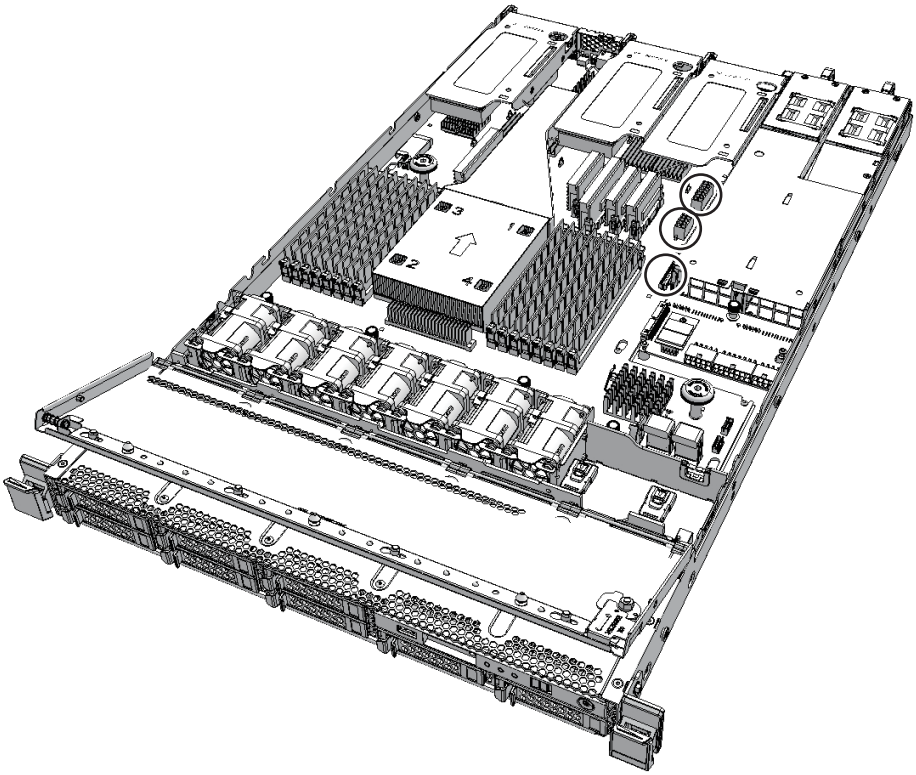

2. **Release the cable guide lock.**
   For details, see "5.8.7 Releasing the cable guide lock."

   If the cable guide does not have a lock, proceed to step 3.

3. **Remove one cable of the HDD backplane which connects the PSU backplane and the HDD backplane.**

Figure 12-3 HDD backplane cables

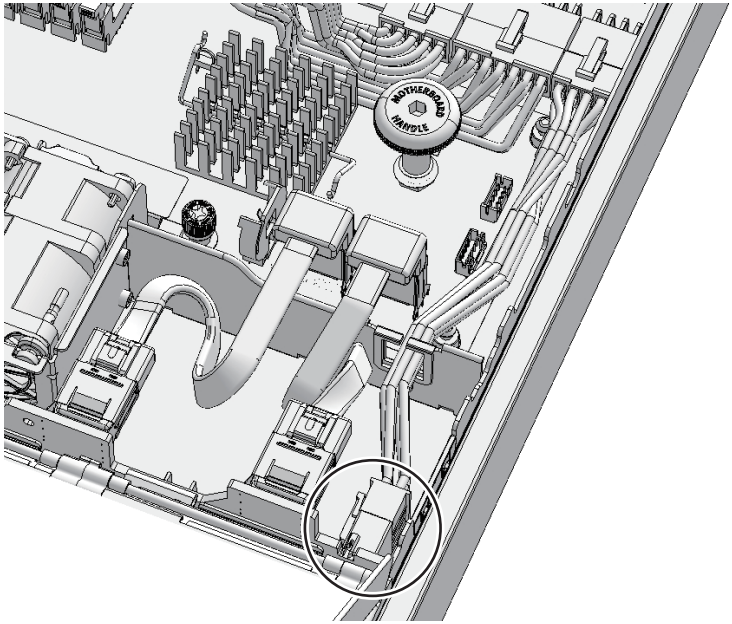

4. **Loosen the screw that secures the PSU backplane.**

Figure 12-4 Screw securing the PSU backplane

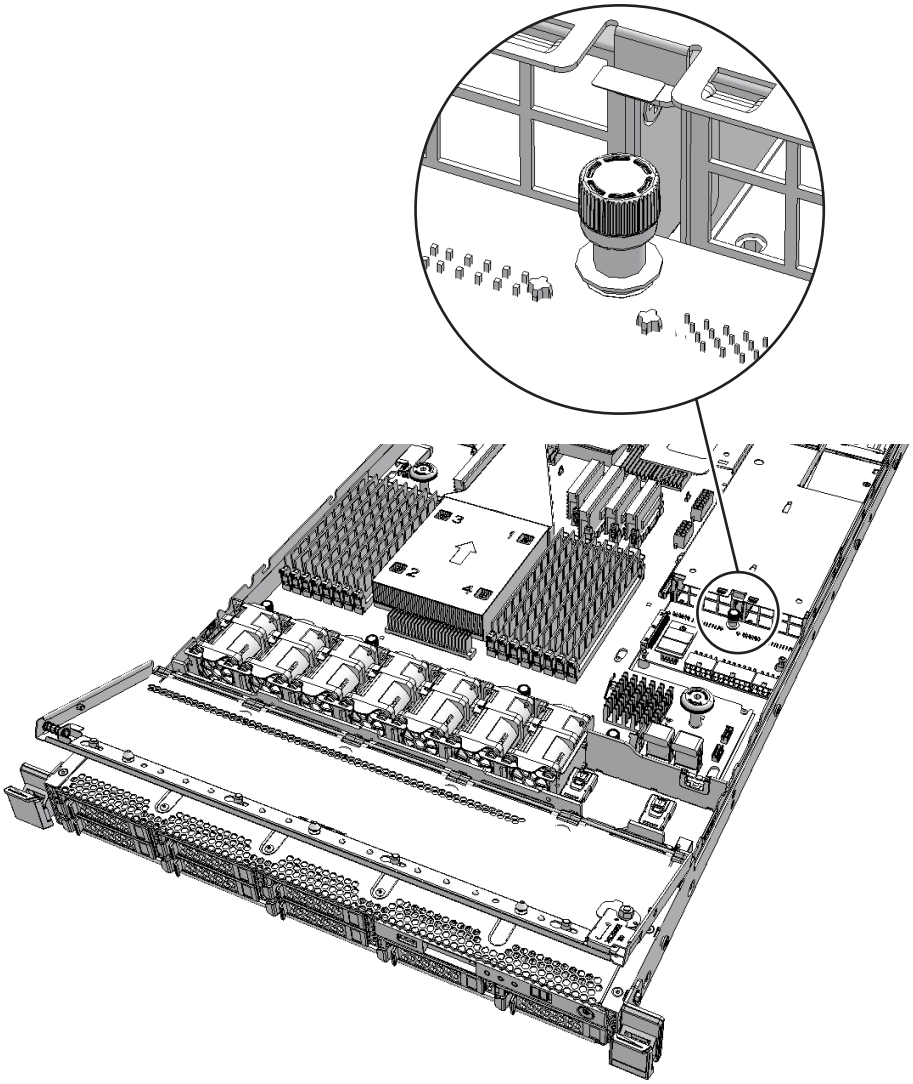

5. **Slide the PSU backplane toward the rear of the chassis to release it from the two fixing pins (A in Figure 12-5).**

Figure 12-5 Fixing pins of PSU backplane

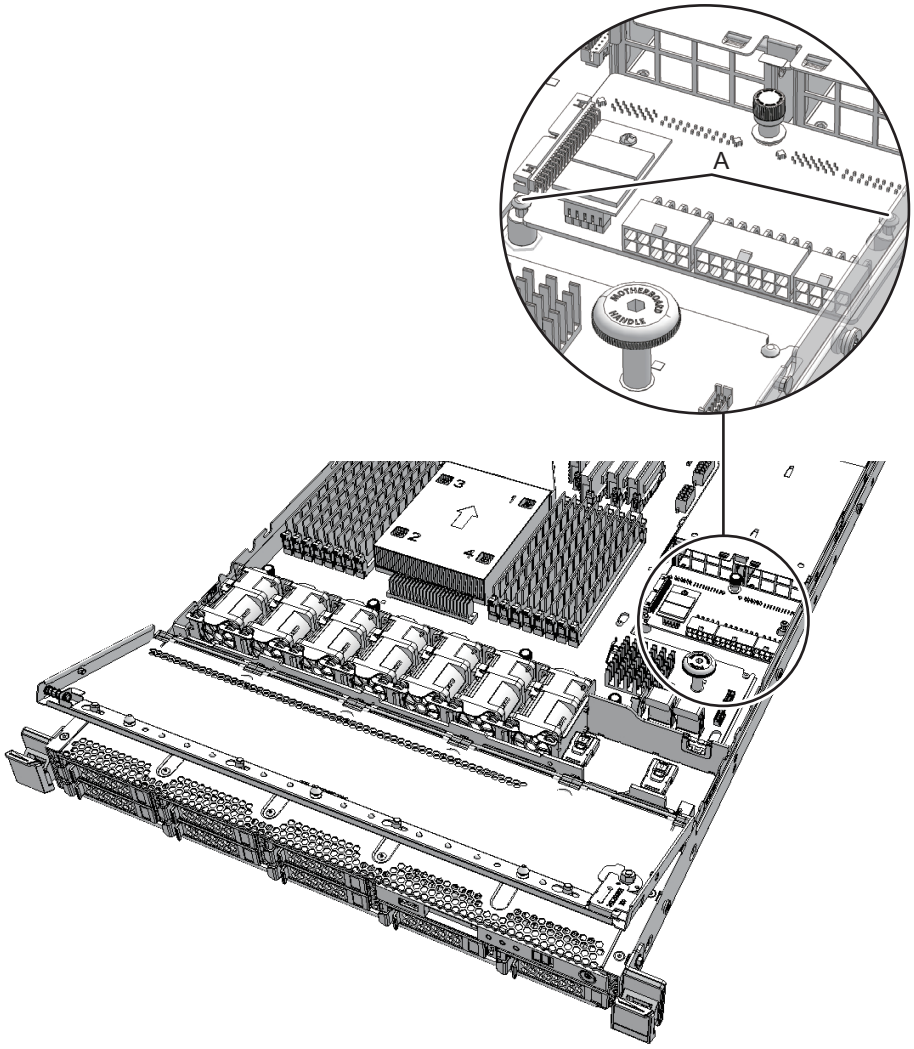

6. **Lift the PSU backplane and disconnect the four cables (A in Figure 12-6) connected to the PSU backplane.**

Note - Record the positions of the cables before removing them to ensure that they are reinstalled correctly.
Note - Place the removed PSU backplane on a grounded antistatic ESD mat.

Figure 12-6 PSU backplane cables

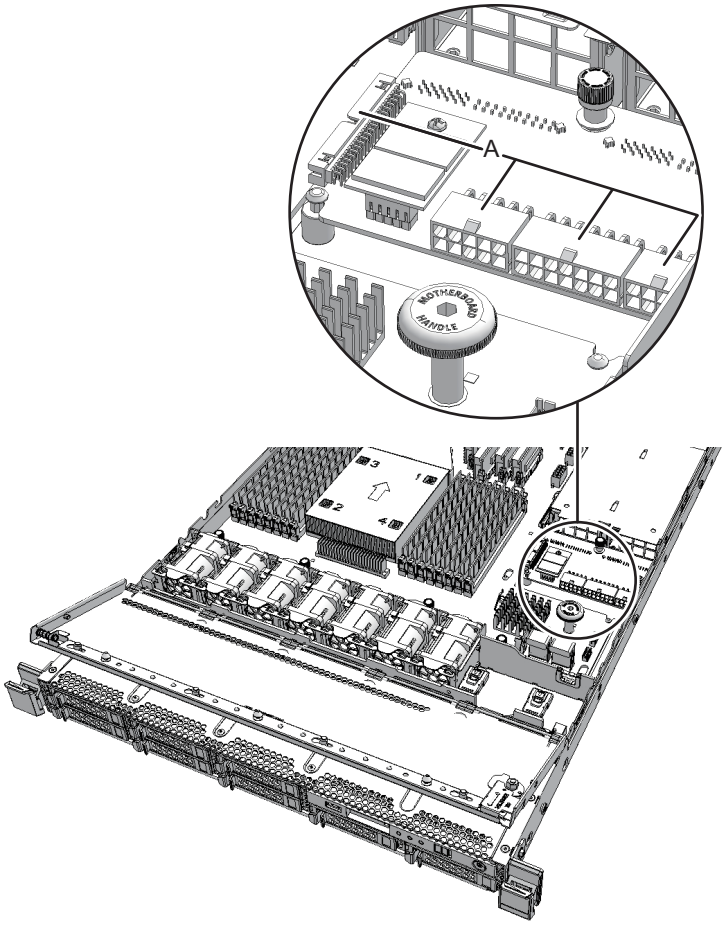

12.5 Installing the PSU Backplane

This section describes the procedure for installing the PSU backplane.

12.5.1 Installing the PSU backplane

This section describes the procedure for installing the PSU backplane.

1. **Lift the PSU backplane and connect the four cables (A in Figure 12-7) to the PSU backplane.**

Figure 12-7 PSU backplane cables

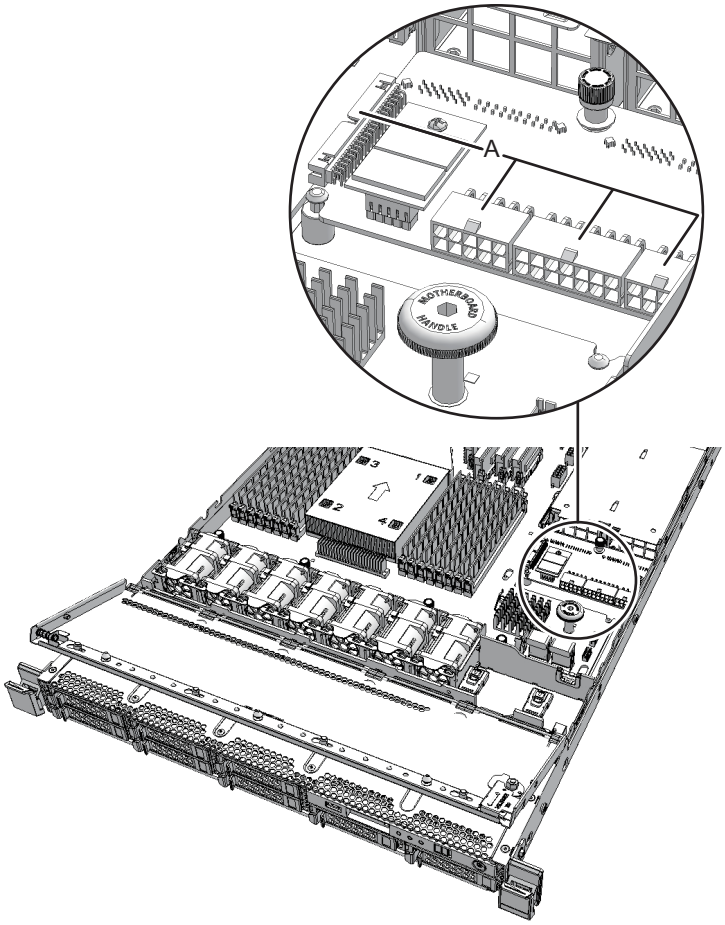

2. **Install the PSU backplane.**
3. **Check that the two fixing pins are inserted into the PSU backplane, and then slide the PSU backplane toward the rear of the chassis.**
4. **Tighten the screw securing the PSU backplane.**
5. **Connect one cable connecting the PSU backplane to the HDD backplane.**

Figure 12-8 HDD backplane cables

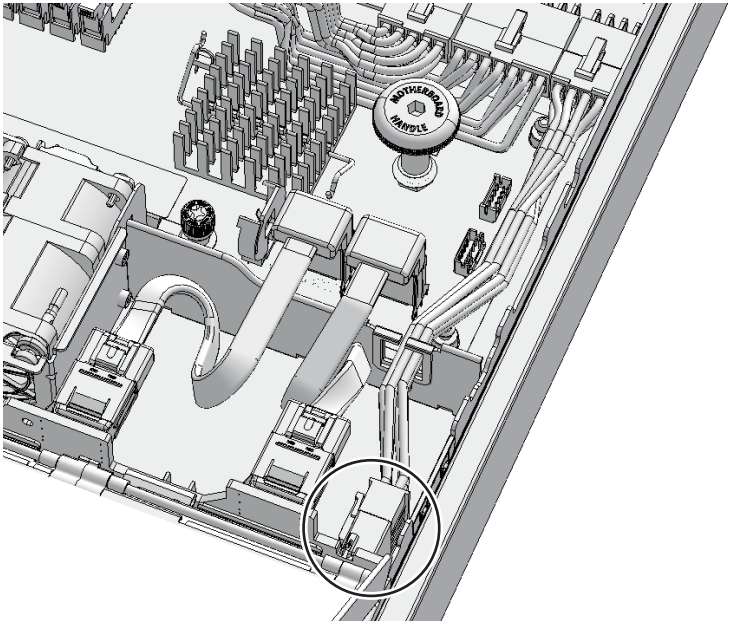

6. **Lock the cable guide after storing the connected cables in the guide.**
   For details, see "6.1.1 Locking the cable guide."

   If the cable guide does not have a lock, proceed to step 7.

7. **Connect the three cables connecting the PSU backplane to the motherboard unit.**

Note - Connect the cables in their original positions by referring to the record that you made before the start of maintenance.
Note - Make sure that each cable is firmly inserted.

Figure 12-9 Motherboard unit cables

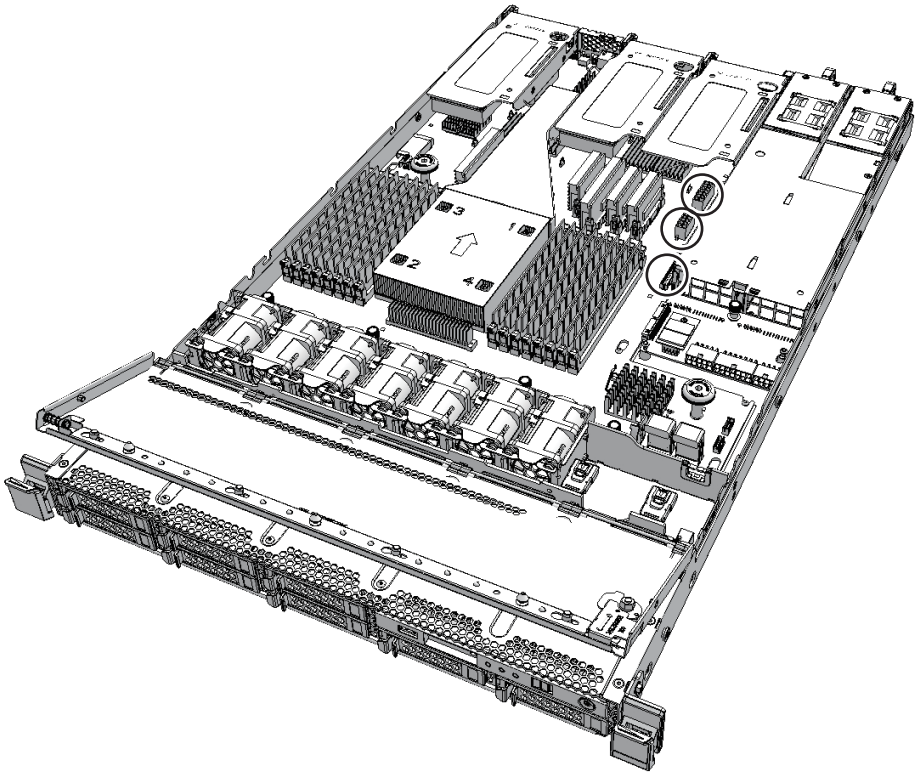

12.5.2 Restoring the chassis

1. **Install the air duct and the PSU backplane cover.**
   For details, see "6.1.2 Installing the air duct and PSU backplane cover."
2. **Install the upper cover.**
   For details, see "6.1.3 Installing the upper cover."
3. **Close the fan cover.**
   For details, see "6.1.4 Closing the fan cover."
4. **Install all the power supply units.**
   For details, see "11.4 Installing a Power Supply Unit."

The FRU installation work is completed. See "Chapter 7 Maintenance Flow" to continue maintenance work.

Chapter 13

Maintaining the Cable Kit

This section describes the maintenance procedure for the cable kit.

- Before Maintaining the Cable Kit
- Cable Kit Location
- Removing the cable kit
- Installing the cable kit

13.1 Before Maintaining the Cable Kit

This chapter only has descriptions of the cable kit location and the work of removing and installing the cable kit.
Before removing an FRU, see "Chapter 7 Maintenance Flow" and perform the necessary work items.
For the types of maintenance on the cable kit, also see "Cable kit" in "Table 7-2 Maintenance types for FRUs."

13.2 Cable Kit Location

This section describes the location of the cable kit.
The cable kit contains three cables for connecting the motherboard unit with the PSU backplane and one cable for connecting the motherboard unit with the HDD backplane.

Figure 13-1 Location of the cable kit

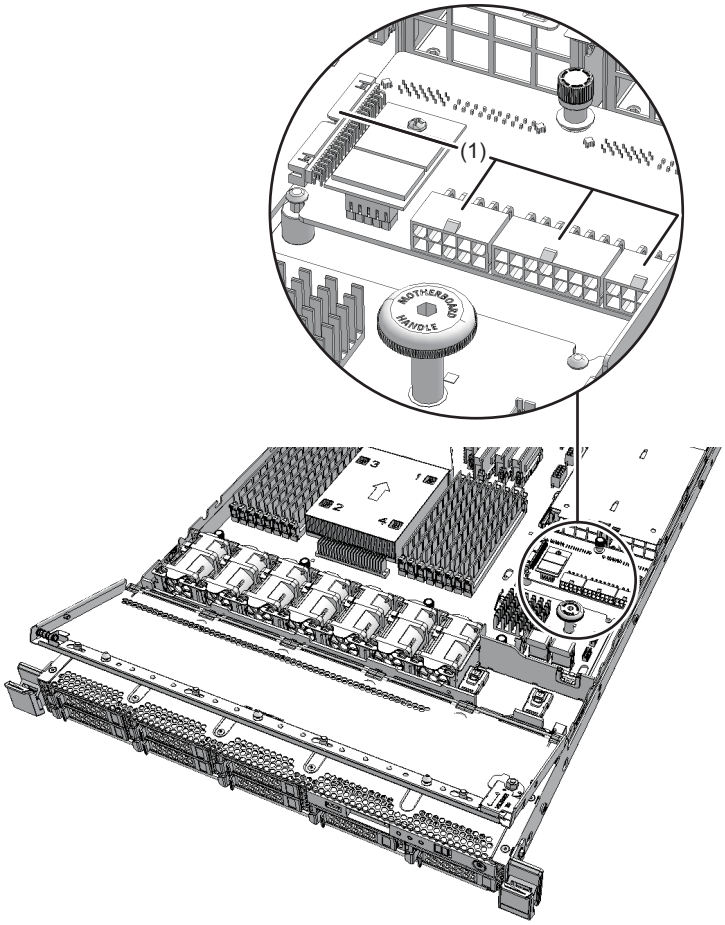

Location number	Component
1	Cable kit

13.3 Removing the Cable Kit

This section describes the procedure for removing the cable kit.
Enable removal of the cable kit before attempting to remove it. For details, see "Chapter 7 Maintenance Flow."

Caution - Before you handle any components, wear a wrist strap to ground any static electricity. If you perform this procedure without a wrist strap, individual components or the overall system may be damaged. For details, see "1.4 Precautions on Static Electricity."

13.3.1 Accessing the cable kit

1. **Remove all the power supply units.**
   For details, see "11.3 Removing a Power Supply Unit."
2. **Pull the chassis out of the rack.**
   For details, see "5.8.3 Pulling the chassis out from the rack."
3. **Open the fan cover.**
   For details, see "5.8.4 Opening the fan cover."
4. **Remove the upper cover.**
   For details, see "5.8.5 Removing the upper cover."
5. **Remove the air duct and the PSU backplane cover.**
   For details, see "5.8.6 Removing the air duct and PSU backplane cover."

13.3.2 Removing the cable kit

1. **Remove the three (3) cables from the motherboard unit that connect the PSU backplane to the motherboard unit.**

Note - Record the positions of the cables before removing them to ensure that they are reinstalled correctly.

Figure 13-2 Cables of the motherboard unit

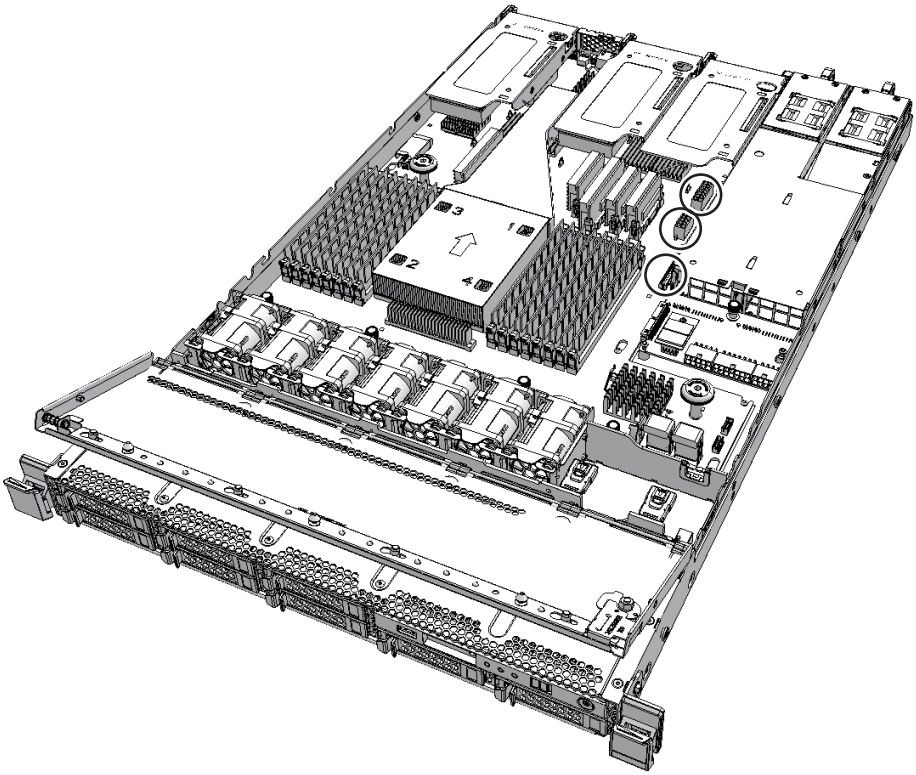

2. **Release the cable guide lock.**
   For details, see "5.8.7 Releasing the cable guide lock."

   If the cable guide does not have a lock, proceed to step 3.

3. **Remove one cable of the HDD backplane which connects the PSU backplane and the HDD backplane.**

Figure 13-3 HDD backplane cables

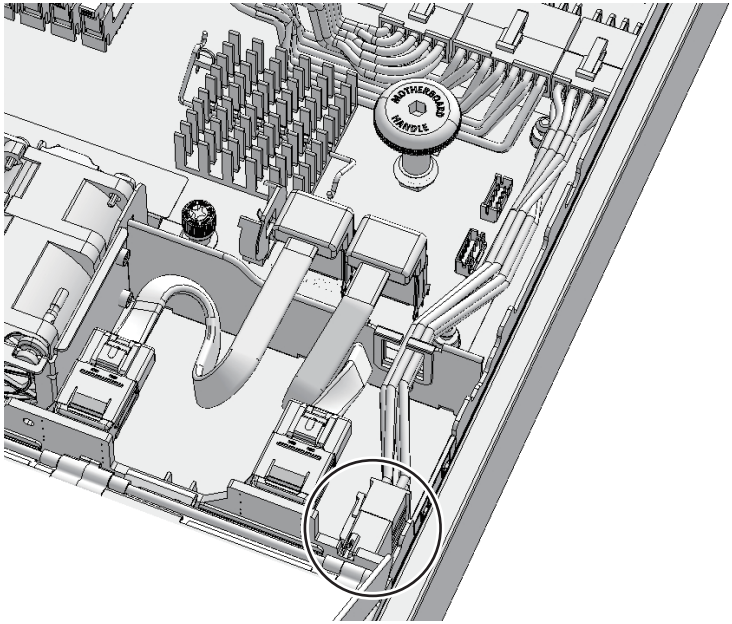

4. **Loosen the screw that secures the PSU backplane.**

Figure 13-4 Screw securing the PSU backplane

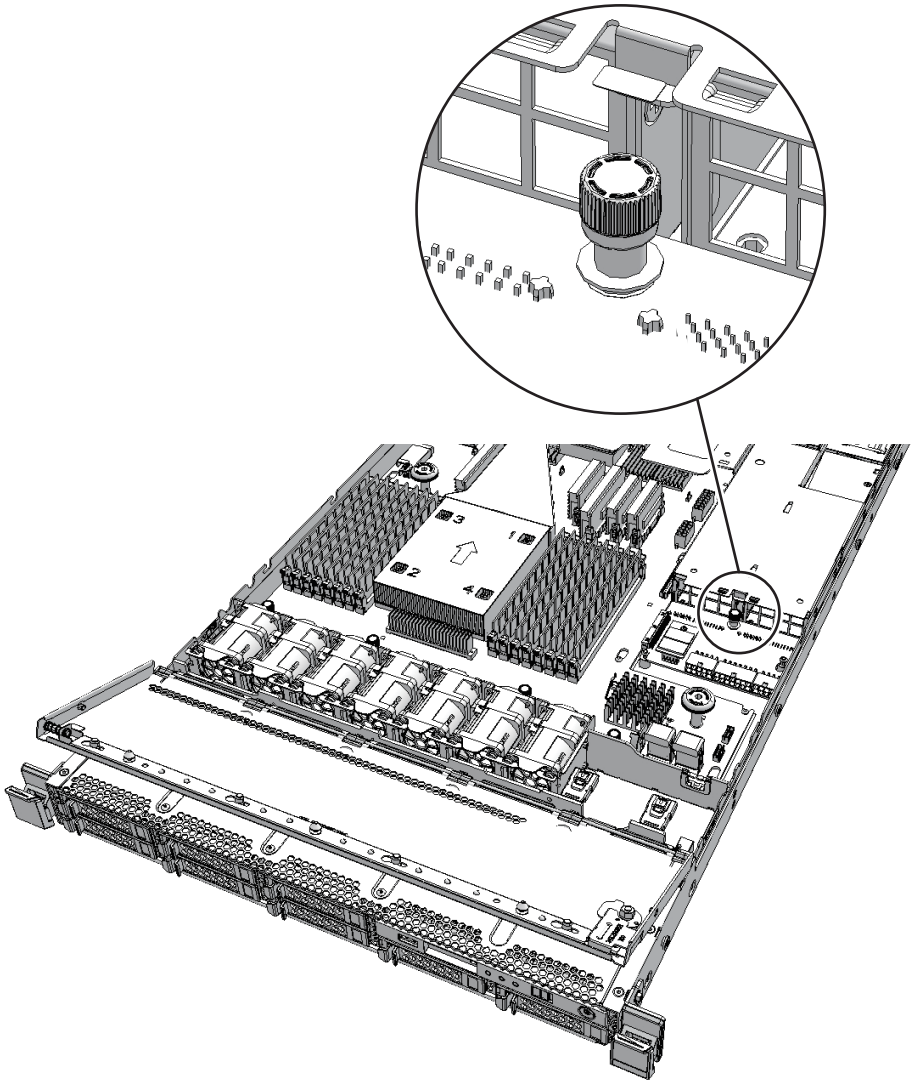

5. **Slide the PSU backplane toward the rear of the chassis to release it from the two fixing pins (A in Figure 13-5).**

Figure 13-5 Fixing pins of PSU backplane

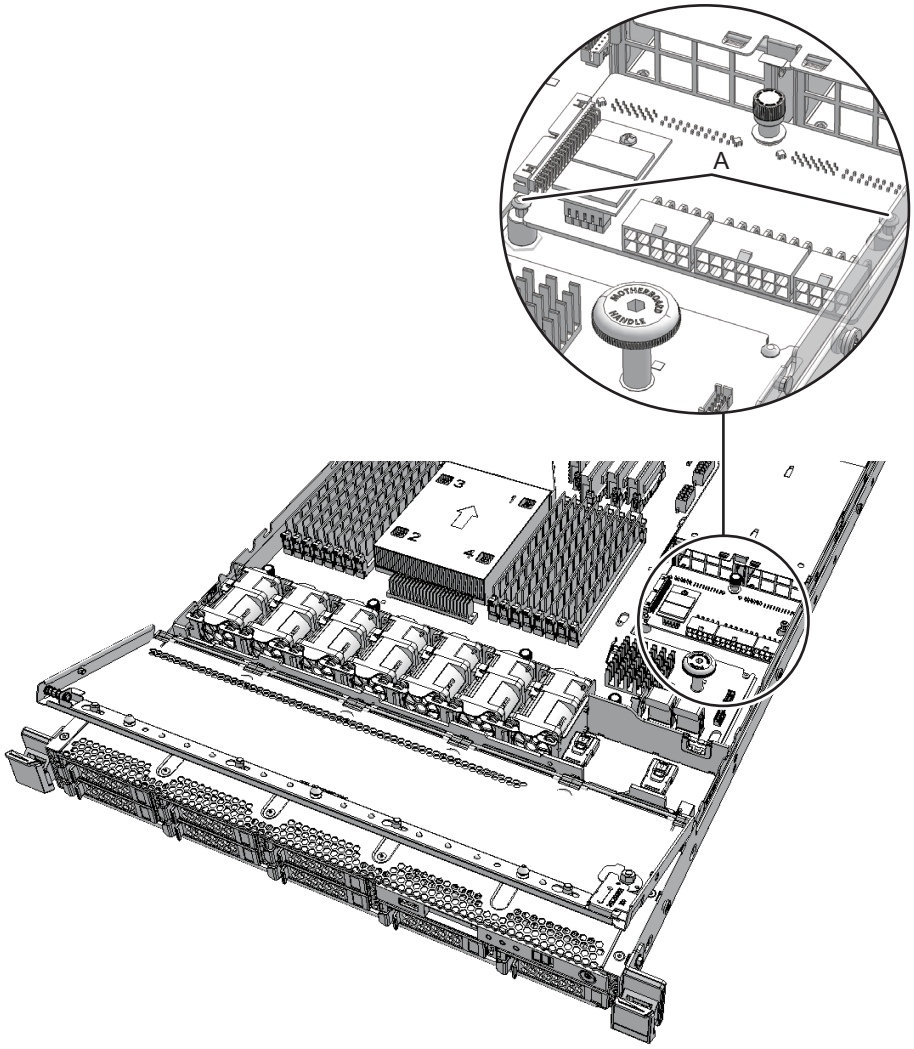

6. **Lift the PSU backplane and disconnect the four cables (A in Figure 13-6) connected to the PSU backplane.**

Note - Record the positions of the cables before removing them to ensure that they are reinstalled correctly.
Note - Place the removed PSU backplane on a grounded antistatic ESD mat.

Figure 13-6 PSU backplane cables

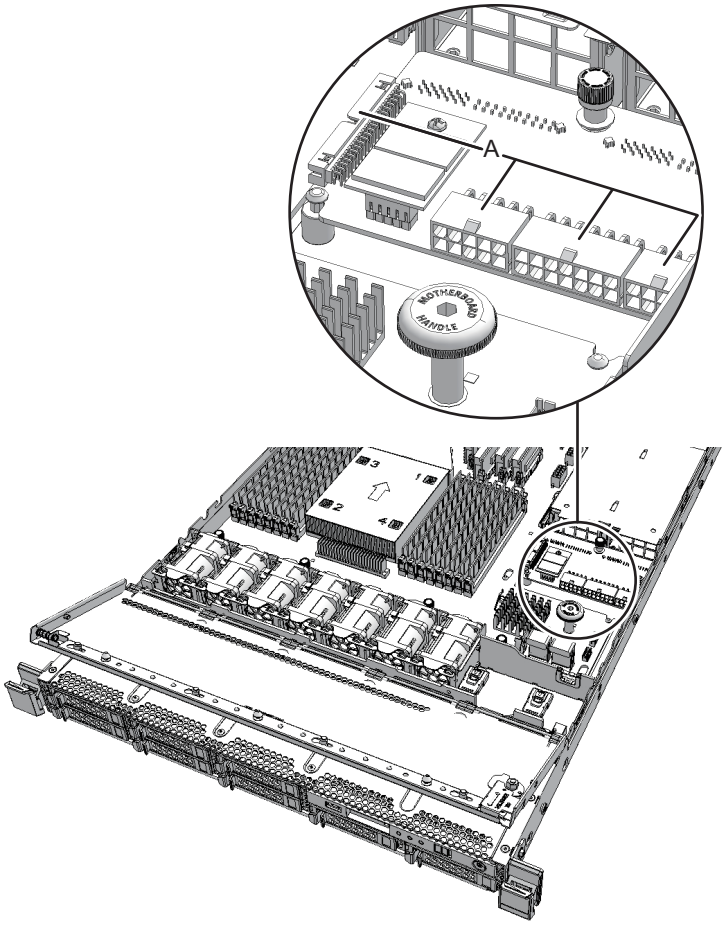

13.4 Installing the Cable Kit

This section describes the procedure for connecting the cable kit.

13.4.1 Installing the cable kit

1. **Lift the PSU backplane and connect the four cables (A in Figure 13-7) to the PSU backplane.**

Figure 13-7 Cable connection locations of the PSU backplane

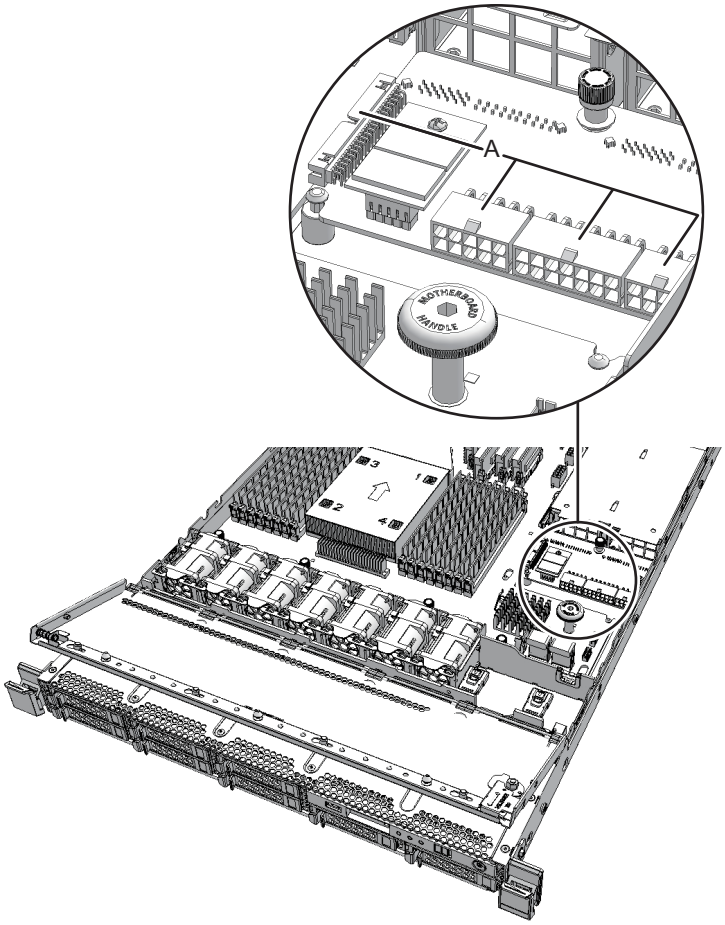

2. **Install the PSU backplane.**
3. **Check that the two fixing pins are inserted into the PSU backplane, and then slide the PSU backplane toward the rear of the chassis.**
4. **Tighten the screw securing the PSU backplane.**
5. **Connect one cable connecting the PSU backplane to the HDD backplane.**

Figure 13-8 HDD backplane cables

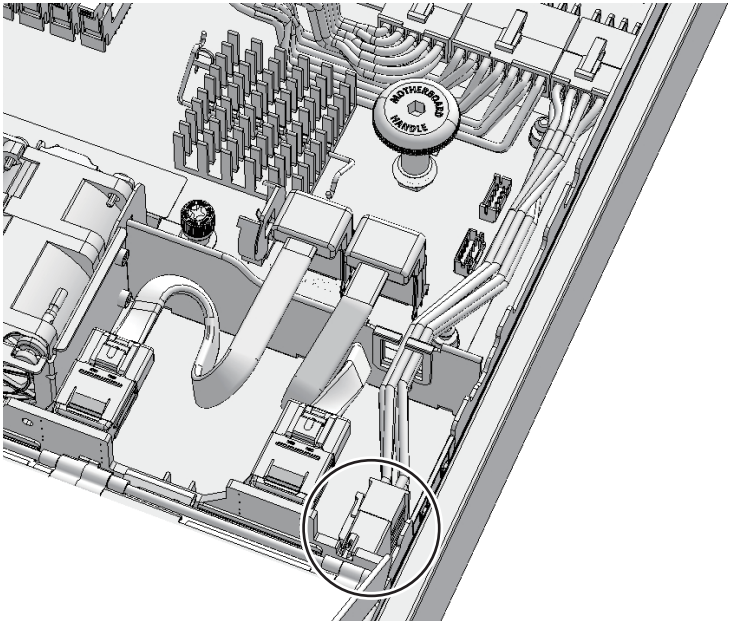

6. **Lock the cable guide after storing the connected cables in the guide.**
   For details, see "6.1.1 Locking the cable guide."

   If the cable guide does not have a lock, then make sure that the cables are stored in the cable guide. For the layout of the cables in the cable guide, see Figure 16-19.

7. **Connect the three cables connecting the PSU backplane to the motherboard unit.**

Note - Connect the cables in their original positions by referring to the record that you made before the start of maintenance.
Note - Make sure that each cable is firmly inserted.

Figure 13-9 Motherboard unit cables

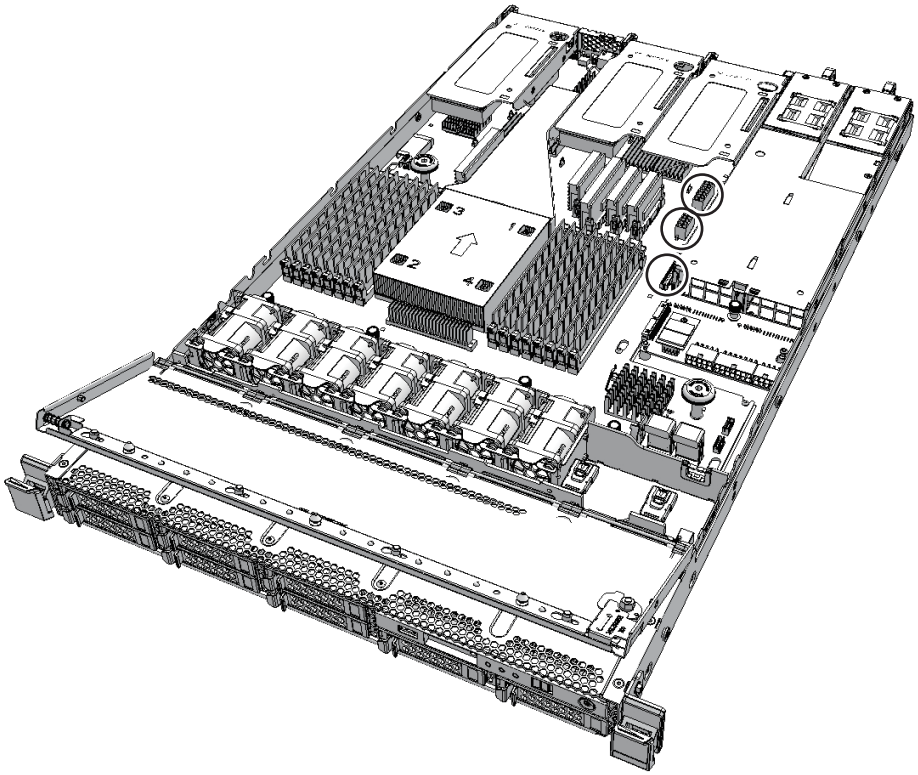

13.4.2 Restoring the chassis

1. **Install the air duct and the PSU backplane cover.**
   For details, see "6.1.2 Installing the air duct and PSU backplane cover."
2. **Install the upper cover.**
   For details, see "6.1.3 Installing the upper cover."
3. **Close the fan cover.**
   For details, see "6.1.4 Closing the fan cover."
4. **Install all the power supply units.**
   For details, see "11.4 Installing a Power Supply Unit."

The FRU installation work is completed. See "Chapter 7 Maintenance Flow" to continue maintenance work.

Chapter 14

Maintaining the Operation Panel

This chapter describes the maintenance procedure for the operation panel.

- Before Maintaining the Operation Panel
- Operation Panel Location
- Removing the operation panel
- Installing the operation panel

14.1 Before Maintaining the Operation Panel

This chapter only has descriptions of the operation panel location and the work of removing and installing the operation panel.
Before removing an FRU, see "Chapter 7 Maintenance Flow" and perform the necessary work items.
For the types of maintenance on the operation panel, also see "Operation panel" in "Table 7-2 Maintenance types for FRUs."

14.2 Operation Panel Location

This section describes the location of the operation panel.

Figure 14-1 Location of the operation panel

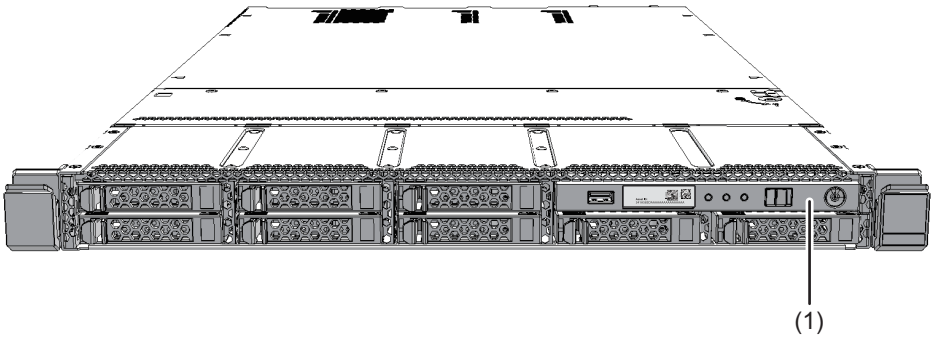

Location number	Component
1	Operation panel (OPNL)

14.3 Removing the Operation Panel

This section describes the procedure for removing the operation panel.
Enable the removal of the operation panel before attempting to remove it. For details, see "Chapter 7 Maintenance Flow."

Caution - Before you handle any components, wear a wrist strap to ground any static electricity. If you perform this procedure without a wrist strap, individual components or the overall system may be damaged. For details, see "1.4 Precautions on Static Electricity."

14.3.1 Accessing the operation panel

1. **Pull the chassis out of the rack.**
   For details, see "5.8.3 Pulling the chassis out from the rack."
2. **Open the fan cover.**
   For details, see "5.8.4 Opening the fan cover."
3. **Remove the upper cover.**
   For details, see "5.8.5 Removing the upper cover."

14.3.2 Removing the operation panel

1. **Remove the two cables from the motherboard unit that connect the operation panel to the motherboard unit.**

Note - Record the positions of the cables before removing them to ensure that they are reinstalled correctly.

Figure 14-2 Operation panel cables

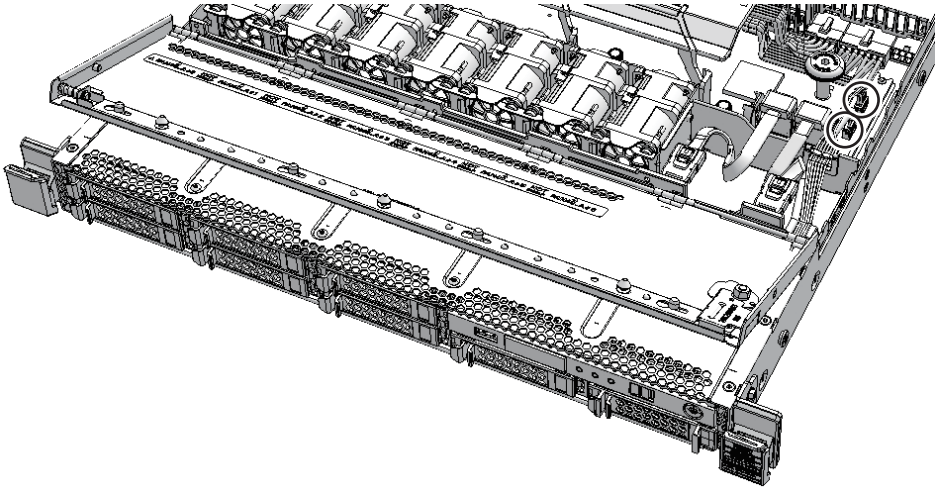

2. **Pull the operation panel to the front of the chassis while pressing the lever (A in Figure 14-3) at the back of the operation panel.**

Figure 14-3 Operation panel lever

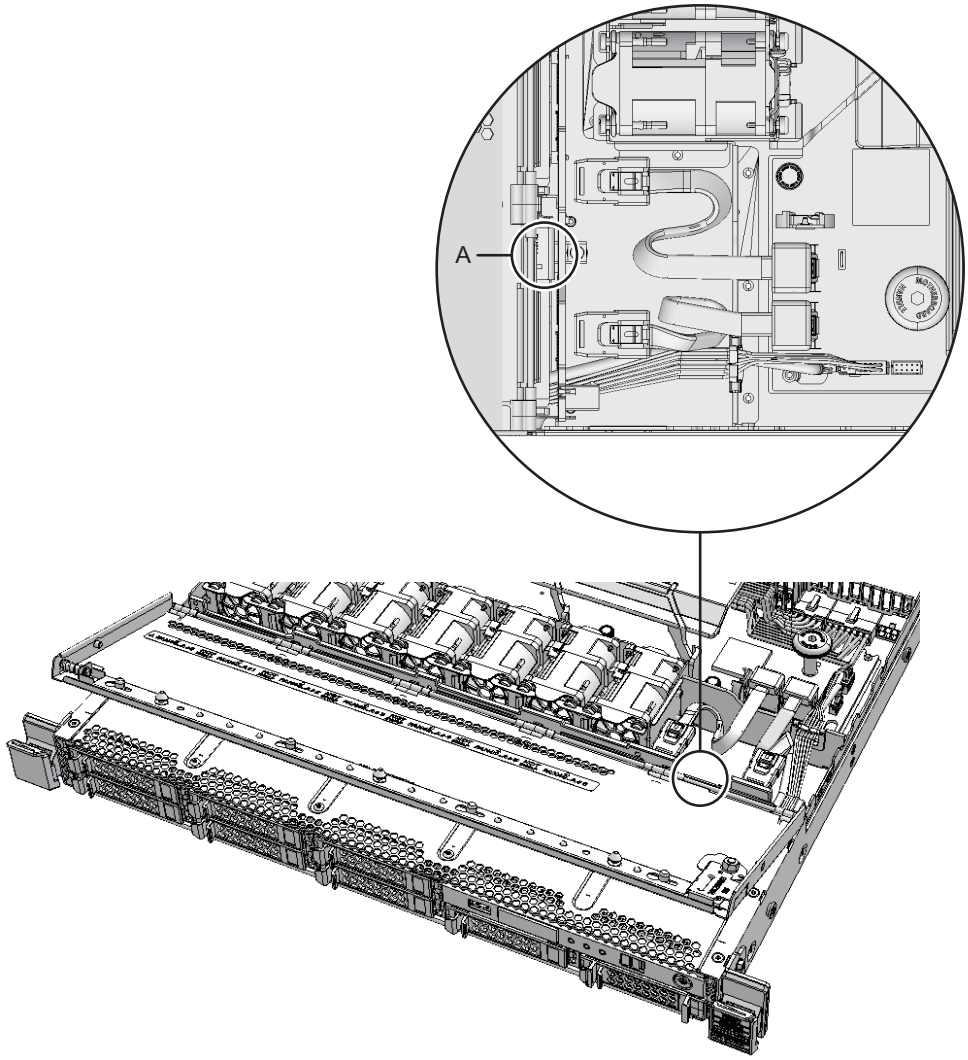

3. **Remove the operation panel while being careful not to damage any cables.**

Note - Place the removed operation panel on a grounded antistatic ESD mat.

14.4 Installing the Operation Panel

This section describes the procedure for installing the operation panel.

14.4.1 Installing the operation panel

1. **Change the mode switch of the operation panel to Service mode.**
2. **Place the operation panel at the mounting location, and then run the cables from the front of the chassis and insert them.**
3. **Push the operation panel firmly into place.**

Note - Confirm that the operation panel has been securely installed and fixed.

---

4. **Connect the two cables from the operation panel to the motherboard unit.**

Note - Connect the cables in their original positions by referring to the record that you made before the start of maintenance.
Note - When connecting the cables, insert them firmly. If there is a loose connection, the motherboard unit will be unable to access the operation panel, resulting in an XSCF startup error.

Figure 14-4 Operation panel cables

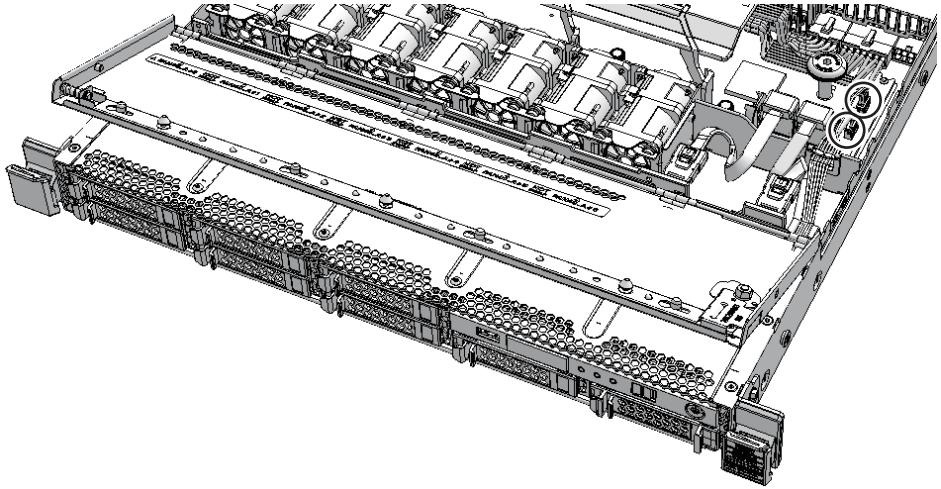

14.4.2 Restoring the chassis

1. **Install the upper cover.**
   For details, see "6.1.3 Installing the upper cover."
2. **Close the fan cover.**
   For details, see "6.1.4 Closing the fan cover."

3. **Put the chassis into the rack.**
   For details, see "6.1.5 Putting the chassis into the rack."

The FRU installation work is completed. See "Chapter 7 Maintenance Flow" to continue maintenance work.

Chapter 15

Maintaining the Fan Units

This chapter describes the maintenance procedure for the fan units.

- Before Maintaining a Fan Unit
- Configuration of the Fan Units
- Removing a fan unit
- Installing a fan unit

15.1 Before Maintaining a Fan Unit

This chapter only has descriptions of the fan unit configuration and the work of removing and installing fan units.
Before removing an FRU, see "Chapter 7 Maintenance Flow" and perform the necessary work items.
For the types of maintenance on fan units, also see "Fan unit" in "Table 7-2 Maintenance types for FRUs."

15.2 Configuration of the Fan Units

This section describes the configuration and the locations of the fan units.
Seven fan units are installed in a chassis. If an error occurs in a fan unit, XSCF detects the error. The 6 + 1 redundant configuration of the fan units allows the system to continue operating even if one fan unit fails.

Figure 15-1 Locations of fan units

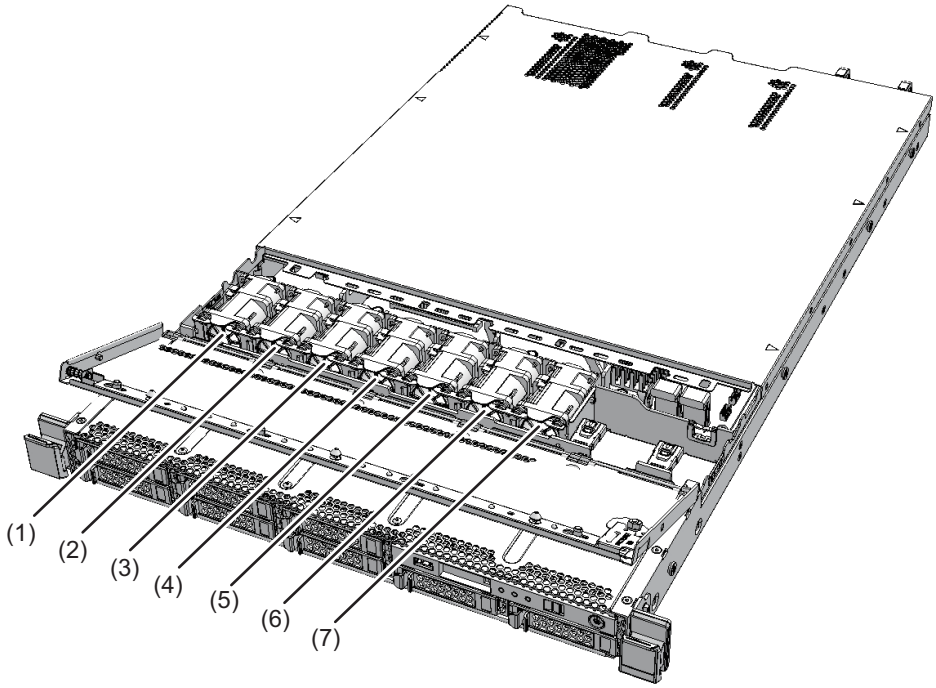

Location number	Component
1	Fan unit (FAN#0)
2	Fan unit (FAN#1)
3	Fan unit (FAN#2)
4	Fan unit (FAN#3)
5	Fan unit (FAN#4)
6	Fan unit (FAN#5)
7	Fan unit (FAN#6)

15.3 Removing a Fan Unit

This section describes the procedure for removing a fan unit.
Enable the removal of the fan unit before attempting to remove it. For details, see "Chapter 7 Maintenance Flow."

Caution - Before you handle any components, wear a wrist strap to ground any static electricity. If you perform this procedure without a wrist strap, individual components or the overall system may be damaged. For details, see "1.4 Precautions on Static Electricity."

15.3.1 Accessing a fan unit

1. **Pull the chassis out of the rack.**
   For details, see "5.8.3 Pulling the chassis out from the rack."
2. **Open the fan cover.**
   For details, see "5.8.4 Opening the fan cover."

15.3.2 Removing a fan unit

1. **Pinch the front and rear faces of the fan unit to be replaced, and pull it up to remove it.**

Note - Place the removed fan unit on a grounded antistatic ESD mat.

Figure 15-2 Removal of fan unit

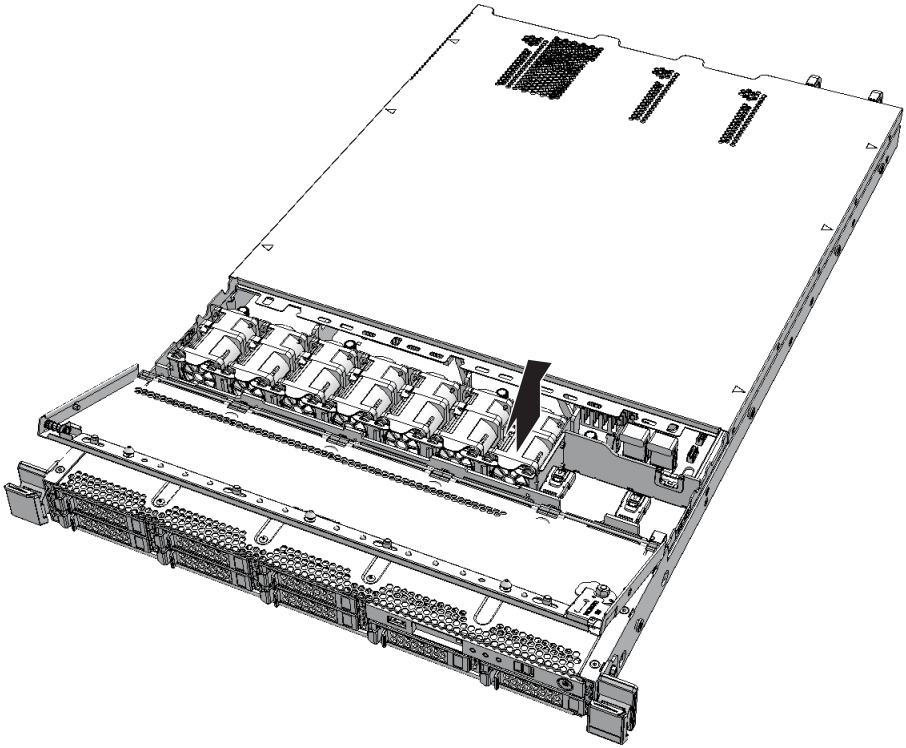

15.4 Installing a Fan Unit

This section describes the procedure for installing a fan unit.

15.4.1 Installing a fan unit

1. **Install a fan unit into its slot vertically.**

Note - Do not force a fan unit into its slot. Using excessive force may damage the component or the chassis.

---

2. **Push the fan unit in firmly while aligning the connector on the back of the fan unit with the connector on the motherboard unit.**

Note - Check that the fan unit is firmly inserted and secured.

15.4.2 Restoring the chassis

1. **Close the fan cover.**
   See "6.1.4 Closing the fan cover."
2. **Put the chassis into the rack.**
   See "6.1.5 Putting the chassis into the rack."

The FRU installation work is completed. See "Chapter 7 Maintenance Flow" to continue maintenance work.

Chapter 16

Maintaining the Motherboard Unit/Memory

This chapter describes the procedures for maintaining the motherboard unit and memory.

16.1 Before Maintaining the Motherboard Unit/Memory

This chapter only has descriptions of the motherboard unit/memory location and the work of removing and installing the motherboard unit/memory.
Before removing an FRU, see "Chapter 7 Maintenance Flow" and perform the necessary work items.
For the types of maintenance on the motherboard unit/memory, also see "Motherboard unit" and "Memory" in "Table 7-2 Maintenance types for FRUs."

16.2 Motherboard Unit Location

This section explains the location of the motherboard unit.
A single motherboard unit is mounted in each chassis.

Figure 16-1 Location of the motherboard unit

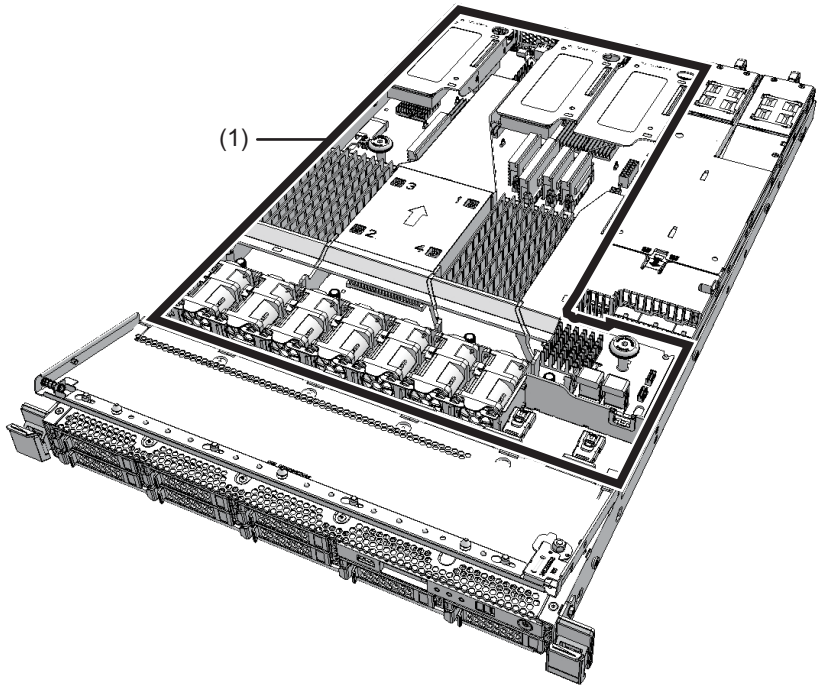

Location number	Component
1	Motherboard unit (MBU)

16.3 Memory Locations

This section describes the configuration and location of memory.
Memory is installed on a motherboard unit and divided into group A and group B. Up to eight memory modules can be installed for each group, up to a total of 16 memory modules.

Figure 16-2 Locations of memory

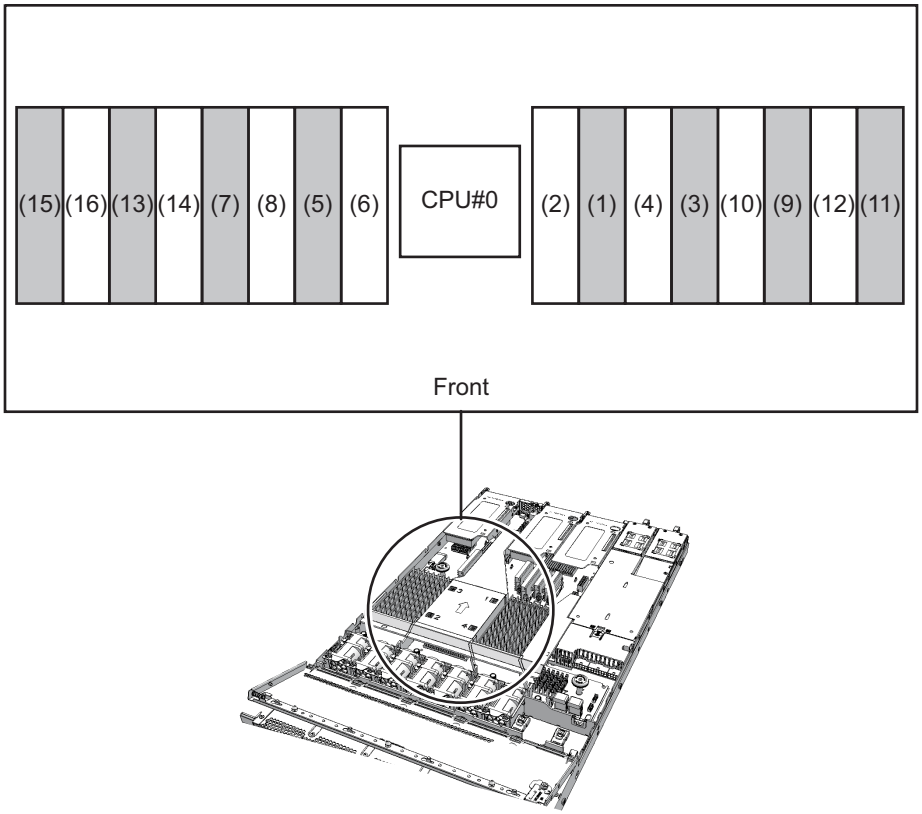

Location number	Component	Group
1	Memory (MEM#00A)	A
2	Memory (MEM#00B)	B
3	Memory (MEM#01A)	A
4	Memory (MEM#01B)	B
5	Memory (MEM#02A)	A
6	Memory (MEM#02B)	B
7	Memory (MEM#03A)	A
8	Memory (MEM#03B)	B
9	Memory (MEM#10A)	A
10	Memory (MEM#10B)	B
11	Memory (MEM#11A)	A
12	Memory (MEM#11B)	B
13	Memory (MEM#12A)	A

Location number	Component	Group
14	Memory (MEM#12B)	B
15	Memory (MEM#13A)	A
16	Memory (MEM#13B)	B

16.4 Precautions for Motherboard Unit Replacement

Note the following points when replacing the motherboard unit.

- Do not replace the motherboard unit and the PSU backplane at the same time. If you replace the motherboard unit and the PSU backplane at the same time, the system may fail to operate correctly. Replace the motherboard unit or the PSU backplane, and then execute the showhardconf or showstatus command to verify that the replaced Field Replaceable Unit (FRU) is fully operational. Then, replace the other FRU.
- The CPU and XSCF on the motherboard unit cannot be replaced individually. Replace the motherboard unit.
- When replacing the motherboard unit, the memory should be removed from the old unit and remounted on the new unit. Always mount the memory modules in the same locations as they were mounted on the old motherboard unit.
- Before replacing the motherboard unit, execute the dumpconfig command to save the system setting information. When the motherboard unit is replaced, the CPU Activation setting information and CPU Activation key may be deleted. To restore the CPU Activation setting information and CPU Activation key that have been saved with the dumpconfig command, execute the restoreconfig command. For details, see "10.10 Saving/Restoring XSCF Settings Information" in the *Fujitsu SPARC M12 and Fujitsu M10/SPARC M10 System Operation and Administration Guide*.
- Set the system time.
  After replacement of the motherboard unit has been completed, set the system time. For details, see "Notes on Maintenance of a CPU Memory Unit, Motherboard Unit, XSCF Unit, PSU Backplane, or Crossbar Backplane Unit" in the *Fujitsu M10/SPARC M10 Systems Product Notes* for the latest XCP version.
- Check the XCP version.
  If you replace the motherboard unit and switch the microSD card, the CMU firmware versions displayed for the current and reserve XCPs by the version command do not match when you check the XCP firmware version after executing the testsb command. This does not affect system operation. If you start the system when the current and reserve XCPs have been switched, the CMU firmware stored on the microSD card is automatically applied.
- The type of motherboard unit varies depending on the number of CPU clocks.

- If you replace the microSD card along with the motherboard unit, dispose of the microSD card mounted on the old motherboard unit by appropriate means such as cutting it with cutting pliers. The old microSD card stores the user information, IP address, and other information set in the XSCF firmware.

16.5 Removing the Motherboard Unit and Memory

This section describes the procedure for removing the motherboard unit.
Enable removal of the motherboard unit prior to attempting to remove it. For details, see "Chapter 7 Maintenance Flow."

Caution - Before you handle any components, wear a wrist strap to ground any static electricity. If you perform this procedure without a wrist strap, individual components or the overall system may be damaged. For details, see "1.4 Precautions on Static Electricity."

16.5.1 Accessing the motherboard unit

1. **Remove all the cables connected to the external interface.**

Note - Record the positions of the cables before removing them to ensure that they are reinstalled correctly.

2. **Pull the chassis out of the rack.**
   For details, see "5.8.3 Pulling the chassis out from the rack."
3. **Open the fan cover.**
   For details, see "5.8.4 Opening the fan cover."
4. **Remove the upper cover.**
   For details, see "5.8.5 Removing the upper cover."
5. **Remove the air duct and the PSU backplane cover.**
   For details, see "5.8.6 Removing the air duct and PSU backplane cover."

16.5.2 Removing memory

This section describes the procedure for removing memory. Perform reduction using the same procedure.
When replacing the motherboard unit, the memory should be removed from the old

unit and remounted on the new unit. Mount the memory in the same memory mounting location as that before replacement.
To remove memory, see "2.2 Checking the Memory Configuration Rules."

Caution - Before you handle any components, wear a wrist strap to ground any static electricity. If you perform this procedure without a wrist strap, individual components or the overall system may be damaged. For details, see "1.4 Precautions on Static Electricity."

---

1. **Move the latch of the memory slot outward, and then remove the memory by pulling it straight up.**

Note - Make a note of the mounting locations of memory before removing them to ensure that they are reinstalled correctly.
Note - Place the removed memory on a grounded antistatic ESD mat.

Figure 16-3 Memory removal

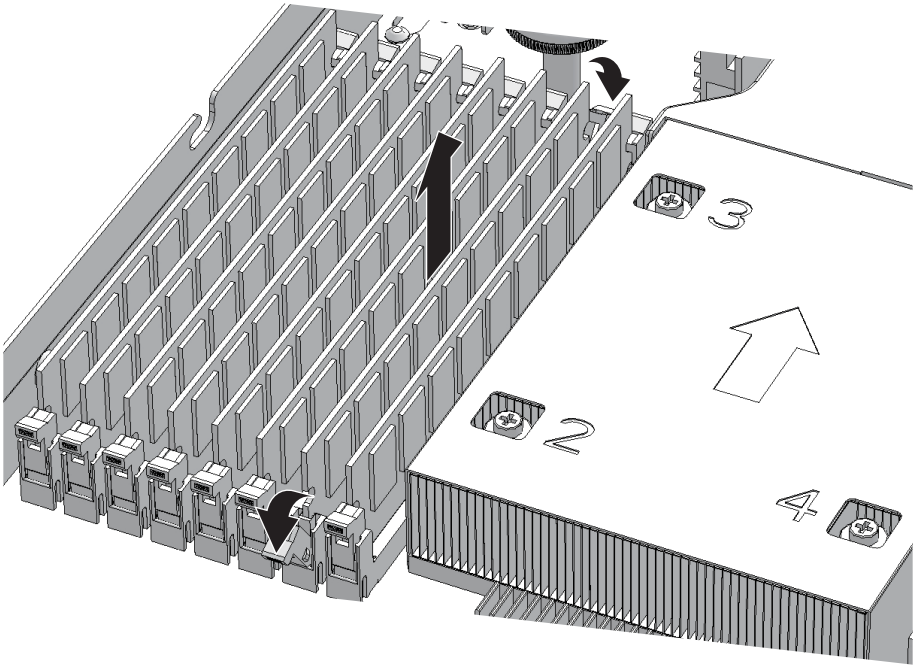

16.5.3 Removing the motherboard unit

Caution - Remove all the memory before removing the motherboard unit. Otherwise, the memory may be damaged.

1. **Remove all the fan units.**
   For details, see "15.3.2 Removing a fan unit."

Note - Make a note of the positions of the fan units before removing them to ensure that they are reinstalled correctly.

2. **Remove all the PCI Express (PCIe) risers.**
   For details, see "8.3.2 Removing a PCI Express riser."

   Removing the PCIe risers enables you to easily remove the cables from the PSU backplane.

Note - Make a note of the mounting locations of the PCIe risers before removing them to ensure that they are reinstalled correctly.

3. **Remove all the memory.**
   For details, see "16.5.2 Removing memory."

Note - Make a note of the mounting locations of memory before removing them to ensure that they are reinstalled correctly.

4. **Release the cable lock guide.**
   For details, see "5.8.7 Releasing the cable guide lock."

   If the cable guide does not have a lock, proceed to step 3.

5. **Remove the cables connected to the motherboard unit.**
   The following cables should be removed:

   a. Three (3) cables on the motherboard unit that connect the PSU backplane to the motherboard unit

   b. One (1) cable that connects the PSU backplane to the HDD backplane
      The cable does not have to be removed from the HDD backplane.

   c. Two (2) cables that connect the HDD backplane to the motherboard unit

   d. Two (2) cables that connect the operation panel to the motherboard unit

Note - Record the positions of the cables before removing them to ensure that they are reinstalled correctly.

Figure 16-4 Cables of the motherboard unit

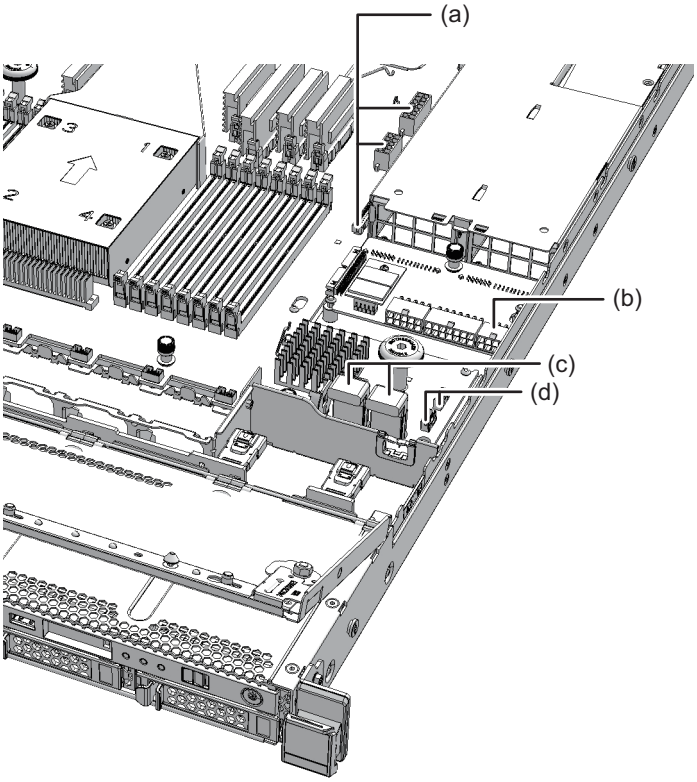

6. **Loosen the five (5) screws securing the motherboard unit.**

Figure 16-5 Screws on the motherboard unit

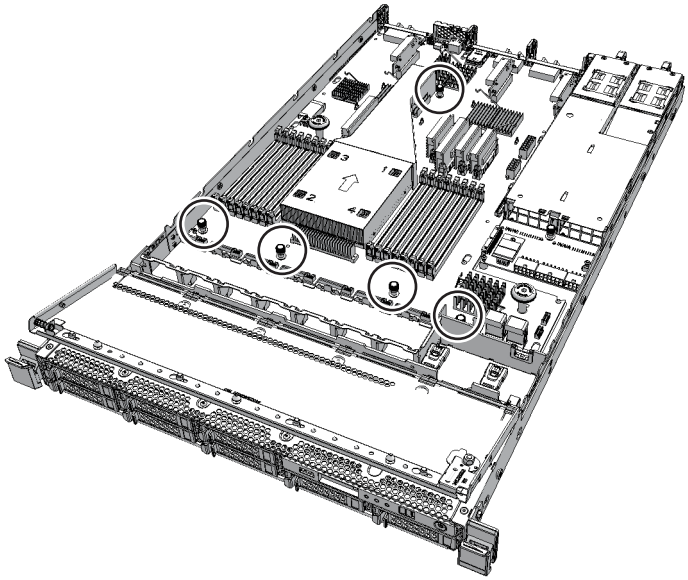

7. **Hold the handles (A in Figure 16-6) of the motherboard unit and slide it out toward the front of the chassis.**
   Check that the motherboard unit is disengaged from the 10 fixing pins.

Figure 16-6 Motherboard unit fixing pins

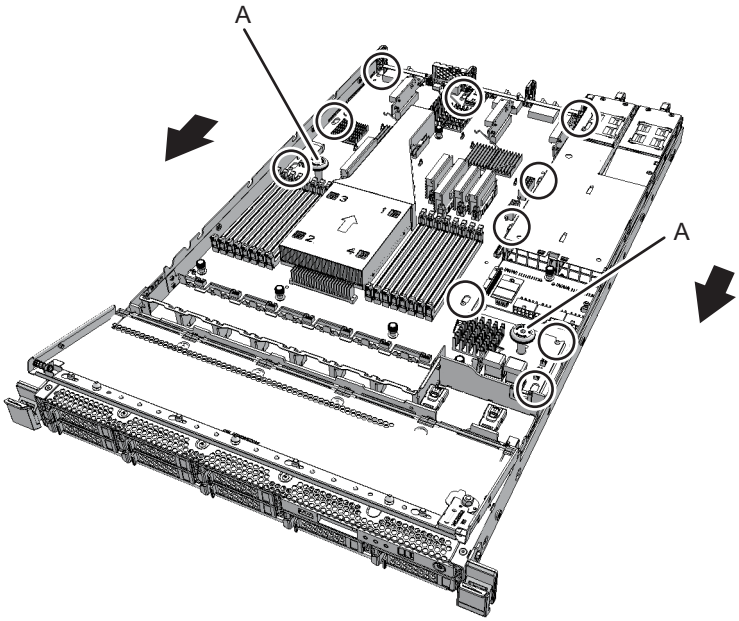

8. **Pull up the motherboard unit to remove it.**

Note - Place the removed motherboard unit on the grounded antistatic ESD mat.

Figure 16-7 Removal of the motherboard unit

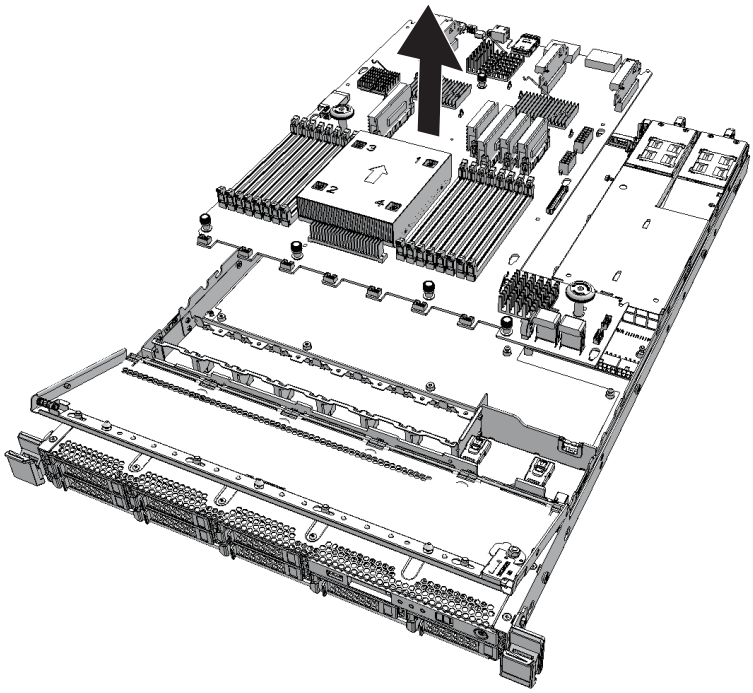

16.5.4 Switching the microSD card

If you replace the motherboard unit, the firmware version may be different from that used before the replacement. To use the same firmware version as that used before the replacement, remove the microSD card from the motherboard unit being replaced, and install it on the replacement motherboard unit.

Note - Use a Torx screwdriver (T10).

---

1. **Remove the screw (A in Figure 16-8) that secures the cover of the microSD card fixed to the removed motherboard unit, and then remove the cover.**

Figure 16-8 Removing the cover

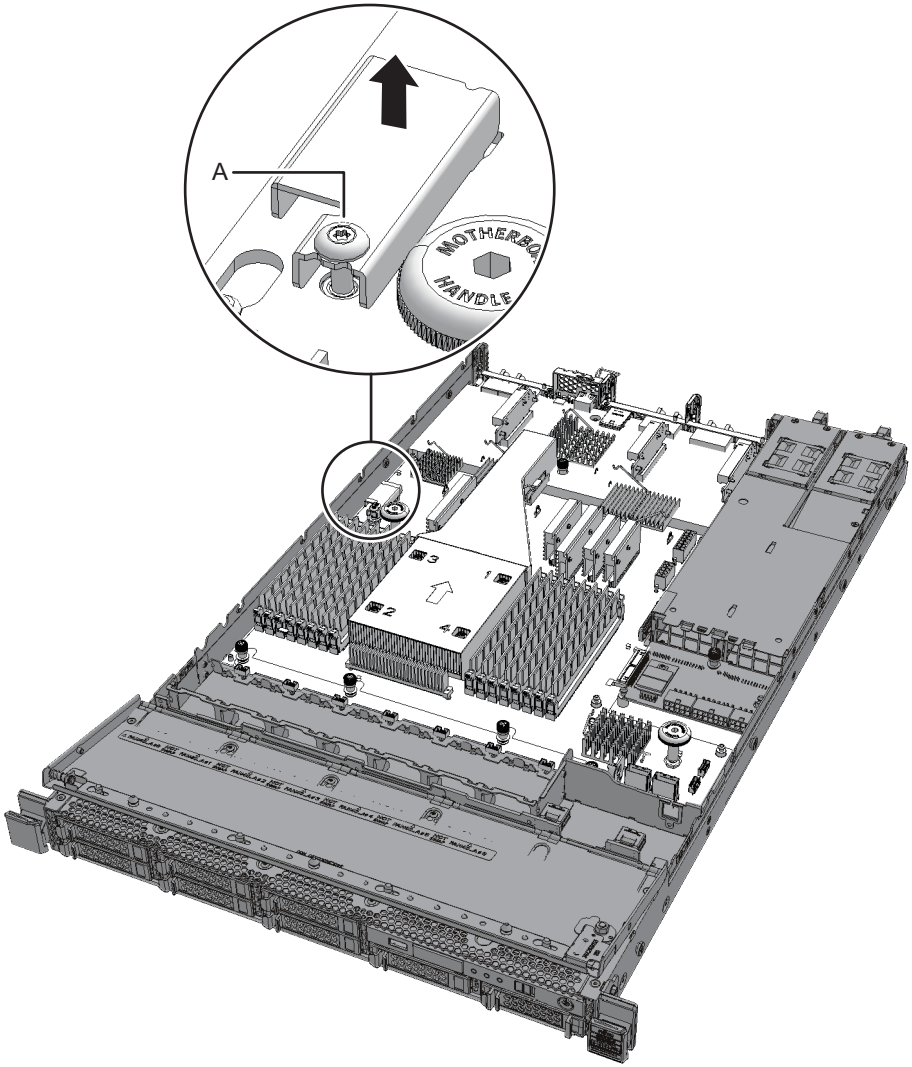

2. **Open the microSD card cover by sliding it toward the rear of the chassis.**

Figure 16-9 Unlocking the cover

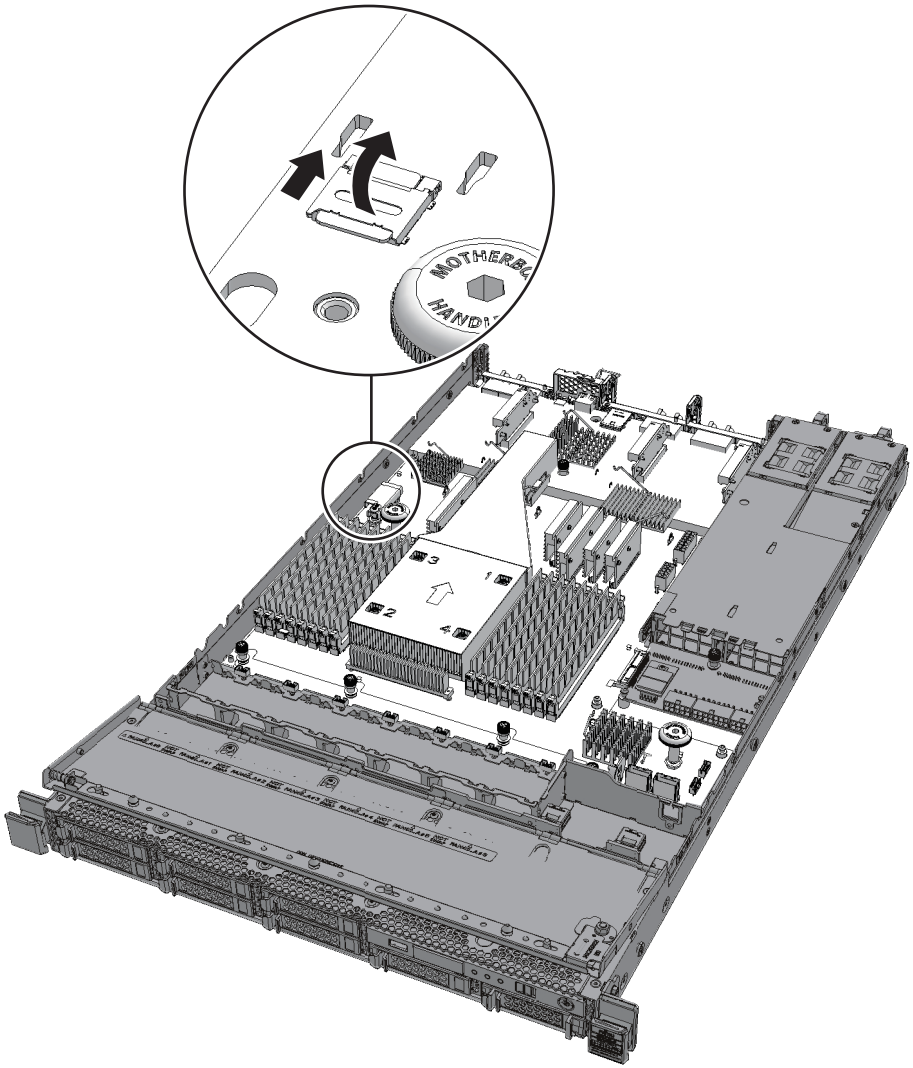

3. **Remove the microSD card.**

Figure 16-10 Removing the microSD card

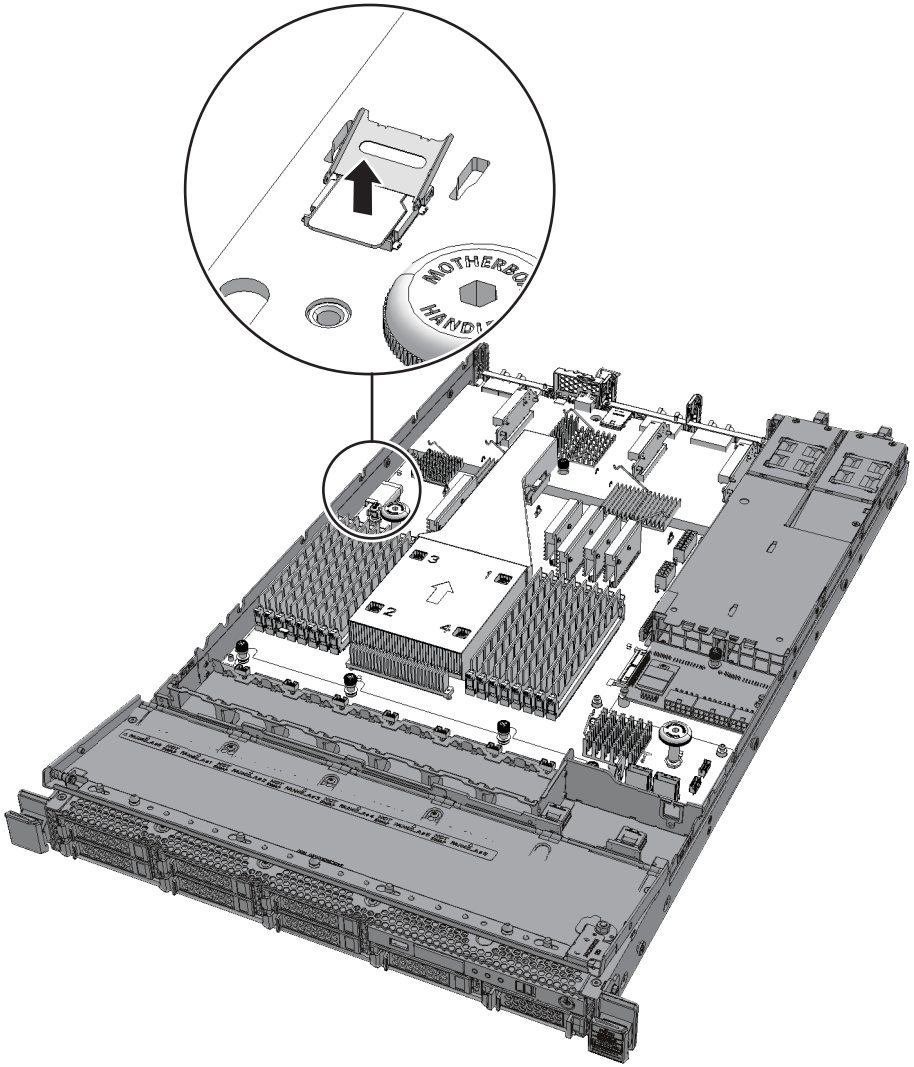

4. **Remove the microSD card in the new motherboard unit.**
   Perform the same procedure as steps 1 to 3.

5. **Place the microSD card that was removed in step 3 into the microSD card slot of the new motherboard unit by aligning it with the shape of the connector.**

Note - Place the microSD card in the connector, with the terminal side of the card facing down.

---

6. **Close the microSD card cover, and lock it by sliding it toward the front of the chassis.**

Figure 16-11 Locking the cover

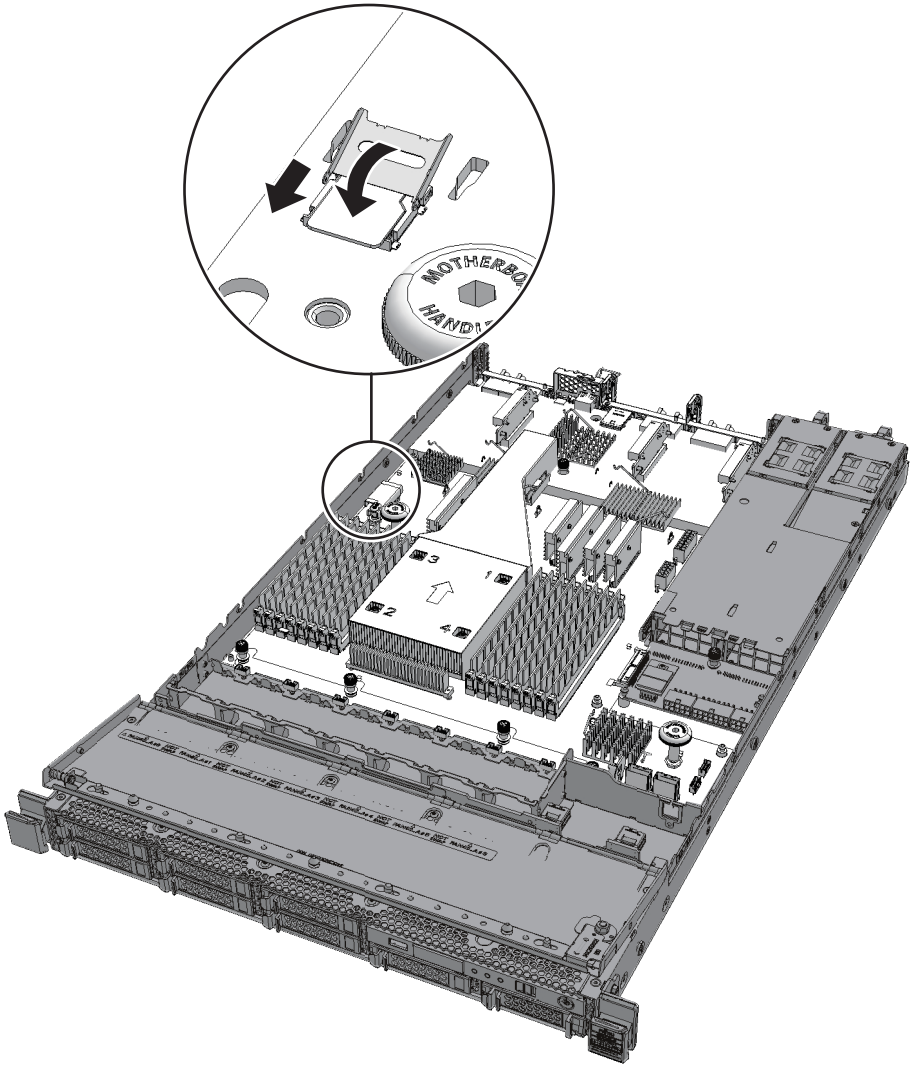

7. **Install the microSD card cover, and then secure it with the screw.**

Note - Return the microSD card that was supplied with the new motherboard unit by installing it in the removed motherboard unit.

16.6 Installing the Motherboard Unit and Memory

This section describes the procedure for installing the motherboard unit.

16.6.1 Installing the motherboard unit

Note - Be careful not to damage the connectors when installing the motherboard unit in the chassis.

---

1. **Install the removed memory on the new motherboard unit.**

Note - Reinstall the memory in their original locations by referring to the notes you made before the start of maintenance.

---

2. **Hold the handles on the motherboard unit and install the motherboard unit in the chassis.**
   Install it from the front of the chassis, aligning it with the mounting location.
3. **Confirm that the 10 fixing pins are inserted into the motherboard unit, and then slide the motherboard unit toward the rear of the chassis.**

Figure 16-12 Motherboard unit fixing pins

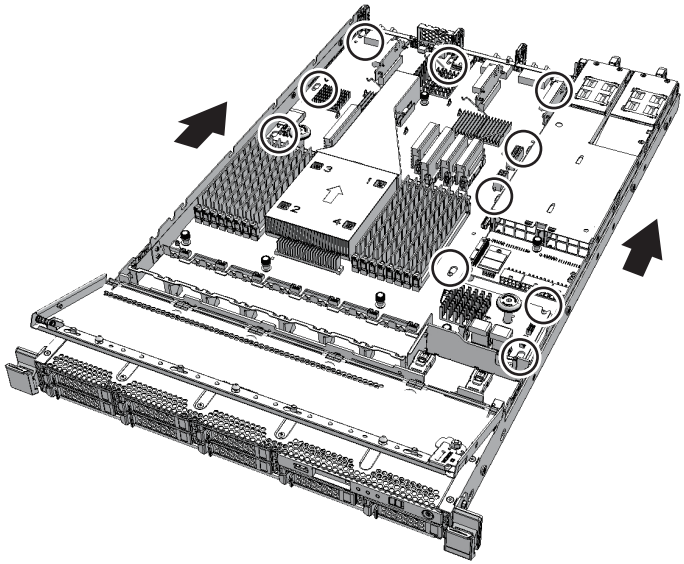

4. **Tighten the five (5) screws securing the motherboard unit.**

Figure 16-13 Screws on the motherboard unit

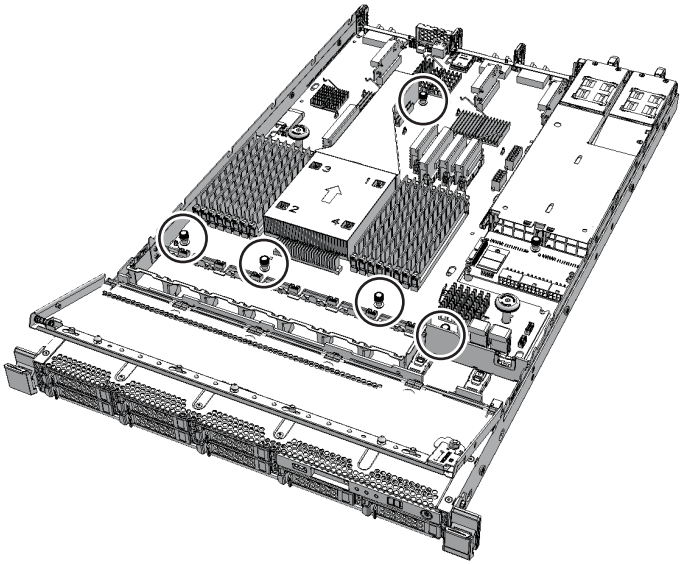

5. **Connect the cables to the motherboard unit.**
   The following cables are to be installed:
   a. Three (3) cables on the motherboard unit that connect the PSU backplane to the motherboard unit
   b. One (1) cable that connects the PSU backplane to the HDD backplane
      Connect the cable to the PSU backplane.
   c. Two (2) cables that connect the HDD backplane to the motherboard unit
   d. Two (2) cables that connect the operation panel to the motherboard unit

---

Note - Reinstall the cables in their original positions by referring to the notes that you made before the start of maintenance.

Figure 16-14 Cables of the motherboard unit

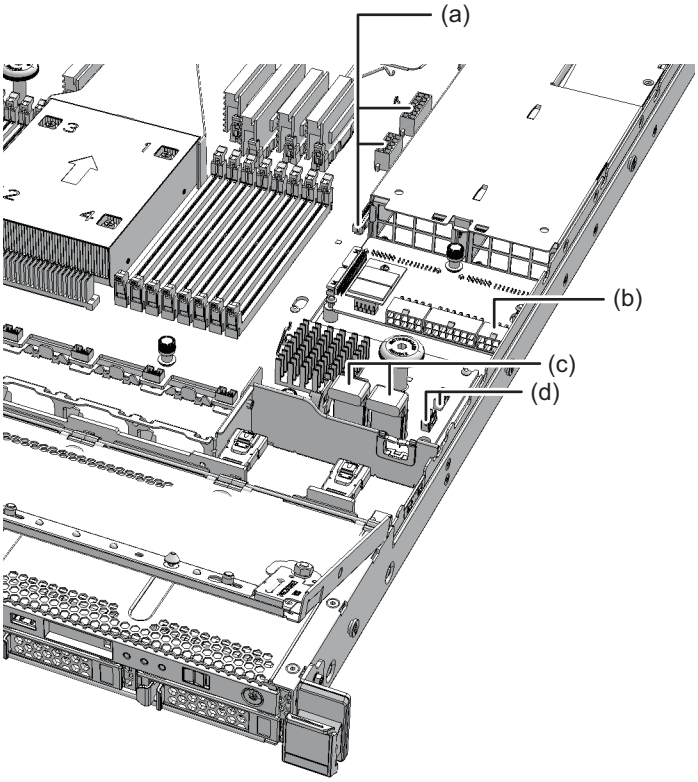

6. **Store the cables of the motherboard unit in the cable guide (A in Figure 16-15).**

Figure 16-15 Location of the cable guide

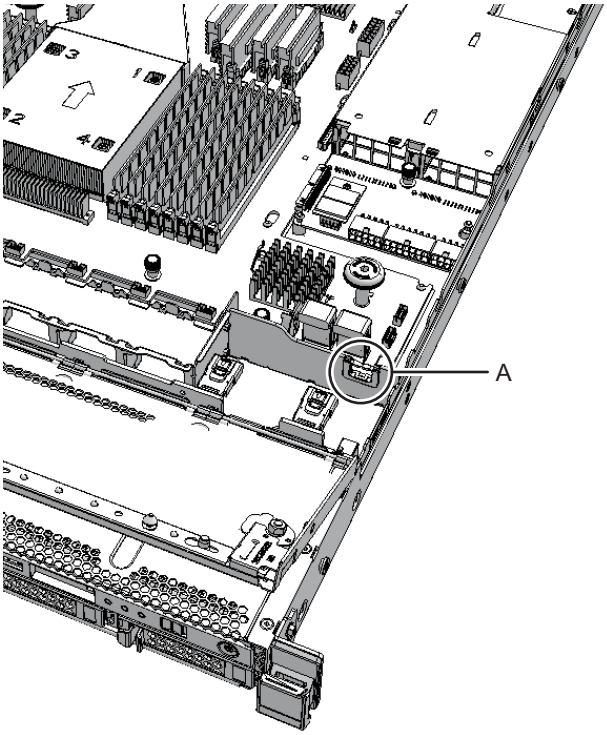

There are two types of cable guides. The procedure varies depending on the type. For the types of cable guides, see Figure 6-1.

Type A

a. Working from the upper part of the cable guide, store the cable (red/black) (A in Figure 16-16) connecting the HDD backplane to the PSU backplane in the guide.

Figure 16-16 Storing cables (red/black)

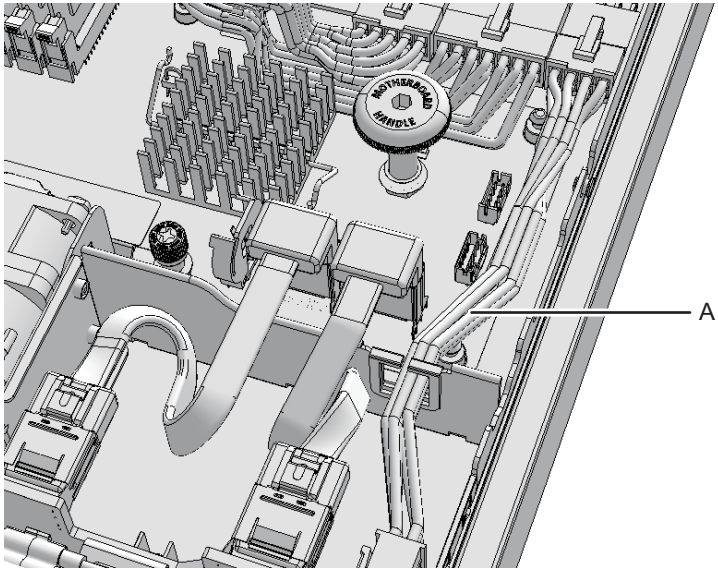

b. Store in the cable guide the cable (black/yellow/white) (B in Figure 16-17) connecting the operation panel to the motherboard unit.

Figure 16-17 Storing cables (black/yellow/white)

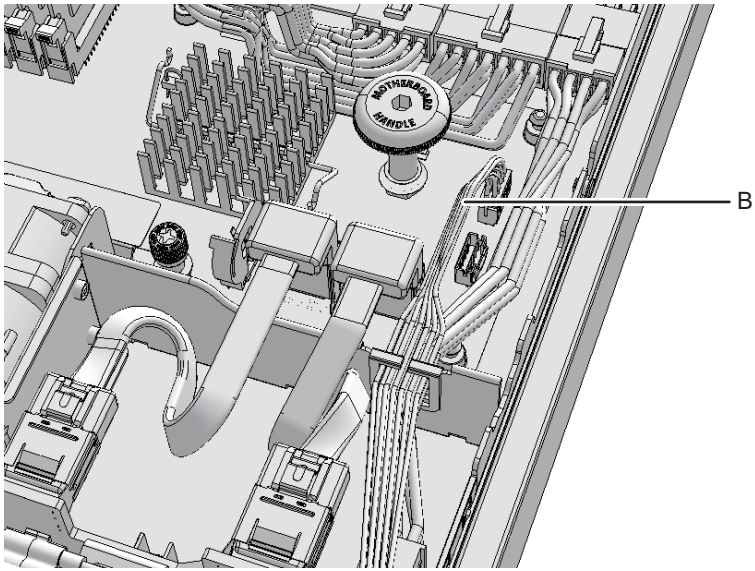

c. From the middle of the clamp in the upper part of the cable guide, pull up one side of the clamp to open it (D in Figure 16-18). Then, store in the cable guide the cable (black) (C in Figure 16-18) connecting the operation panel to the motherboard unit.

Figure 16-18 Storing a cable (black)

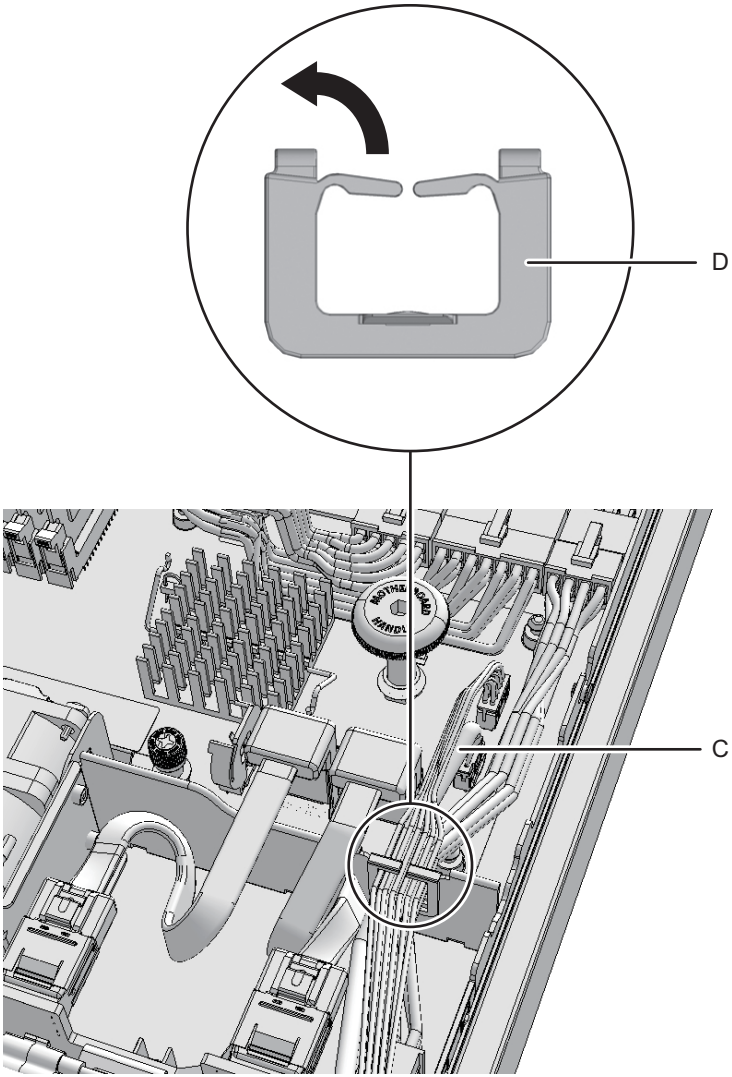

d. Confirm that three cables are stored in the cable guide.
A in Figure 16-19: Cables (red/black) connecting the PSU backplane to the HDD backplane
B in Figure 16-19: Cables (black/yellow/white) connecting the operation panel to the motherboard unit
C in Figure 16-19: Cable (black) connecting the operation panel to the motherboard unit

Figure 16-19 Cable guide after the cables are stored as viewed from the front of the chassis

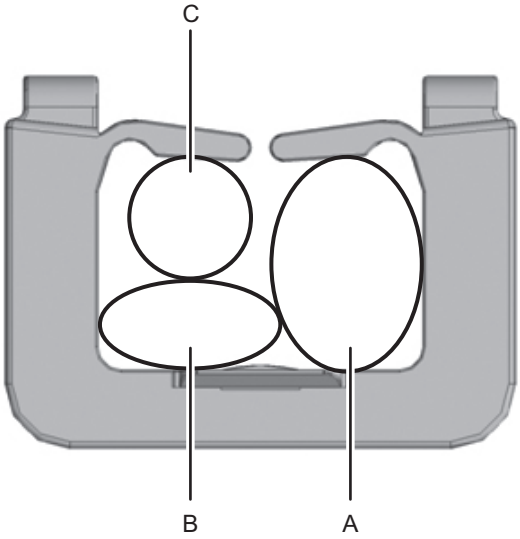

Type B

a. Store in the cable guide one cable (red/black) connecting the PSU backplane to the HDD backplane and two cables (black and black/yellow/white) connecting the operation panel to the motherboard unit.

b. Lock the cable guide.
For details, see "6.1.1 Locking the cable guide."

7. **Install all the PCIe risers.**
For details, see "8.4.2 Installing a PCIe riser."

Note - Reinstall the PCIe risers in their original locations by referring to the notes that you made before the start of maintenance.

---

8. **Install all the fan units.**
For details, see "15.4.1 Installing a fan unit."

Note - Reinstall the fan units in their original locations by referring to the notes that you made before the start of maintenance.

16.6.2 Installing memory

This section describes the procedure for installing memory.
To install memory, see "2.2 Checking the Memory Configuration Rules."

1. **Fit the notched section of the memory into the corresponding position of the connector of the memory slot.**

Note - Reinstall the memory in their original locations by referring to the notes you made before the start of maintenance.

2. **Push the memory module into the slot evenly.**

Note - Confirm that the latch of the memory slot has returned to its original position.

16.6.3 Restoring the chassis

1. **Install the air duct and the PSU backplane cover.**
   For details, see "6.1.2 Installing the air duct and PSU backplane cover."
2. **Install the upper cover.**
   For details, see "6.1.3 Installing the upper cover."
3. **Close the fan cover.**
   For details, see "6.1.4 Closing the fan cover."
4. **Put the chassis into the rack.**
   For details, see "6.1.5 Putting the chassis into the rack."
5. **Connect all the cables of the external interface.**

Note - Reinstall the cables in their original positions by referring to the notes that you made before the start of maintenance.

6. **Disconnect the XSCF LAN cables, and connect the serial cable.**
7. **Connect the power cords of the chassis requiring maintenance at their original positions.**
   For details, see "6.1.6 Installing the power cords."

Note - Reinstall the power cords in their original positions by referring to the notes that you made before the start of maintenance.

Note - The XSCF STANDBY LED (green) on the operator panel blinks when the power cords are connected. As the LED blinks, wait a moment for it to stay on. This indicates that XSCF initialization completed successfully.

8. **Log in to the XSCF via the serial port.**
9. **Set the XSCF time.**
   For details on the procedure, see "6.3.1 Setting the time."
10. **Confirm that the XSCF restarts, and then connect the XSCF LAN cable.**

Note - Reinstall the cables in their original positions by referring to the notes that you made before the start of maintenance.

11. **Match the XCP firmware version with the pre-replacement version.**
    For details on the procedure, see "6.3.2 Confirming the firmware version."

The FRU installation work is completed. See "Chapter 7 Maintenance Flow" to continue maintenance work.

Appendix A

Component List

This appendix describes the components constituting the SPARC M10-1. Figure A-1 shows the locations of the components mounted in the chassis.

Figure A-1 Locations of components

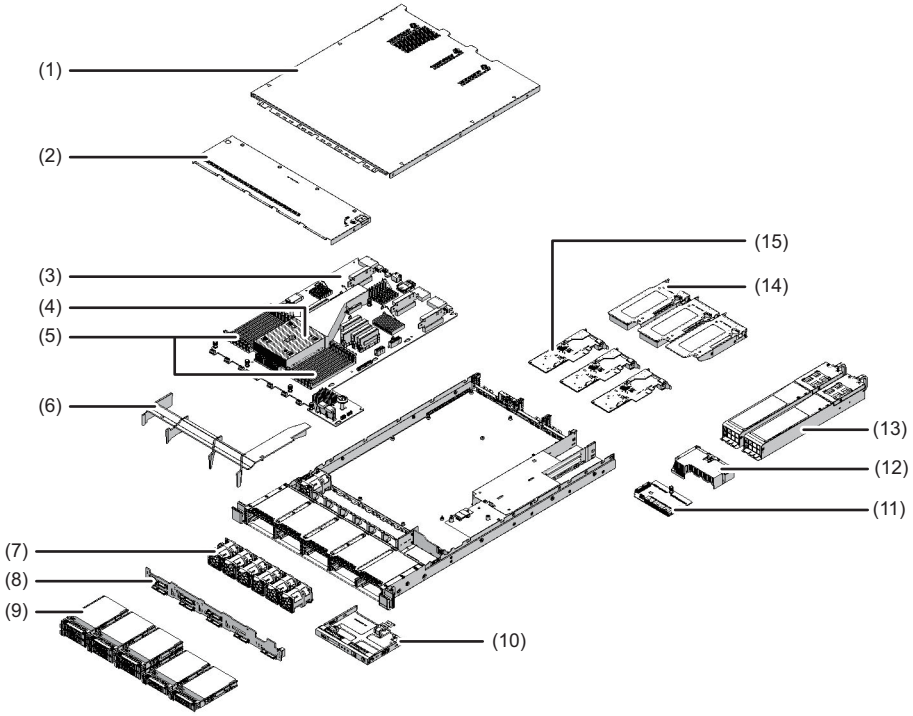

Location number	Component
1	Upper cover

Location number	Component
2	Fan cover
3	Motherboard unit
4	CPU
5	Memory
6	Air duct
7	Fan unit
8	HDD backplane
9	Internal disk
10	Operation panel
11	PSU backplane
12	PSU backplane cover
13	Power supply unit
14	PCI Express riser
15	PCI Express card

Appendix B

Component Specifications

This appendix provides the specifications of the components.

- Motherboard Unit
- Power Supply Unit
- Fan Unit
- Internal Disk
- PCI Express Card
- Backplanes
- Operation Panel

B.1 Motherboard Unit

The motherboard unit consists of the following components:

- CPU
- Memory
- XSCF
- PCI Express (PCIe) card
- Fan unit

Power is supplied from the power supply unit to the motherboard unit. Stop the system before performing any maintenance work on the motherboard unit. Perform maintenance work from the top of the chassis.
For the maintenance procedure, see "Chapter 16 Maintaining the Motherboard Unit/Memory."

B.2 Power Supply Unit

The power supply units take input power and supply it to the system. The redundant configuration of the power supply units allows the system to continue operating even if one of the units fails.
Table B-1 lists the specifications of the power supply units.

Table B-1 Power supply unit specifications

Item	Description
Number of power supply units	2
Redundancy	1+1 redundant configuration
Location	Rear of chassis
Active/hot maintenance	Supported
System-stopped (inactive)/hot maintenance	Supported
System-stopped (inactive)/cold maintenance	Supported

For the maintenance procedure, see "Chapter 11 Maintaining the Power Supply Units."

B.3 Fan Unit

The chassis is fitted with seven cooling fan units. If a fan unit failure occurs, XSCF detects the error. The redundant configuration of the fan units allows the system to continue running even if a fan unit fails.
Table B-2 lists the specifications of the fan unit.

Table B-2 Fan unit specifications

Item	Description
Number of fan units	7
Redundancy	6+1 redundant configuration
Location	Rear of internal disk
Active/hot maintenance	Supported
System-stopped (inactive)/hot maintenance	Supported
System-stopped (inactive)/cold maintenance	Supported

For the maintenance procedure, see "Chapter 15 Maintaining the Fan Units."

B.4 Internal Disk

The chassis supports the mounting of up to eight hard disk drives (HDDs) or solid state drives (SSDs).
Table B-3 lists the specifications of the internal disk.

Table B-3 Specifications of internal disk

Item	Description
Number of HDDs/SSDs	8
Interface	SAS
Location	Front of chassis
Active/hot maintenance	Supported (Possible with any device other than the boot device. With a redundant configuration, however, this is also possible with the boot device.)
System-stopped (inactive)/hot maintenance	Supported
System-stopped (inactive)/cold maintenance	Supported

For the maintenance procedure, see "Chapter 9 Maintaining the Internal Disks."

B.5 PCI Express Card

The chassis supports the mounting of up to three low-profile PCIe cards.
Table B-4 lists the specifications of the PCIe card.

Table B-4 PCIe card specifications

Item	Description
Maximum number of PCIe cards	3
Location	Rear of chassis
Active/hot maintenance	Unsupported
System-stopped (inactive)/hot maintenance	Unsupported
System-stopped (inactive)/cold maintenance	Supported

For the maintenance procedure, see "Chapter 8 Maintaining the PCI Express Cards."

B.6 Backplanes

There are the following two types of backplane:

- HDD backplane (A in Figure B-1)
- PSU backplane (B in Figure B-1)

The backplane is a unit with connectors for mounting replaceable units in the chassis. The PSU backplane carries memory that stores identification information and the user setting information.

Figure B-1 Location of HDD backplane

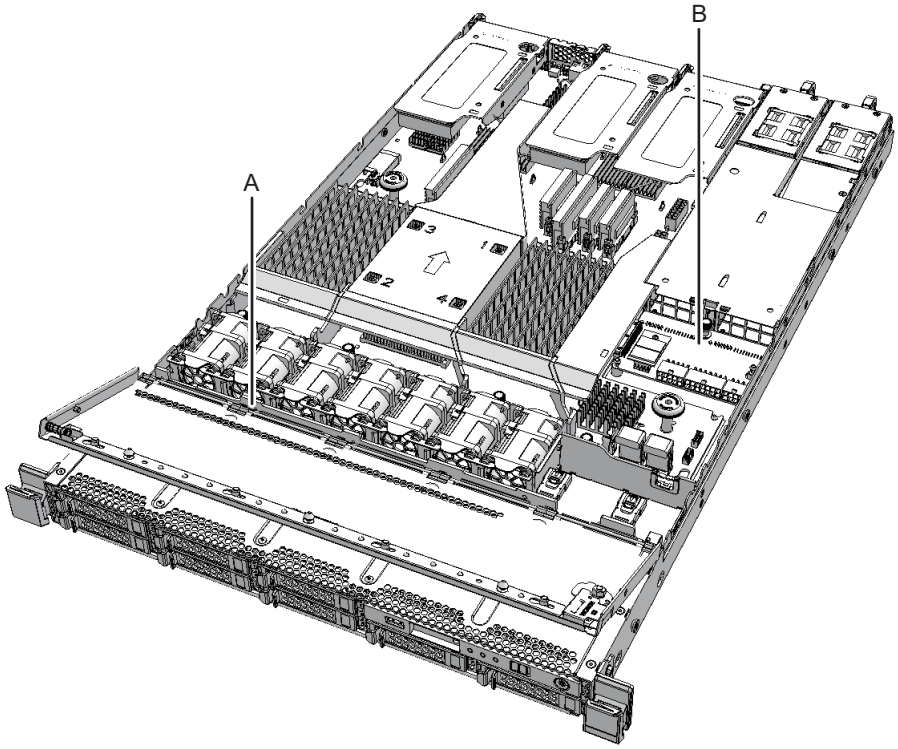

Table B-5 lists the specifications of the HDD backplane, and Table B-6 lists the specifications of the PSU backplane.

Table B-5 Specifications of HDD backplane

Item	Description
Number of HDD backplanes	1
Location	Inside a chassis
Active/hot maintenance	Unsupported

Table B-5 Specifications of HDD backplane *(continued)*

Item	Description
System-stopped (inactive)/hot maintenance	Unsupported
System-stopped (inactive)/cold maintenance	Supported

Table B-6 Specifications of PSU backplane

Item	Description
Number of PSU backplanes	1
Location	Inside a chassis
Active/hot maintenance	Unsupported
System-stopped (inactive)/hot maintenance	Unsupported
System-stopped (inactive)/cold maintenance	Supported

For the maintenance procedure, see "Chapter 12 Maintaining the PSU Backplane" or "Chapter 10 Maintaining the HDD Backplane."

B.7 Operation Panel

The operation panel is installed on the front of the chassis. It displays the system status and is used to operate the system.
Table B-7 lists the specifications of the operation panel.

Table B-7 Specifications of operation panel

Item	Description
Number of operation panels	1
Location	Front of chassis
Active/hot maintenance	Unsupported
System-stopped (inactive)/hot maintenance	Unsupported
System-stopped (inactive)/cold maintenance	Supported

For the maintenance procedure, see "Chapter 14 Maintaining the Operation Panel."

Appendix C

Oracle Solaris Troubleshooting Commands

This appendix describes how to use Oracle Solaris commands to display fault diagnosis information and to take countermeasures. The commands listed here are useful for determining whether there are problems in the system, the network, or some other system connected through the network.

C.1 iostat Command

The iostat command is used to regularly report the CPU usage status, as well as the terminal status, the drive status, and the I/O status.
Table C-1 lists the options of the iostat command and how those options can be applied to solving system issues.

Table C-1 iostat command options

Option	Description	Application
No options	Reports the status of the local I/O device.	Allows you to view the device status concisely in 3 lines.
-c	Reports, as ratios, the length of time that the system has been in user mode, in system mode, waiting for I/O, and idling.	Allows you to view the CPU status as a concise report.

Table C-1 iostat command options *(continued)*

Option	Description	Application
-e	Displays a summary of statistics on device errors. The displayed items are the total number of errors, hardware errors, software errors, and transfer errors.	Allows you to view the accumulated number of errors as a concise table and to identify potentially failed I/O devices.
-E	Displays statistics on all the device errors.	Allows you to view device information (manufacturer, model number, serial number, size, and errors).
-n	Displays the names in a descriptive form.	Allows you to identify devices with a descriptive display.
-x	Reports the extended drive statistics of individual drives. Statistics are displayed in a table format. Similar to the -e option, but differs in that it provides rate information.	Allows you to find internal devices and other I/O devices on the network whose performance is low.

The following example shows the output from the iostat command.

```
# iostat -En
c5t50000393D85129FAd0 Soft Errors: 0 Hard Errors: 0 Transport Errors: 0
Vendor: TOSHIBA  Product: MBF2300RC        Revision: 3706 Serial No:
EB25PC201AL6
Size: 300.00GB <300000000000 bytes>
Media Error: 0 Device Not Ready: 0 No Device: 0 Recoverable: 0
Illegal Request: 0 Predictive Failure Analysis: 0
c3t50000393D851FDAAd0 Soft Errors: 0 Hard Errors: 0 Transport Errors: 0
Vendor: TOSHIBA  Product: MBF2300RC        Revision: 3706 Serial No:
EB25PC201AMS
Size: 300.00GB <300000000000 bytes>
Media Error: 0 Device Not Ready: 0 No Device: 0 Recoverable: 0
Illegal Request: 0 Predictive Failure Analysis: 0
c4t50000393D822D2B6d0 Soft Errors: 0 Hard Errors: 0 Transport Errors: 0
Vendor: TOSHIBA  Product: MBF2300RC        Revision: 3706 Serial No:
EB25PC2015P8
Size: 300.00GB <300000000000 bytes>
Media Error: 0 Device Not Ready: 0 No Device: 0 Recoverable: 0
Illegal Request: 0 Predictive Failure Analysis: 0
c2t50000393E8001BB6d0 Soft Errors: 0 Hard Errors: 0 Transport Errors: 0
Vendor: TOSHIBA  Product: MBF2300RC        Revision: 3706 Serial No:
EB25PC301AV6
Size: 300.00GB <300000000000 bytes>
Media Error: 0 Device Not Ready: 0 No Device: 0 Recoverable: 0
Illegal Request: 0 Predictive Failure Analysis: 0
#
```

C.2 prtdiag Command

The prtdiag command displays the system settings and diagnosis information. The diagnosis information shows FRUs in the system that experienced errors.
The prtdiag command is in the following directory: /usr/platform/platform-name/sbin/.
The prtdiag command may display a slot number different from what is supposed to be displayed according to other parts of this manual. This does not indicate a fault.
Table C-2 lists the options of the prtdiag command and how those options are useful for troubleshooting.

Table C-2 prtdiag command options

Option	Description	Application
No options	Displays a list of components.	Allows you to check the CPU information, the memory configuration, the mounted PCI Express (PCIe) cards, the OpenBoot PROM version, the mode switch status, and the CPU operational mode.
-v	Displays information in detailed (Verbose) mode.	In addition to the content displayed when no option is specified, this option allows you to check detailed information of the PCIe card.

The following example shows the output from the prtdiag command.

```
# prtdiag -v
System Configuration:  Oracle Corporation  sun4v SPARC M10-1
Memory size: 63744 Megabytes
================================ Virtual CPUs ================================
CPU ID Frequency Implementation         Status
------ --------- ---------------------- -------
0      3700 MHz  SPARC64-X+             on-line
1      3700 MHz  SPARC64-X+             on-line
2      3700 MHz  SPARC64-X+             on-line
3      3700 MHz  SPARC64-X+             on-line
4      3700 MHz  SPARC64-X+             on-line
5      3700 MHz  SPARC64-X+             on-line
6      3700 MHz  SPARC64-X+             on-line
7      3700 MHz  SPARC64-X+             on-line
8      3700 MHz  SPARC64-X+             on-line
9      3700 MHz  SPARC64-X+             on-line
10     3700 MHz  SPARC64-X+             on-line
11     3700 MHz  SPARC64-X+             on-line
12     3700 MHz  SPARC64-X+             on-line
13     3700 MHz  SPARC64-X+             on-line
14     3700 MHz  SPARC64-X+             on-line
15     3700 MHz  SPARC64-X+             on-line
======================== Physical Memory Configuration ========================
```

```
Segment Table:
----------------------------------------------------------------
Base                Segment  Interleave  Bank     Contains
Address             Size     Factor      Size     Modules
----------------------------------------------------------------
0x7e0000000000      64 GB    4           16 GB    /SYS/MBU/CMP0/MEM00A
                                                  /SYS/MBU/CMP0/MEM01A
                                        16 GB     /SYS/MBU/CMP0/MEM02A
                                                  /SYS/MBU/CMP0/MEM03A
                                        16 GB     /SYS/MBU/CMP0/MEM10A
                                                  /SYS/MBU/CMP0/MEM11A
                                        16 GB     /SYS/MBU/CMP0/MEM12A
                                                  /SYS/MBU/CMP0/MEM13A
======================================== IO Devices
========================================
Slot +             Bus   Name +                            Model      Max Speed
  Cur Speed
Status             Type  Path                                         /Width
  /Width
-------------------------------------------------------------------------------
--------------
/SYS/MBU/SASHBA    PCIE  scsi-pciex1000,87                 LSI,2308_2 5.0GT/x8
  5.0GT/x8
                         /pci@8000/pci@4/pci@0/pci@0/scsi@0
/SYS/MBU/NET0      PCIE  network-pciex8086,10c9                        2.5GT/x2
  2.5GT/x2
                         /pci@8000/pci@4/pci@0/pci@1/network@0
/SYS/MBU/NET1      PCIE  network-pciex8086,10c9                        2.5GT/x2
  2.5GT/x2
                         /pci@8000/pci@4/pci@0/pci@1/network@0,1
/SYS/MBU/NET2      PCIE  network-pciex8086,10c9                        2.5GT/x2
  2.5GT/x2
                         /pci@8100/pci@4/pci@0/pci@0/network@0
/SYS/MBU/NET3      PCIE  network-pciex8086,10c9                        2.5GT/x2
  2.5GT/x2
                         /pci@8100/pci@4/pci@0/pci@0/network@0,1
MB                 PCIX  usb-pciclass,0c0310                          --
  --
                         /pci@8000/pci@4/pci@0/pci@2/pci@0/usb@4
MB                 PCIX  usb-pciclass,0c0320                          --
  --
                         /pci@8000/pci@4/pci@0/pci@2/pci@0/usb@4,1
============================ Environmental Status ============================
============================ FRU Status ============================
Location                            Name      Status
-------------------------------------------------------
                                    SYS       enabled
============================ FW Version ============================
Version
----------------------------------------------------------------
2352
====================== System PROM revisions =======================
Version
----------------------------------------------------------------
OBP 4.38.5 2017/04/13 16:40
```

```
Chassis Serial Number
---------------------
TZ01348016
#
```

C.3 prtconf Command

The prtconf command displays the configured devices.
The prtconf command identifies hardware units recognized by Oracle Solaris.
When a software application experiences a hardware-related issue even though there is no hardware error, this command allows you to check whether Oracle Solaris recognizes the hardware and whether the hardware drivers are loaded.
Table C-3 lists the options of the prtconf command and how those options are useful for troubleshooting.

Table C-3 prtconf command options

Option	Description	Application
No options	Displays the device tree for the devices recognized by Oracle Solaris.	A hardware device is regarded as operating normally if it is recognized. If the message "(driver not attached)" is displayed for a device or a sub-device, the driver for the device is corrupted or does not exist.
-D	Outputs content similar to that of no options but differs in that the displayed content contains device driver names.	Allows you to check the driver necessary for Oracle Solaris to enable the device, or to view a list of drivers to be used.
-p	Outputs content similar to that of no options but differs in that the display is simpler.	Allows you to view the devices as a simple list.
-V	Displays the version and date of the OpenBoot PROM firmware.	Allows you to quickly check the firmware version.

The following example shows the output from the prtconf command.

```
# prtconf
System Configuration:  Oracle Corporation  sun4v
Memory size: 131304 Megabytes
System Peripherals (Software Nodes):

ORCL,SPARC64-X
    scsi_vhci, instance #0
    packages (driver not attached)
        SUNW,builtin-drivers (driver not attached)
```

```
        SUNW,probe-error-handler (driver not attached)
        deblocker (driver not attached)
        disk-label (driver not attached)
        terminal-emulator (driver not attached)
        dropins (driver not attached)
        SUNW,asr (driver not attached)
        kbd-translator (driver not attached)
        obp-tftp (driver not attached)
        zfs-file-system (driver not attached)
        hsfs-file-system (driver not attached)
    chosen (driver not attached)
    openprom (driver not attached)
        client-services (driver not attached)
    options, instance #0
    aliases (driver not attached)
    memory (driver not attached)
    virtual-memory (driver not attached)
    iscsi-hba (driver not attached)
        disk (driver not attached)
    virtual-devices, instance #0
        console, instance #0
        rtc (driver not attached)
        flashprom (driver not attached)
        console (driver not attached)
        channel-devices, instance #0
            virtual-channel, instance #0
            virtual-channel, instance #3
            virtual-console-concentrator, instance #0
            virtual-network-switch, instance #0
            virtual-disk-server, instance #0
            virtual-channel-client, instance #1
            virtual-channel-client, instance #2
            pciv-communication, instance #0
            virtual-domain-service, instance #0
    cpu (driver not attached)
    cpu (driver not attached)
    cpu (driver not attached)
    cpu (driver not attached)
    cpu (driver not attached)
------------------------Omitted------------------------
    cpu (driver not attached)
    cpu (driver not attached)
    cpu (driver not attached)
    pci, instance #0
        pci, instance #0
            pci, instance #1
                pci, instance #2
                    scsi, instance #0
                        iport, instance #8
                            smp, instance #3
                            disk, instance #8
                            enclosure, instance #3
                        iport, instance #11
                pci, instance #3
                    pci, instance #5
```

```
                        usb, instance #0
                        usb, instance #0
                            hub, instance #0
                pci, instance #4
                    network, instance #0
                    network, instance #1
                pci, instance #6
                    network, instance #2
                    network, instance #3
    pci, instance #1
        pci, instance #7
            pci, instance #8
                pci, instance #9
                pci, instance #10
                pci, instance #11
    pci, instance #2
        pci, instance #12
            pci, instance #13
                pci, instance #14
                pci, instance #15
                pci, instance #16
                pci, instance #17
    pci, instance #3
        pci, instance #18
            pci, instance #19
                pci, instance #20
                pci, instance #21
                pci, instance #22
                pci, instance #23
    pci, instance #4
        pci, instance #24
            pci, instance #25
                pci, instance #26
                    scsi, instance #1
                        iport, instance #6
                            smp, instance #1
                            disk, instance #6
                            enclosure, instance #1
                        iport, instance #9
                pci, instance #27
                    pci, instance #29
                        usb, instance #1
                        usb, instance #1
                            hub, instance #2
                pci, instance #28
                    network, instance #4
                    network, instance #5
                pci, instance #30
                    network, instance #6
                    network, instance #7
------------------------Omitted------------------------
    pci, instance #22
        pci, instance #101
            pci, instance #102
                pci, instance #103
```

```
                pci, instance #104
    pci, instance #19
        pci, instance #105
    pci, instance #23
        pci, instance #106
            pci, instance #107
                pci, instance #108
                pci, instance #109
    pci-performance-counters, instance #0
    pci-performance-counters, instance #1
    pci-performance-counters, instance #2
    pci-performance-counters, instance #3
    pci-performance-counters, instance #4
    pci-performance-counters, instance #5
    pci-performance-counters, instance #6
    pci-performance-counters, instance #7
    pci-performance-counters, instance #8
    pci-performance-counters, instance #9
    pci-performance-counters, instance #10
    pci-performance-counters, instance #11
    pci-performance-counters, instance #12
    pci-performance-counters, instance #13
    pci-performance-counters, instance #14
    pci-performance-counters, instance #15
    pci-performance-counters, instance #16
    pci-performance-counters, instance #20
    pci-performance-counters, instance #17
    pci-performance-counters, instance #21
    pci-performance-counters, instance #18
    pci-performance-counters, instance #22
    pci-performance-counters, instance #19
    pci-performance-counters, instance #23
    ramdisk-root (driver not attached)
    os-io (driver not attached)
    fcoe, instance #0
    iscsi, instance #0
    pseudo, instance #0
#
```

C.4 netstat Command

The netstat command displays the network status and the protocol statistics.
This command allows you to view a list of connections maintained by the host and their status. The command also allows you to check the IP, TCP, and UDP packet statistics and error conditions.
Table C-4 lists the options of the netstat command and how those options are useful for troubleshooting.

Table C-4 netstat command options

Option	Description	Application
-i	Displays the interface status. The displayed content includes information on incoming and outgoing packets, incoming and outgoing errors, collisions, and queues.	Allows you to view a concise overview of the network status.
-i interval	Executes the netstat command at the interval of the number of seconds specified with a numeric value after the -i option.	Identifies intermittent or long-term network events. You can view nighttime events at a glance by piping the netstat output to a file.
-p	Displays the media table.	Allows you to check the MAC addresses of the host on the subnetwork.
-r	Displays the routing table.	Allows you to check the routing information.
-n	Converts a host name into an IP address and then displays it.	Allows you to check the IP address instead of the host name.

The following example shows the output from the netstat command.

```
# netstat -p
Net to Media Table: IPv4
Device   IP Address               Mask      Flags      Phys Addr
------ -------------------- --------------- -------- ---------------
net0   4S-111-D0            255.255.255.255 SPLA     b0:99:28:98:30:36
net0   10.24.187.1          255.255.255.255          00:0a:b8:50:cd:42
net0   224.0.0.22           255.255.255.255 S        01:00:5e:00:00:16

Net to Media Table: IPv6
 If   Physical Address    Type      State       Destination/Mask
----- -----------------  ------- ------------ ---------------------------
net0  33:33:00:00:00:01  other   REACHABLE    ff02::1
net0  33:33:00:00:00:02  other   REACHABLE    ff02::2
net0  33:33:00:01:00:02  other   REACHABLE    ff02::1:2
net0  33:33:00:00:00:16  other   REACHABLE    ff02::16
net0  b0:99:28:98:30:36  local   REACHABLE    fe80::b299:28ff:fe98:3036
net0  33:33:ff:98:30:36  other   REACHABLE    ff02::1:ff98:3036

#
```

C.5 ping Command

The ping command sends the ICMP ECHO_REQUEST packet to network hosts.

In certain configurations of the ping command, the command output allows you to identify a network link or a node that has experienced a problem. The destination host is specified by the variable: *hostname*.
Table C-5 lists the operands/options of the ping command and how they are useful for troubleshooting.

Table C-5 ping command options

Operand/option	Description	Application
hostname	When you send a probe packet to *hostname*, a message is returned.	Allows you to confirm that a host is active on the network.
-g *hostname*	Forces the probe packet to go through the specified gateway.	Allows you to test the quality of individual routes by sending packets to the target host via the various specified routes.
-i *interface*	Specifies the interface to be used for sending and receiving a probe packet.	Allows you to easily check the secondary network interface.
-n	Converts a host name into an IP address and then displays it.	Allows you to check the IP address instead of the host name.
-s	ping is repeated at an interval of 1 second. Pressing the [Ctrl] + [C] keys stops ping, and then displays the statistics.	Allows you to check intermittent or long-term network events. You can view nighttime network events at a glance by piping the ping output to a file.
-svR	Displays the routes that probe packets have passed through at an interval of 1 second.	Displays the routes and hop counts of probe packets, allowing you to compare multiple routes to identify any bottleneck.

The following example shows the output from the ping command.

```
# ping -s 10.24.187.50
PING 10.24.187.50: 56 data bytes
64 bytes from 10.24.187.50: icmp_seq=0. time=0.555 ms
64 bytes from 10.24.187.50: icmp_seq=1. time=0.400 ms
64 bytes from 10.24.187.50: icmp_seq=2. time=0.447 ms
^C
----10.24.187.50 PING Statistics----
3 packets transmitted, 3 packets received, 0% packet loss
round-trip (ms)  min/avg/max/stddev = 0.400/0.467/0.555/0.079
#
```

C.6 ps Command

The ps command displays a list of process statuses. When no options are specified, the command outputs information on those processes that have the same execution user ID as the user executing the command and the same control terminal.
If you specify an option, output information is controlled by the option.
Table C-6 lists the options of the ps command and how those options are useful for troubleshooting.

Table C-6 ps command options

Option	Description	Application
-e	Displays information on various processes.	Allows you to view the process IDs and files that can be executed.
-f	Generates a complete list.	Allows you to view process information such as the user ID, the parent process ID, the execution time, and the paths to the executed files.
-o *option*	Selects any items from those that can be configured as outputs. The pid, pcpu, pmem, and comm options display the process ID, CPU usage, memory usage, and corresponding executable files, respectively.	Allows you to check only the most important information. By determining the resource usage rate, you can identify those processes that could potentially affect system performance or even cause a hang up.

The following example shows the output from the ps command.

```
# ps -eo pcpu,pid,comm|sort -rn
%CPU   PID COMMAND
 0.0   674 sort
 0.0   673 ps
 0.0   637 -bash
 0.0   636 login
 0.0   634 /usr/sbin/in.telnetd
 0.0   629 -bash
 0.0   613 /usr/bin/login
 0.0   602 /usr/lib/devchassis/devchassisd
 0.0   600 /opt/SUNWldm/bin/ldmd
 0.0   581 /usr/lib/inet/in.ndpd
 0.0   580 /sbin/dhcpagent
 0.0   577 /usr/lib/rmvolmgr
 0.0   548 /usr/sbin/auditd
 0.0   519 /usr/sbin/syslogd
 0.0   508 /usr/lib/ssh/sshd
 0.0   497 /usr/lib/fm/fmd/fmd
 0.0   487 /usr/lib/hal/hald-addon-cpufreq
 0.0   472 /usr/lib/autofs/automountd
```

```
  0.0   470 /usr/lib/autofs/automountd
  0.0   468 /usr/lib/inet/inetd
  0.0   458 hald-runner
  0.0   453 /usr/lib/hal/hald
  0.0   450 /usr/sbin/rpcbind
  0.0   421 /usr/lib/inet/proftpd
  0.0   413 /usr/sbin/cron
  0.0   382 /lib/svc/method/iscsid
  0.0   369 /usr/lib/efcode/sparcv9/efdaemon
  0.0   332 /usr/sbin/nscd
  0.0   297 /usr/lib/picl/picld
  0.0   272 /lib/inet/nwamd
  0.0   179 /usr/lib/devfsadm/devfsadmd
  0.0   176 /usr/lib/zones/zonestatd
  0.0   171 /usr/lib/ldoms/drd
  0.0   164 /usr/lib/ldoms/ldmad
  0.0   161 /usr/lib/utmpd
  0.0   158 /usr/lib/dbus-daemon
  0.0   128 /usr/lib/sysevent/syseventd
  0.0   112 /usr/lib/pfexecd
  0.0    98 /lib/inet/in.mpathd
  0.0    74 /lib/crypto/kcfd
  0.0    73 /lib/inet/ipmgmtd
  0.0    59 /usr/sbin/dlmgmtd
  0.0    38 /lib/inet/netcfgd
  0.0    13 /lib/svc/bin/svc.configd
  0.0    11 /lib/svc/bin/svc.startd
  0.0     8 vmtasks
  0.0     7 intrd
  0.0     6 kmem_task
  0.0     5 zpool-rpool
  0.0     3 fsflush
  0.0     2 pageout
  0.0     1 /usr/sbin/init
  0.0     0 sched
#
```

C.7 prstat Command

The prstat command repeatedly tests all the active processes on the system, and provides statistics based on the specified output mode and sorting order. The output from the prstat command is similar to that from the ps command.
Table C-7 lists the options of the prstat command and how those options are useful for troubleshooting.

Table C-7 prstat command options

Option	Description	Application
No options	Displays a list of processes sorted in descending order of CPU resource consumption. The list is restricted by the height of the terminal window and the number of processes. The output is automatically updated every 5 seconds, and is stopped by pressing the [Ctrl] + [C] keys.	Allows you to view process IDs, user IDs, memory usage, the status, CPU usage, and command names with the output.
-n *number*	Restricts the number of lines in the output.	Limits the amount of displayed data, so that you can identify those processes that are consuming excessive amounts of resources.
-s *key*	Sorts the list by key parameter.	The list can be sorted by cpu (default), time, and size.
-v	Displays the information in detailed mode.	Allows you to view other parameters.

The following example shows the output from the prstat command.

```
# prstat -n 5 -s size
   PID USERNAME  SIZE   RSS STATE   PRI NICE      TIME  CPU PROCESS/NLWP
   497 root       55M   49M sleep    59    0   0:01:12 0.0% fmd/37
   600 root       41M   36M sleep    59    0   0:09:13 0.0% ldmd/13
    11 root       37M   33M sleep    59    0   0:00:17 0.0% svc.startd/12
   468 root       24M   12M sleep    59    0   0:00:00 0.0% inetd/4
    13 root       20M   19M sleep    59    0   0:00:37 0.0% svc.configd/24
Total: 49 processes, 669 lwps, load averages: 0.05, 0.05, 0.04
#
```

Appendix D

External Interface Specifications

This appendix provides the specifications of the external interface connectors on the server.

- Serial Port
- USB Port
- SAS Port
- RESET Switch

D.1 Serial Port

Table D-1 lists the specifications of the serial port.

Table D-1 Serial port

Pin arrangement	Pin number	Signal name	Input/output	Description
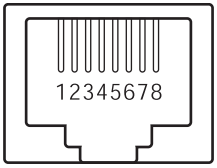	1	RTS	Output	Transmission request
	2	DTR	Output	Data terminal ready
	3	TXD	Output	Transmitted data
	4	GND	---	Ground
	5	GND	---	Ground
	6	RXD	Input	Received data
	7	DSR	Input	Data set ready
	8	CTS	Input	Transmission possible

D.1.1 Wire connection chart for serial cables

Figure D-1 Wire connection chart for serial cables

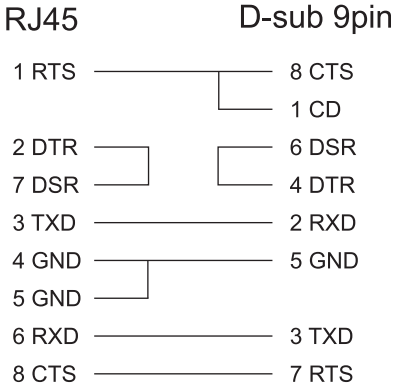

D.2 USB Port

Table D-2 lists the specifications of the USB port.

Table D-2 USB port

Pin arrangement	Pin number	Signal name	Input/output	Description
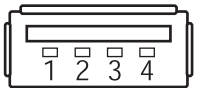	1	VBUS	Output	Power supply
	2	-DATA	Input/ output	Data
	3	+DATA	Input/ output	Data
	4	GND	---	Ground

D.3 SAS Port

The SAS port is used to connect external devices with an SAS interface, such as a tape drive. The chassis has one SAS port on the rear.
Consult a service engineer about compatible equipment.

D.4 RESET Switch

The RESET switch is an emergency switch to restart the XSCF. For how to use the RESET switch, see "18.2 Precautions Concerning Using the RESET Switch" in the *Fujitsu SPARC M12 and Fujitsu M10/SPARC M10 System Operation and Administration Guide*.

Figure D-2 shows the location of the RESET switch. The RESET switch (A in Figure D-2) is mounted on the rear of the chassis.

Figure D-2 Location of the RESET switch