FUJITSU

Fujitsu Memory Products

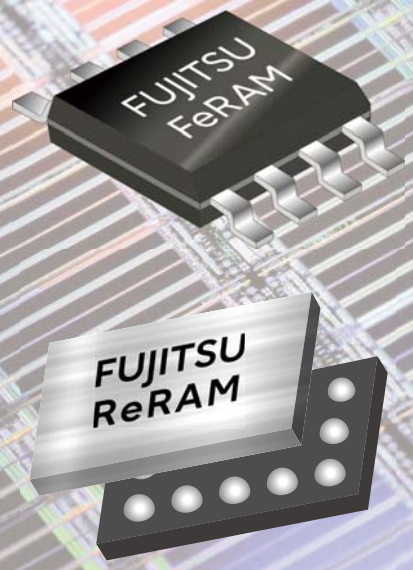

FeRAM/ReRAM

2023

Our Memory Products keep supporting Industry and Daily Life

Most people might not have the opportunity to come into direct contact with semiconductors in their daily lives. In addition, many people might feel that applications being used the electronic devices are far from our daily lives. As you can see, semiconductors are not so familiar to us, but they are used in the products we use every day.
Memory ICs we are developing are also semiconductors. FUJITSU group has been offering memory products for over 50 years since 1969. Today, we offer FeRAM (Ferroelectric Random Access Memory) and ReRAM (Resistive Random Access Memory) products of non-volatile memory devices that can retain data without a power supply or backup battery and its memory solution.
We will continue to develop memory products that keep supporting industry and daily life.

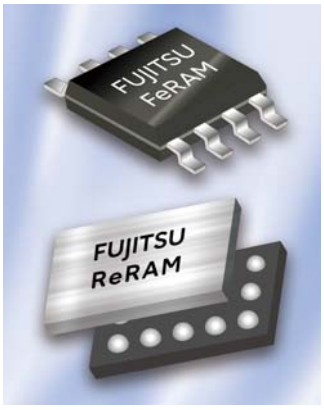

High-Performance and High-Reliability Memory

We currently offer product families for FeRAM and ReRAM. Both are non-volatile memories, but each has different features and is suitable for different applications.

The greatest strength of FeRAM is the high number of data read/write cycles that can be guaranteed. Since it can be rewritten data up to 100 trillion times, our FeRAM is suitable for usages that rewrite data frequently. For example, the FeRAM memory has been adopted as a memory for recording information in meters, measuring instruments, industrial robots, and automobiles.

On the other hand, ReRAM's strengths are an unlimited number of data reading times and an extremely small read current. It is suitable for usages that first record basic information and programs required for operation and frequently read that data during. In addition, it is expected extension of battery life in battery-operated small devices by using ReRAM for memory. For example, it is ideal for small wearable devices such as hearing aids and smartwatches.

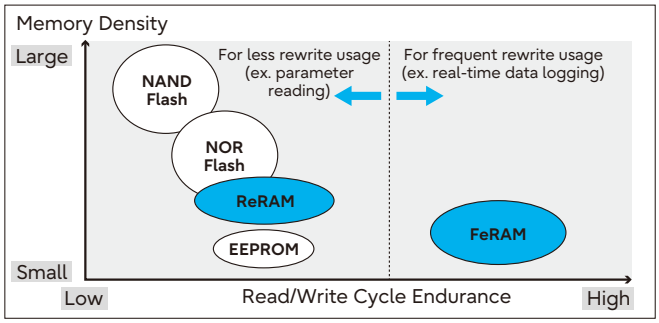

Position of Non-volatile Memory

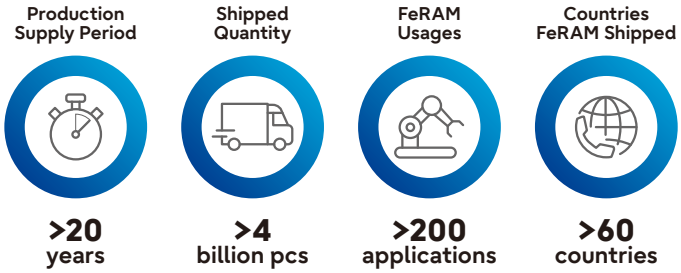

FeRAM Shipment History

For the global environment, what we can do

By developing memory products that consume less power, we are cooperating in reducing CO_2 emissions, one of the greenhouse gases.
In this way, we are contributing to the achievement of three of the 17 Sustainable Development Goals (SDGs) adopted by the United Nations by providing environmentally friendly semiconductor devices and solutions.

Goal	Our activities	Efficiency	Our products
Goals4: Quality education	Providing products to universities and public facility by free	Cooperate with science technology learning	Non-volatile memory "FeRAM", "RFID"
Goals7: Affordable and clean energy	Providing low power devices	Reduction of CO_2 emission	Non-volatile memory "FeRAM", "RFID"
Goals12: Responsible consumption, production	Providing Batteryless solutions	Reduction of battery wastes	Batteryless solutions

For society, what we can do

By providing compact, high-performance memory products, we are enabling the miniaturization and high performance of social infrastructure facilities and devices. In addition, we are helping to enrich the lives of individuals by being used in the products such as IC cards and wearable devices for general consumers.

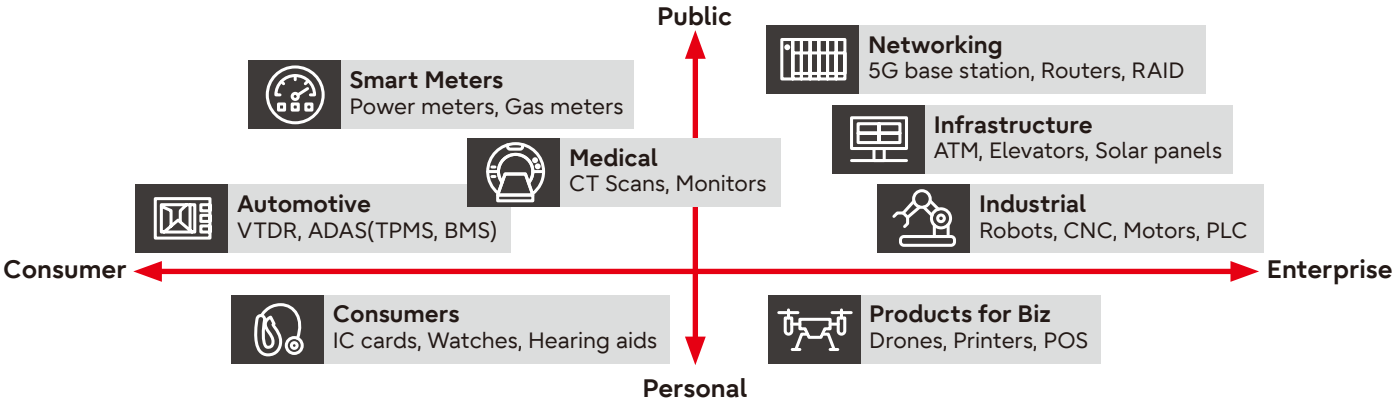

For a healthy life, what we can do

Our memory products help people around the world live healthier lives.
Hearing aids are used for people who are hard of hearing. Also, for people who have trouble sleeping, continuous positive airway pressure (C PAP) devices are working to help them sleep. Our memory products are also used in those products and devices that support such healthy living.

FeRAM

FeRAM Overview

The memory density of FeRAM products ranges from 4Kbit to 8Mbit. The interface has a serial interface (SPI, I2C) and a parallel interface.

- Density 16Kbit to 8Mbit (SPI interface) / 4Kbit to 1Mbit (I^2C interface) / 256Kbit to 8Mbit (parallel interface)
- Operating voltage 1.7 to 1.95V / 1.8 to 3.6V / 2.7 to 3.6V / 2.7 to 5.5V / 3.0 to 5.5V
- Operating temperature range -55 to +85°C / -40 to +85°C / -40 to +105°C / -40 to +125°C
- Read/Write endurance 1 trillion / 10 trillion / 100 trillion

*: Please refer to datasheet of each product in details.

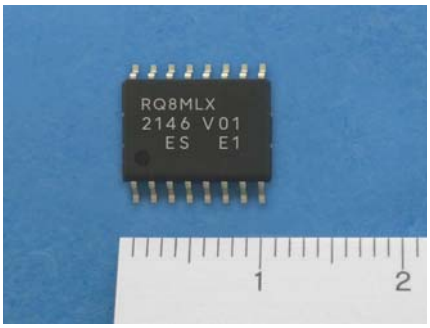

8Mbit Quad SPI FeRAM

FeRAM Features

FeRAM has four superior features non-volatility, high read/write endurance, fast writing speed, and low power consumption.

4 Great Features

Non-volatility
- Stored data are not disappeared at power off
- No battery is needed for data retention

Fast Writing Speed
- Enable to overwrite data without erasing operation
- No waiting time for erasing/writing operation

High Read/Write Cycle Endurance
- Guarantees 100 trillion(10^{14}) read/write cycles
- 100 million times EEPROM's endurance

Low Power Consumption
- No booster circuit for a write operation
- Lower power consumption at writing by short writing time
- No data retention current to keep the data

Comparison between FeRAM and other memories

Item	FeRAM	EEPROM	FLASH	SRAM
Memory Type	Non-volatile	Non-volatile	Non-volatile	Volatile
Write Method	Overwrite	Erase + Write	Erase + Write	Overwrite
Write Cycle Time	120ns	5ms	10μs	55ns
Read/Write Cycles	100 trillion	1 million	0.1 million	Unlimited
Booster Circuit	No	Yes	Yes	No
Data Backup Battery	No	No	No	Yes

FeRAM

FeRAM Product Family

Our FeRAM products are categorized into two product families. One is "FeRAM (Device)" in the form of SOP and TSOP packages for general use, and another is "FeRAM-embedded LSI" which is an application-specified LSI such as RFID LSI and authentication LSI.

One type of RFID LSI provides not only high-speed wireless communications, but also features wireless power transfer, making it possible to construct a Battery-less wireless solution that consists of a FeRAM-embedded LSI and Reader/Writer device.

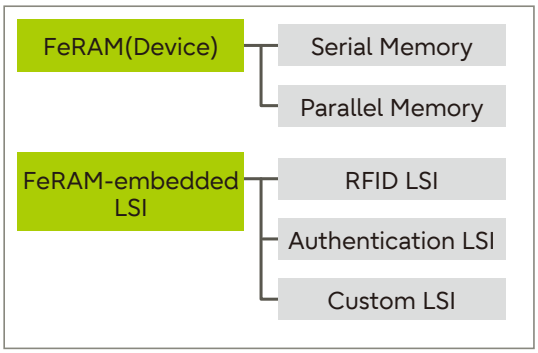

FeRAM Product Family

FeRAM Structure

FeRAM is a memory using ferroelectric elements. Its cell structure and method to store data are different from other conventional nonvolatile memory devices such as EEPROM and Flash memory. Of course, the judgment method of stored data "1" and "0" is also different.
EEPROM judges "1" or "0" data by the state of the memory cell being charged or discharged. While FeRAM is judged by the state of electric polarization caused by the movement of atoms in the molecule. Regarding FeRAM structure, we use PZT(lead zirconate titanate) as a ferroelectric element. The crystalline structure of PZT is shown below.
The zirconium or titanium positive ion occupies two stable positions in the lattice and can be moved between the positions by applying an external electric field. Either up or down polarization can be stored even if the electric field is removed. This means the state of "polarization" is memorized. Ferroelectric memory utilizes the characteristics of this non-volatility.

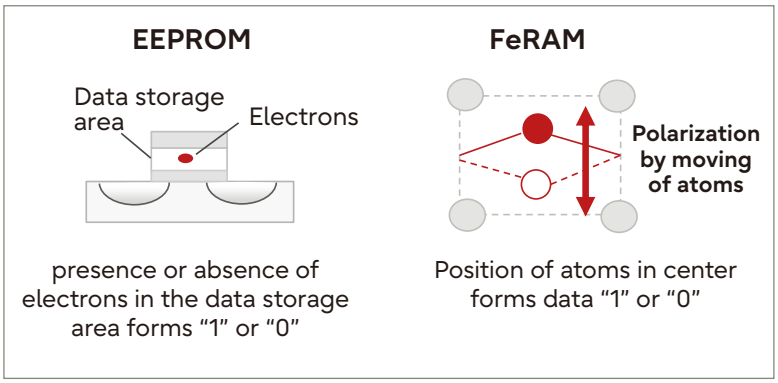

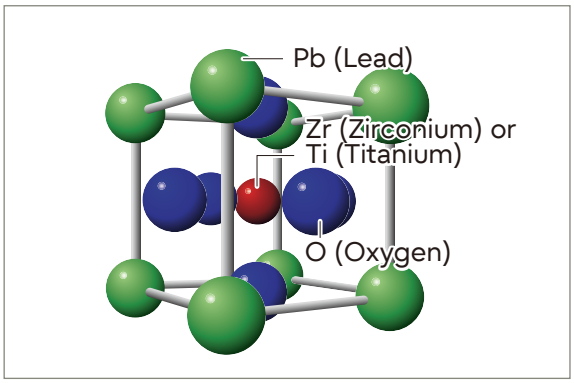

FeRAM

Serial Memory Lineup

SPI Interface (for High Reliability Use, AEC-Q100 Compliant) *1, *2

Part number	Memory density (bit)	Power supply voltage (V)	Operating frequency (Hz)	Operating temperature (˚C)	Read/Write cycles	Data retention*3	Package
MB85RS4MTY	4M	1.8 to 3.6	50M	-40 to +125	10 trillion	10years(+85˚C)	DFN-8(SOP-8*4)
MB85RS4MLY	4M	1.7 to 1.95	50M	-40 to +125	10 trillion	10years(+85˚C)	DFN-8(SOP-8*4)
MB85RS2MTY	2M	1.8 to 3.6	50M	-40 to +125	10 trillion	10years(+85˚C)	DFN-8/SOP-8
MB85RS2MLY	2M	1.7 to 1.95	50M	-40 to +125	10 trillion	10years(+85˚C)	DFN-8/SOP-8
1Mbit FeRAM (Under development)	1M	1.8 to 3.6/ 1.7 to 1.95	50M	-40 to +125	10 trillion	10years(+85˚C)	DFN-8/SOP-8
MB85RS512TY	512K	1.8 to 3.6	50M	-40 to +125	10 trillion	10years(+85˚C)	DFN-8/SOP-8
MB85RS512LY	512K	1.7 to 1.95	50M	-40 to +125	10 trillion	10years(+85˚C)	DFN-8/SOP-8
MB85RS256TY	256K	1.8 to 3.6	40M	-40 to +125	10 trillion	10years(+85˚C)	SOP-8
MB85RS256TYA	256K	1.8 to 3.6	50M	-40 to +125	10 trillion	10years(+85˚C)	DFN-8/SOP-8
MB85RS256LYA	256K	1.7 to 1.95	50M	-40 to +125	10 trillion	10years(+85˚C)	DFN-8/SOP-8
MB85RS128TY	128K	1.8 to 3.6	40M	-40 to +125	10 trillion	10years(+85˚C)	SOP-8
MB85RS64VY	64K	2.7 to 5.5	33M	-40 to +125	10 trillion	10years(+85˚C)	SOP-8

SPI Interface (for General Use) *1

Part number	Memory density (bit)	Power supply voltage (V)	Operating frequency (Hz)	Operating temperature (˚C)	Read/Write cycles	Data retention	Package
MB85RQ8MX	8M	2.7 to 3.6	108M	-40 to +105	10 trillion	10years(+85˚C)	SOP-16
MB85RQ8MLX	8M	1.7 to 1.95	108M	-40 to +105	10 trillion	10years(+85˚C)	SOP-16
MB85RS4MT	4M	1.8 to 3.6	40M	-40 to +85	10 trillion	10years(+85˚C)	SOP-8
MB85RQ4ML	4M	1.7 to 1.95	108M	-40 to +85	10 trillion	10years(+85˚C)	SOP-16
MB85RS2MTA	2M	1.7 to 3.6	40M	-40 to +85	10 trillion	10years(+85˚C)	SOP-8
MB85RS1MT	1M	1.8 to 3.6	30M	-40 to +85	10 trillion	10years(+85˚C)	SOP-8/DFN-8
MB85RS1MT (1.7V-operating)	1M	1.7 to 3.6	30M	-40 to +85	10 trillion	10years(+85˚C)	WL-CSP-8
MB85RS512T	512K	1.8 to 3.6	30M	-40 to +85	10 trillion	10years(+85˚C)	SOP-8
MB85RS256B	256K	2.7 to 3.6	33M	-40 to +85	1 trillion	10years(+85˚C)	SOP-8
MB85RS128B	128K	2.7 to 3.6	33M	-40 to +85	1 trillion	10years(+85˚C)	SOP-8
MB85RS64V	64K	3.0 to 5.5	20M	-40 to +85	1 trillion	10years(+85˚C)	SOP-8
MB85RS64	64K	2.7 to 3.6	20M	-40 to +85	1 trillion	10years(+85˚C)	SOP-8
MB85RS64T	64K	1.8 to 3.6	10M	-40 to +85	10 trillion	10years(+85˚C)	SOP-8/SON-8
MB85RS64T (1.7V-operating)	64K	1.7 to 3.6	10M	-40 to +85	10 trillion	10years(+85˚C)	SOP-8
MB85RS64TU	64K	1.8 to 3.6	10M	-55 to +85	10 trillion	10years(+85˚C)	SOP-8/SON-8
MB85RS16N	16K	2.7 to 3.6	20M	-40 to +95	1 trillion	10years(+95˚C)	SOP-8/SON-8
MB85RDP16LX	16K	1.65 to 1.95	15M	-40 to +105	10兆回	10years(+105˚C)	SON-8

*1: Please refer to the datasheet of each product for details.
*2: All products have the general use grade in addition to AEC-Q100 compliant products.
*3: Please refer to the datasheet for data retention time at 125°C.
*4: SOP-8 package is available in 125°C-operating FeRAM products for general use.

FeRAM

Serial Memory Lineup

I²C Interface (for High Reliability Use, AEC-Q100 Compliant) *1, *2

Part number	Memory density (bit)	Power supply voltage (V)	Operating frequency (Hz)	Operating temperature (°C)	Read/Write cycles	Data retention*3	Package
1Mbit FeRAM (Under development)	1M	1.8 to 3.6/ 1.7 to 1.95	3.4M	-40 to +125	10 trillion	10years(+85°C)	DFN-8/SOP-8
MB85RC512TY	512K	1.8 to 3.6	3.4M	-40 to +125	10 trillion	10years(+85°C)	DFN-8/SOP-8
MB85RC512LY	512K	1.7 to 1.95	3.4M	-40 to +125	10 trillion	10years(+85°C)	DFN-8/SOP-8
MB85RC256TY	256K	1.8 to 3.6	3.4M	-40 to +125	10 trillion	10years(+85°C)	DFN-8/SOP-8
MB85RC256LY	256K	1.7 to 1.95	3.4M	-40 to +125	10 trillion	10years(+85°C)	DFN-8/SOP-8

I²C Interface (for General Use) *1

Part number	Memory density (bit)	Power supply voltage (V)	Operating frequency (Hz)	Operating temperature (°C)	Read/Write cycles	Data retention	Package
MB85RC1MT	1M	1.8 to 3.6	3.4M	-40 to +85	10 trillion	10years(+85°C)	SOP-8
MB85RC512T	512K	1.7 to 3.6	3.4M	-40 to +85	10 trillion	10years(+85°C)	SOP-8
MB85RC256V	256K	2.7 to 5.5	1M	-40 to +85	1 trillion	10years(+85°C)	SOP-8
MB85RC128A	128K	2.7 to 3.6	1M	-40 to +85	1 trillion	10years(+85°C)	SOP-8
MB85RC64TA	64K	1.8 to 3.6	3.4M	-40 to +105	10 trillion	10years(+85°C)	SOP-8/SON-8
MB85RC64V	64K	3.0 to 5.5	1M	-40 to +85	1 trillion	10years(+85°C)	SOP-8
MB85RC16	16K	2.7 to 3.6	1M	-40 to +85	1 trillion	10years(+85°C)	SOP-8/SON-8
MB85RC16V	16K	3.0 to 5.5	1M	-40 to +85	1 trillion	10years(+85°C)	SOP-8
MB85RC04V	4K	3.0 to 5.5	1M	-40 to +85	1 trillion	10years(+85°C)	SOP-8

*1: Please refer to the datasheet of each product for details.
*2: All products have the general use grade in addition to AEC-Q100 compliant products.
*3: Please refer to the datasheet for data retention time at 125°C.

Parallel Memory Lineup

Parallel Interface *1

Part number	Density (configuration) (bit)	Power supply voltage (V)	Cycle time (ns)	Operating temperature (°C)	Read/Write cycles	Data retention	Package
MB85R8M1TA	8M (1M×8)	1.8 to 3.6	120	-40 to +85	100 trillion	10years(+85°C)	TSOP-44/ FBGA-48
MB85R8M2TA	8M (512K×16)	1.8 to 3.6	120	-40 to +85	100 trillion	10years(+85°C)	TSOP-44/ FBGA-48
MB85R4M2T	4M (256K×16)	1.8 to 3.6	150	-40 to +85	10 trillion	10years(+85°C)	TSOP-44
MB85R256F	256K (32K×8)	2.7 to 3.6	150	-40 to +85	1 trillion	10years(+85°C)	TSOP-28/ SOP-28

*1: Please refer to the datasheet of each product for details.

ReRAM

ReRAM Overview

The memory density lineup of ReRAM products is 8Mbit and 12Mbit. Their interface is SPI interface.

- Density: 8Mbit, 12Mbit (SPI interface)
- Operating voltage: 1.6 to 3.6V
- Operating temperature range: -40 to +85°C
- Read endurance: Unlimited
- Write endurance: 1 million (8Mbit), 0.5 million (12Mbit)
- Package: 11pin WL-CSP

*: Please refer to datasheet of each product in details.

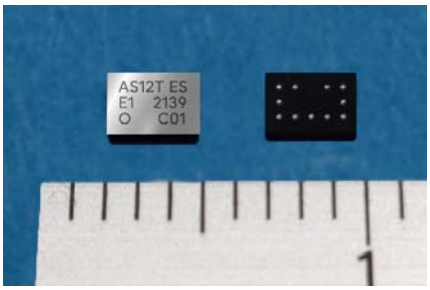

12Mbit ReRAM

ReRAM Features, Structure

ReRAM which stands for Resistive Random Access Memory has four superior features non-volatility, very small read current, large density, and very small package. Especially, it has an extremely smaller read current level than other non-volatile memory products as the average read current is as small as 0.15mA at an operating frequency of 5MHz. It enables to extend of battery life in battery-operated end-products. Our ReRAM product in a very small package of 2mm x 3mm is ideal for use in wearable devices.
ReRAM is a non-volatile memory storing data by changing resistance in cell material. It records "1" or "0" of data by massive changes in resistance created by applying a pulse voltage to a metal oxide thin film.

4 Great Features

Non-volatility
- Stored data are not disappeared at power off
- No battery is needed for data retention

Large Density
- Large density of 12Mbit as non-volatile random access memory

Very Small Read Current
- Average read current is 0.15mA at 5MHz operation
- Maximum read current is 0.7mA at 10MHz operation

Very Small Package
- 11pin WL-CSP in approximately 2mm x 3mm

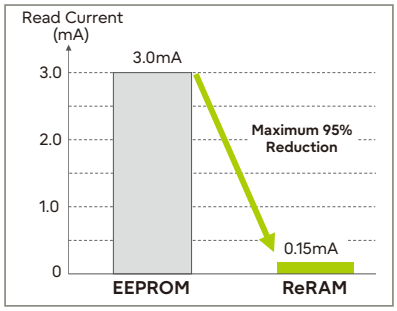

Read Current Comparison

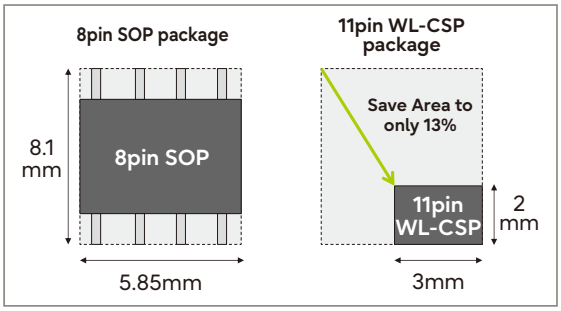

Mounting Area Comparison

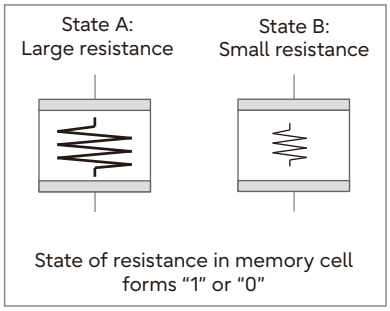

Cell Structure of ReRAM

ReRAM Lineup

Part number	Memory density(bit)	Power supply voltage(V)	Operating frequency(Hz)	Operating temperature(℃)	Read current	Read cycles	Write cycles	Package
MB85AS12MT	12M	1.6 to 3.6	10M	-40 to +85	Max 0.7 mA	Unlimited	0.5 million	WL-CSP-11
MB85AS8MT	8M	1.6 to 3.6	10M	-40 to +85	Max 0.7 mA	Unlimited	1 million	WL-CSP-11

Customer's Issues and Solutions

Customer's Issues and Solutions

FeRAM and ReRAM of non-volatility memory products have superior features compared with conventional memories such as flash memory, EEPROM, and SRAM.
Our memory products can solve the following issues arising from the use of conventional memory products.

Solutions by FeRAM(1): Issues arising other memories

1. Use of flash memory

Issue: Large software development burden due to lower write endurance

Solution: Eliminating the need for developing software for wear leveling development

2. Use of EEPROM

Issue: Long data-writing time

Solution: Reducing data-writing time

3. Use of low-power SRAM

Issue: Use and extra cost of data-backup battery

Solution: No use of the battery

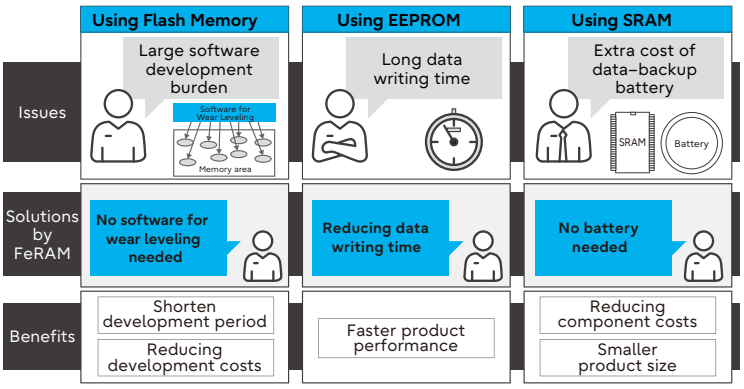

Solutions by FeRAM(2): Issues replacing SRAM

1. Issue : Additional work to change interface design and PCB design

Solution : Use of FeRAM compatible with SRAM interface and SRAM package

2. Issue : Difficult to replace with non-volatile memory of very slow writing speed

Solution : Use of FeRAM featuring fast writing operation as a maximum 25ns in page mode

3. Issue : Design restriction due to writing endurance up to 10 trillion times

Solution : Use of FeRAM with writing endurance up to 100 trillion times

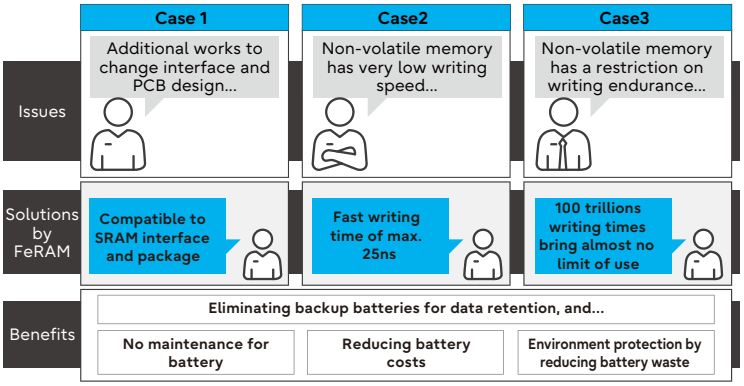

Solutions by ReRAM: Issues arising ReRAM and SRAM

1. Issue : Insufficient memory density of 8Mbit ReRAM

Solution : Use of 12Mbit ReRAM with the same pin assignment as 8Mbit product

2. Issue : Need to keep a package size small due to restriction of mounting area

Solution : Use of 12Mbit ReRAM in a very small package

3. Issue : Difficult to reduce power consumption by conventional non-volatile memory

Solution : Use of ReRAM featuring very small read current

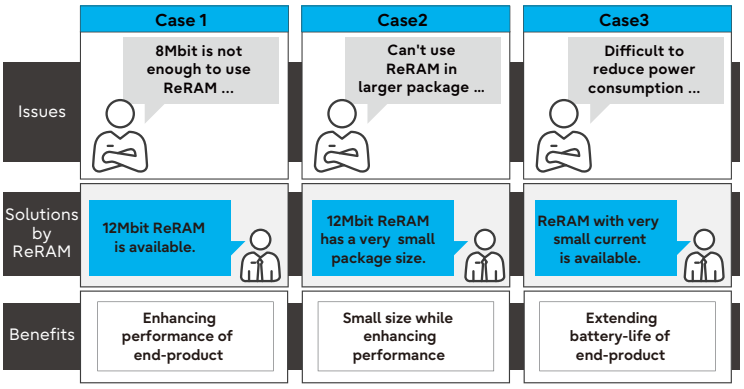

RFID LSI / Battery-less Solutions

RFID LSI

The advantages of FeRAM-embedded RFID LSI are the large memory density and fast data writing speed. If our RFID LSI is used in a tag to record the process history of products in a factory, the throughput time can be shortened. In addition, some RFID LSI products have dual interfaces of wireless and SPI. The products can operate fast processing by SPI interface and can read out important data using a wireless interface during power outages.

RFID LSI Lineup

Part number	Operating frequency	User memory density	Commands	Interface	Read/Write cycles
MB97R8110	UHF band 860 to 960MHz	8Kbyte	ISO/IEC18000-63 EPC C1G2 Ver1.2.0	SPI (Master/Slave)	10 trillion
MB97R8050		36byte (EPC 128bit)		-	10 billion
MB89R112	HF band 13.56MHz	8Kbyte	ISO/IEC15693	-	1 trillion
MB89R118C		2Kbyte	ISO/IEC15693	-	1 trillion
MB89R119B		256byte	ISO/IEC15693	-	1 trillion

Battery-less Solutions

Our "Battery-less solutions" means a proposal of building new systems that removes power wiring and batteries from the terminal devices, which normally require a wired power supply or batteries. This solution can be built by wirelessly supplying power to the terminal devices, and it requires that electronic components on the terminal devices operate with a very small power supply.
Our FeRAM-embedded LSI "MB97R8110" operates with very low power and the LSI enables to build of the system with battery-less terminal devices.

System Diagram

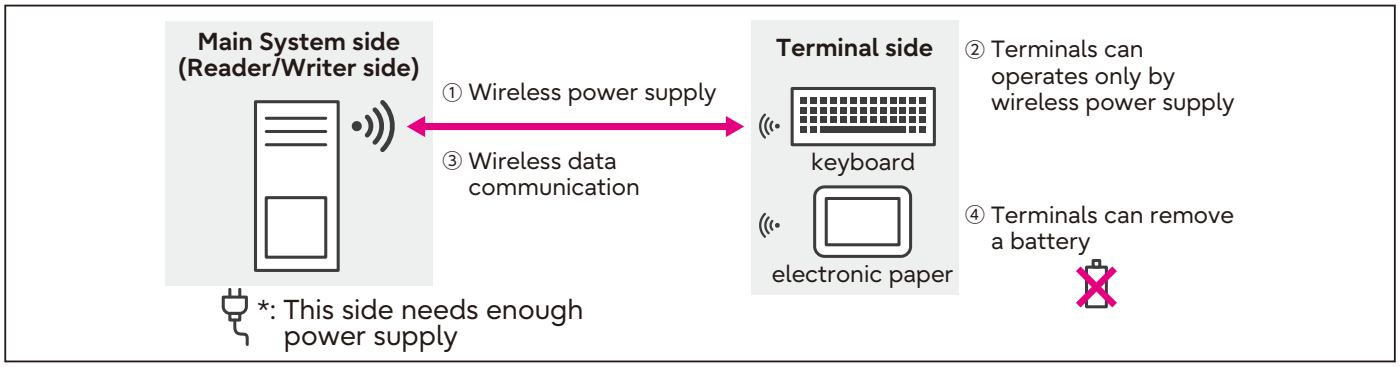

Applications

MB97R8110 helps to design terminal devices by removing a built-in battery. Customers can build systems with terminal devices such as electric papers, label tags, keyboards, and handy controllers that have no built-in battery (=battery-less).


Electronic Papers


Labels for Logistics


POS System


Keyboards


Remote Controllers

Global Contacts

Authorized Distributors

Americas

	Company Name	Address	Contact	Support Area
KAGA FEI	KAGA FEI AMERICA, Inc.	Headquarter: 2349 Bering Drive, San Jose, CA 95131, USA	Tel: +1 (800) 866-8608 E-mal: info@us.kagafei.com	North America, South America

Europe, Middle East, Africa, Central Asia

	Company Name	Address	Contact	Support Area
KAGA FEI	KAGA FEI EUROPE GmbH	Headquarter: Robert Bosch Str. 11, 63225 Langen, Germany	Tel: +49-6103-690-222 E-mail: info@eu.kagafei.com	Europe, Middle East, Africa, Central Asia
memorysolution	Memorysolution GmbH	Headquarter: Hafenstr. 17 D-79206 Breisach, Breisach am Rhein, Germany	Tel: +49 7667 / 9469-0 E-mail: industrial@memorysolution.de	Europe, Middle East, Africa, Central Asia

Asia

	Company Name	Address	Contact	Support Area
GARDEN 嘉德智能	GARDEN INTELLIGENT TECHNOLOGY CO., LTD.	#901, Building 13, Keenstar Building, Lingzhiyuan Community, Xin'an Street, Bao'an District, Shenzhen, CHINA	Tel: +86-755-27835821 E-mail: contact@garden-ehk.com	China
GEMSTONE	Gemstone Co., Ltd.	Headquarter: #2501, Building A, Dachong Business Center, Nanshan District, Shenzhen, Guangdong, China 518053	Tel: +86-755-8860-1162 E-mail: sales@g-ston.com	China
	Gemstone Co., Ltd.	Hong Kong office: Flat/Rm 1810 18F. Ceo tower 77 Wing Hong Street Cheung Sha Wan HK	Tel: +86-755-8860-1162 E-mail: sales@g-ston.com	Hong Kong, Taiwan
GEMSTONE KOREA	Gemstone Korea Co., Ltd.	Headquarter: #202, 327, Teheran-ro , Gangnam-gu, Seoul, Republic of Korea	Tel: +82-2-557-0010 E-mail: sales@g-ston.com	Korea
KAGA FEI	KAGA FEI ELECTRONICS (Shanghai), Co., Ltd.	Headquarter: Rm.03-05, 6F, Pingan Riverfront Financial Center, 757 Meng Zi Road, Huangpu District, Shanghai, China	Tel: +86-21-6146-3688 E-mail: sales@cn.kagafei.com	China
	KAGA FEI Electronics Pacific Asia Limited	Headquarter: Unit 403 on 4th Floor of Magnet Place, Tower 1,77-81, Container Port Road, Kwai Chung, New Territories, Hong Kong	Tel: (852-) 2736-3232 E-mail: sales@cn.kagafei.com	Hong Kong, Taiwan, ASEAN, Oceania
	KAGA FEI Korea Ltd.	Headquarter: #902, 416, Yeongdong-daero, Gangnam-gu, Seoul, Korea	Tel: +82-2-3484-7100 E-mail: kfk-info@kr.kagafei.com	Korea
金鼎泰 KINGDOM-TECH	KINGDOM-TECH ELECTRONIC LIMITED	Headquarter: 6th Floor, Block B, Rongxinxing Creative Building, No.19 Liuxian 2nd Road, Xin'an Street, Bao'an District, Shenzhen, China	Tel: +86-755-23997000 E-mail: sales@kingdom-tech.net	China
	KINGDOM-TECH ELECTRONIC LIMITED	Hong Kong Office: Flat/Rm 826 8/F Ocean Centre Harbour City 5 Canton Road TST KL HONG KONG	Tel: +86-137-24302997 E-mail: info@kdtic.com	Hong Kong, Taiwan, Australia
LEADSE	SHANGHAI LEADSE TECHNOLOGY CO., LTD.	ROOM 216, BUILDING 1, SCIENCE PARK, ZHIHUIWAN, NO 6 WENCHUAN RD, BAOSHAN DISTRICT, SHANGHAI, CHINA	Tel: +86-133-57198295 E-mail: sales@leadse.cn	China
MICHIP	Shenzhen Michip Electronic Technologies Co., Ltd.	Room401, BuildingB, Julongshan Emerging Industrial Park, Jinxiu Middle Road, Pingshan District, Shenzhen, P.R. China	Tel: +86-0755-82737600 E-mail: xun.c@michip.cn	China
米瑞斯 MIRIS	SHENZHEN MIRIS ELECTRONICS CO., LTD.	Rm 402, Bldg 11, Yungu Phase II, No. 1 Pingshan 1st Rd, Liuxian Blvd, Xili, Nanshan District, Shenzhen, Guangdong, China	Tel: +86-755-86523296 E-mail: sales_sz@mirischina.com	China
RADAR ELECTRONICS PROFESSIONAL ELECTRONICS COMPONENT AGENT	Suzhou Radar Electronics Co., Ltd.	Headquarter: ROOM215, Building3.SHIMAO PLAZA SOUTH AREA, GUSU DISTRICT, SUZHOU, JIANGSU, P.R.CHINA	Tel: +86 512 68131705 E-mail: sales@radar-electronics.cn	China

FUJITSU

FUJITSU SEMICONDUCTOR MEMORY SOLUTION LIMITED

Shin-Yokohama TECH Building, 3-9-1 Shin-Yokohama,
Kohoku-Ku, Yokohama, Kanagawa, 222-0033, Japan
https://www.fujitsu.com/jp/fsm/en/

AD05-00033-14E August 2023
Edition : Sales and Marketing Division