Appendix B Onboard GbE (Broadcom Ethernet) Network Configuration Under Windows Server 2008 Environment

B.1 Outline (PRIMEQUEST 580A/540A/580/540)

The Teaming function (multi-path function) using Broadcom Ethernet supports the following on the 580A/540A/580/540:

The Teaming function also uses the BASP (Broadcom Advanced Server Program) function within the BACS3 (Broadcom Advanced Control Suite 3) utility.

(1) Smart Load Balance and Fail Over (+LiveLink)

This function disperses load among the load balance members. At the occurrence of member problems (all members), traffic is transferred to a standby member.

Upon the recovery of one or more load balance members, traffic is switched from the standby member to a load balance member. The LiveLink function is only available in this mode.

Remarks: The Livelink function monitors for link loss between all load balance members and the specified target and transfers traffic to normally operating load balance members.

(2) Generic Trunking (FEC/GEC)/802.3ad-Draft Static

This is a load balance function that uses PagP (Port Aggregation Protocol). A switch to be interfaced must have this function or an equivalent one. This function also actualizes fail-over among load balance members.

(3) SLB (Auto-Fallback Disable) (+LiveLink)

This function is basically the same as (1) "Smart Load Balance and Fail Over" but does not switch traffic from a standby member to a load balance member automatically.

Remarks: The Link Aggregation (802.3ad) function is not supported.

Notes:

- The message "Broadcom 5704s chip is not supported" is output, but operation can continue without being affected.
- STP should be disabled when configuring SLB without using the LiveLink function.
  Doing so enables the down time to be kept to a minimum when determining the spanning tree loop at the onset of a fail over.
- BASP (Broadcom Advanced Server Program: Teaming Software) does not support Microsoft Network Load Balancing (NLB).
- BASP (Broadcom Advanced Server Program: Teaming Software) operations require that the user be logged in with Administrator privileges.
- A team configuration name should be a character string from 1 to 39 characters in length.
- A team name must not begin with a space or contain any of the following characters:
  & \ / : * ? < > | "
- A team name must be unique.
- When using the Generic Trunking function, you cannot specify a standby member.
- The virtual adapter cannot be made redundant.
- To switch traffic back to a load balance member from a standby member using SLB (Auto-Fallback Disable), right-click the created virtual adapter in [Broadcom Advanced Control Suite 3] and then click [Fallback].

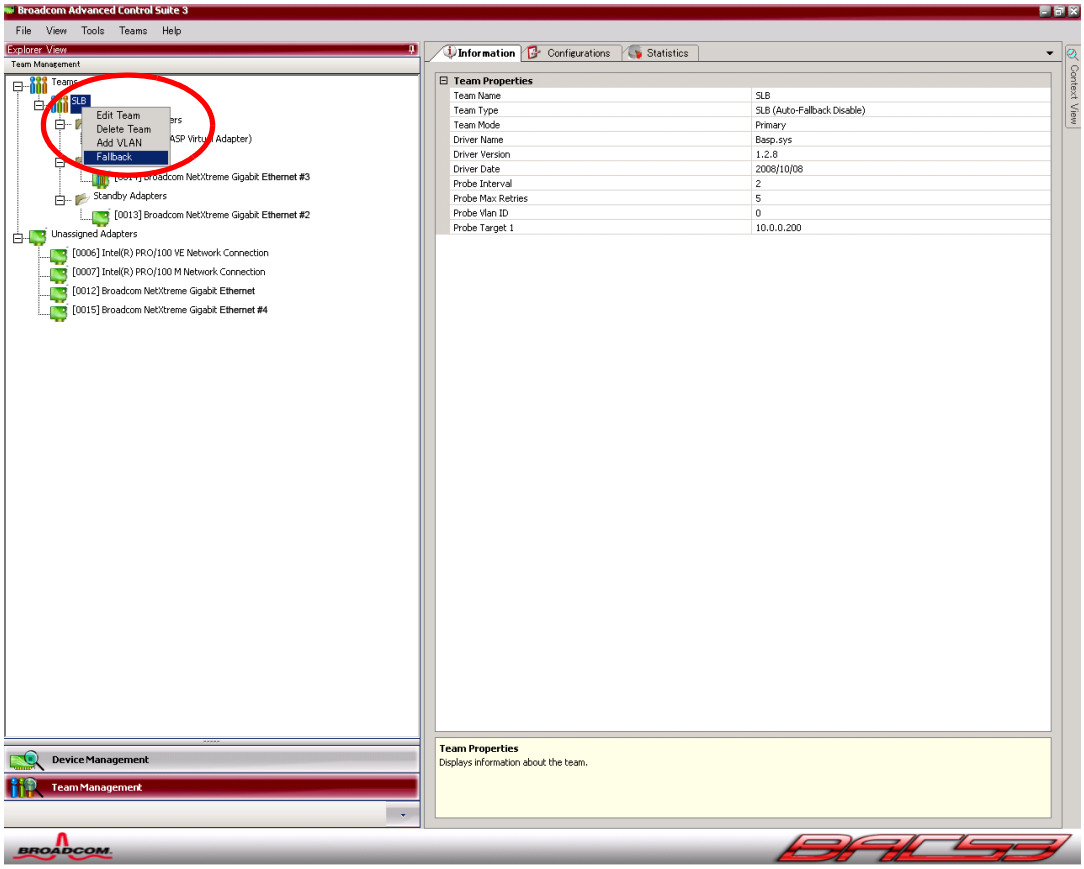

Figure B.1 SLB (Auto-Fallback Disable) window

- The function cannot be used under a Dynamic Host Configuration Protocol environment.
- Up to eight members can be specified.
- All team members must be configured by using Broadcom NeteXtreme Fiber.

- Broadcom Ethernet configuration (GSWB interface)

  Broadcom Ethernet ports of each IOU in the PRIMEQUEST 580A/540A/580/540 are connected to the IOU port of each GSWB as shown below.

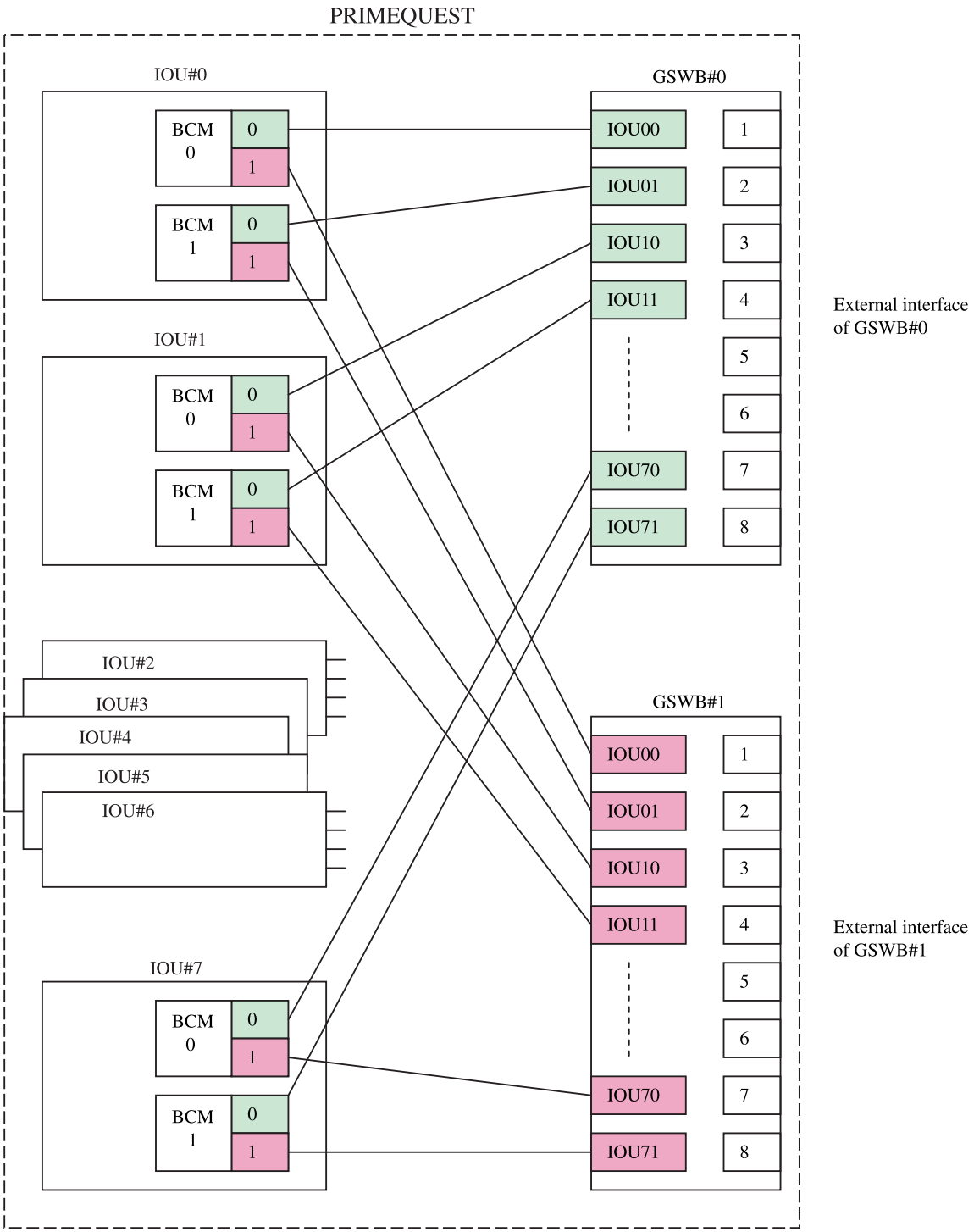

Figure B.2 Broadcom Ethernet configuration (GSWB interface)

- Method of identifying a physical port on the PRIMEQUEST 580A/540A/580/540

  1 Identify the physical position of a Broadcom Ethernet port to be controlled by BACS 3.
  A Broadcom Ethernet port is displayed on Windows Server 2008 OS (Device Manager) or BACS 3 (Broadcom Advanced Control Suite 3) as follows:
  "Broadcom NetXtreme Gigabit Fiber #<No>"
  Next, identify the physical position of the Broadcom Ethernet port by referring to the MAC address information on Ethernet ports.

  Confirm the MAC address of the Broadcom Ethernet port on the relevant IOU by using MMB Web UI.

  Example: [System] → [IOU] → [IOU#x]

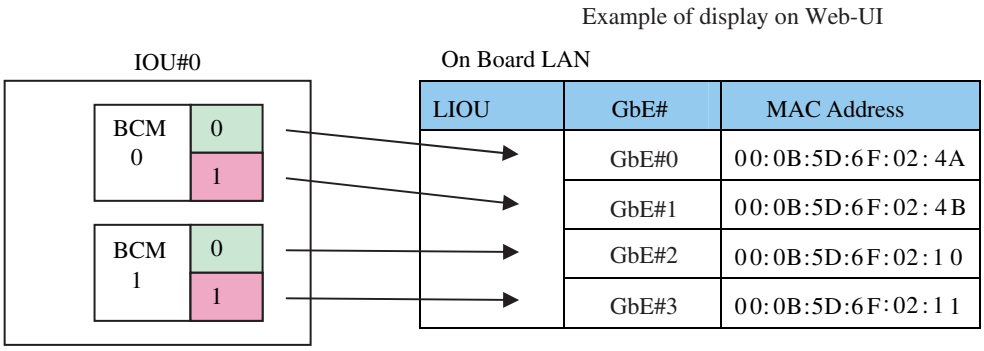

Figure B.3 Physical positions of Ethernet ports

2 Confirm the MAC address of "Broadcom NetXtreme Gigabit Fiber #<No>" on BACS 3 and identify the physical position.

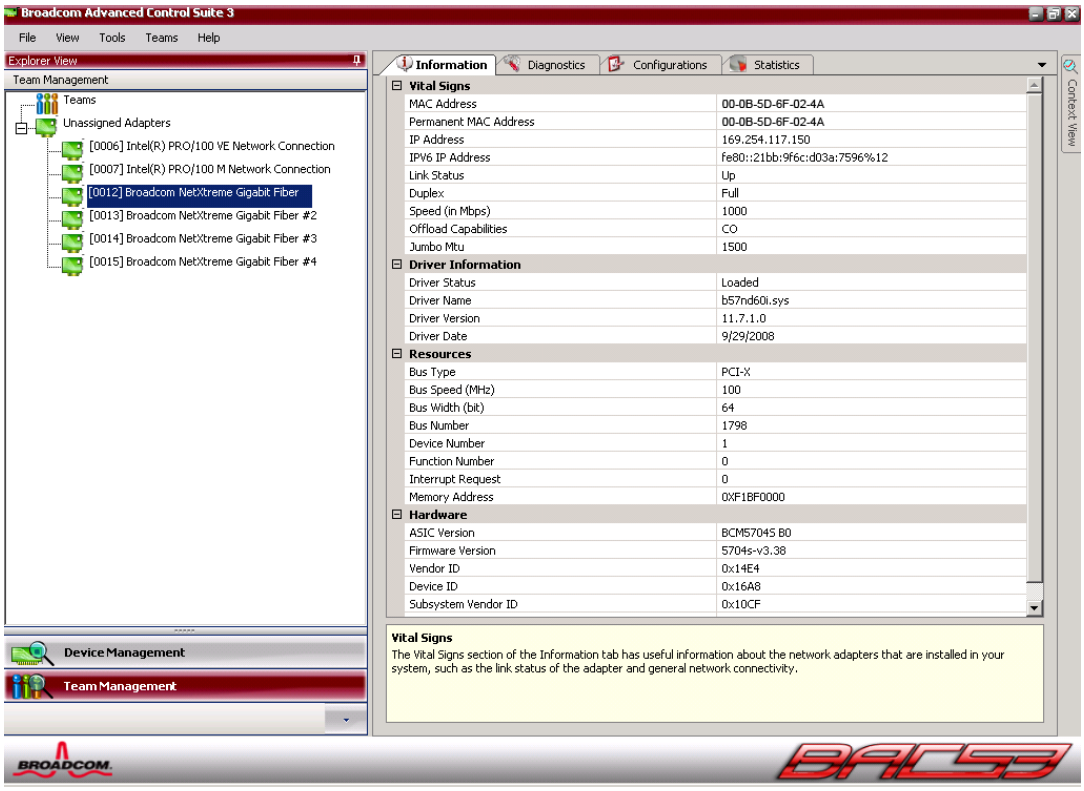

Figure B.4 [Broadcom Advanced Control Suite 3] window

- Notes on setting teams (multi-path setting) on the PRIMEQUEST 580A/540A/580/540
  The Broadcom Ethernet ports of each IOU are grouped as GSWB#1 and GSWB#2. When configured, Generic Trunking (FEC/GEC) only supports the group member configuration.

Example: When partitions are built up with IOU#0 and IOU#1, the configuration can consist of the following groups:

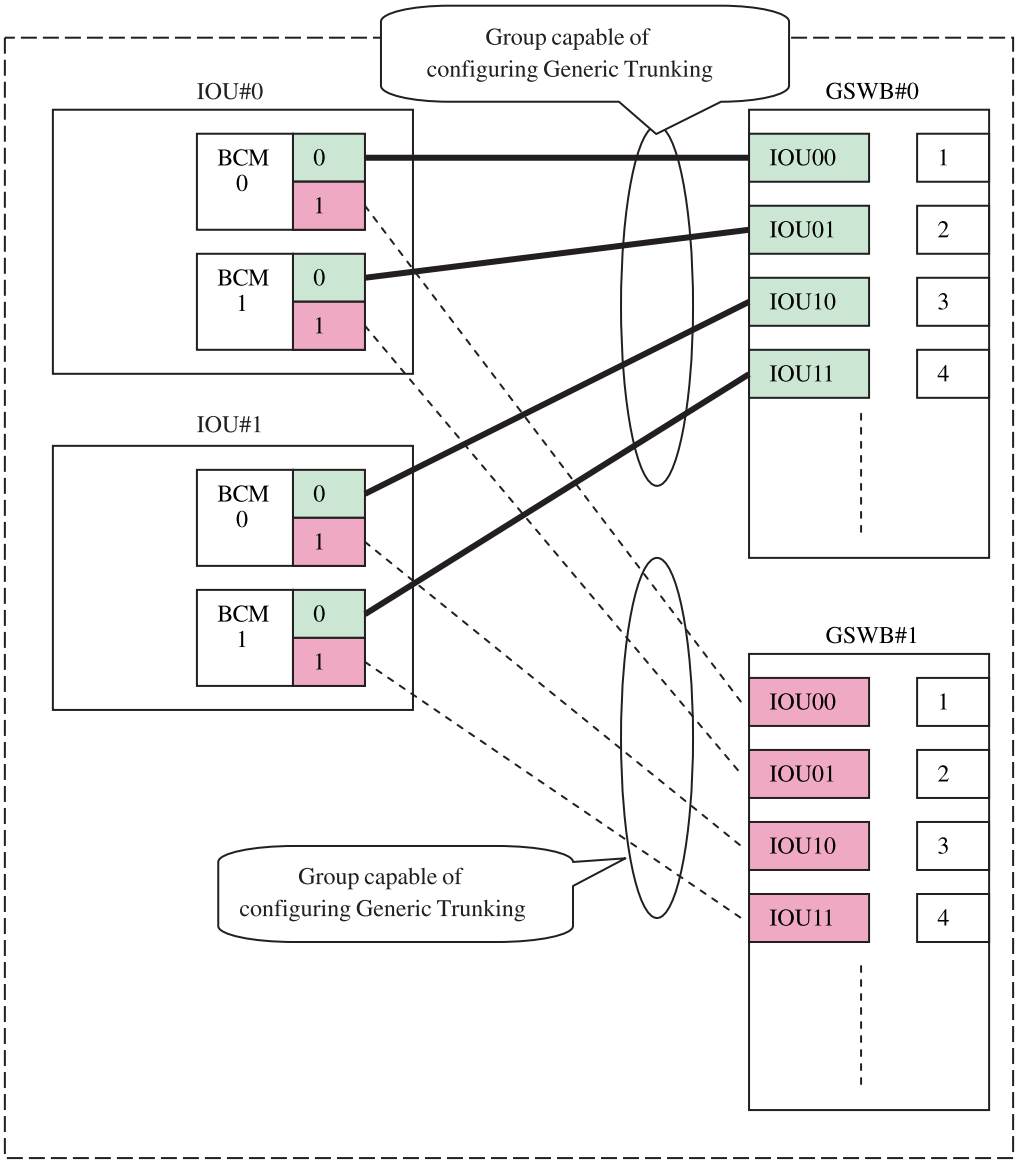

Figure B.5 Notes on team setting (BACS setting)
(PRIMEQUEST 580A/540A/580/540)

- Example 1 of Smart Load Balance (SLB) configuration

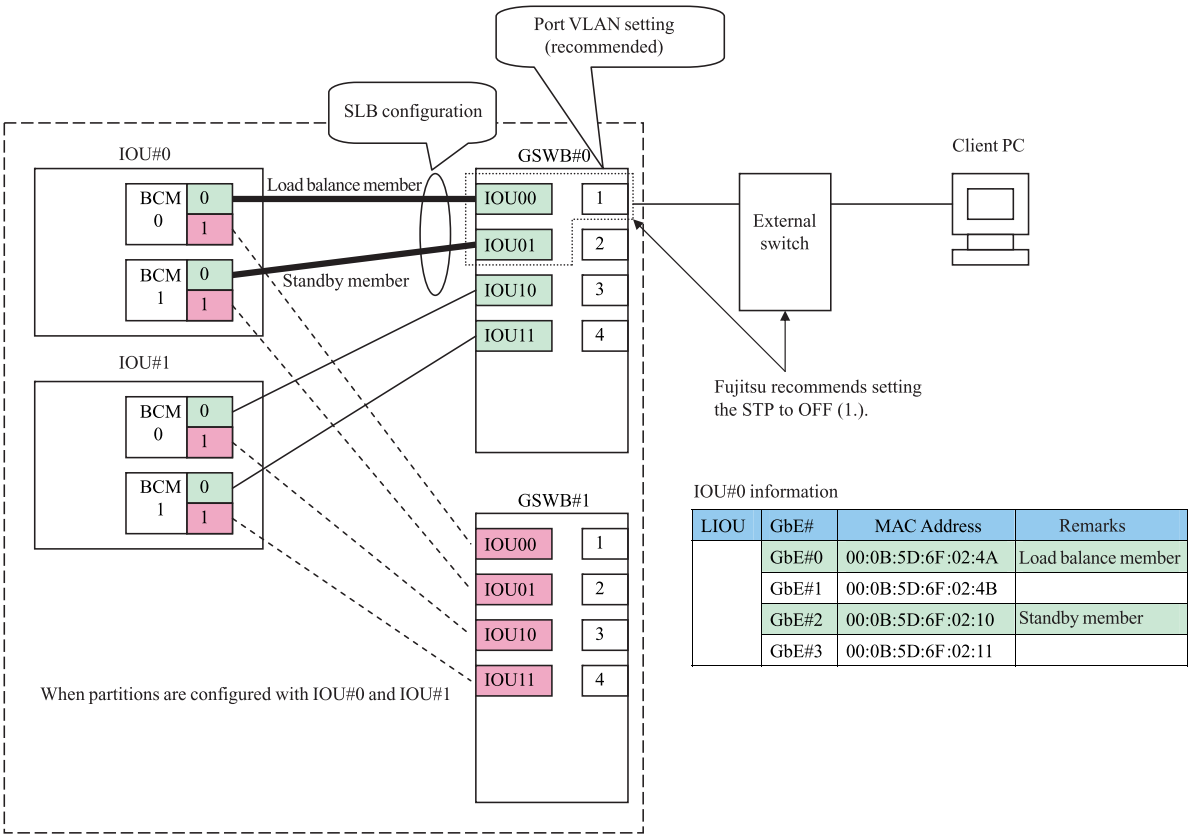

IOU#0 information

LIOU	GbE#	MAC Address	Remarks
	GbE#0	00:0B:5D:6F:02:4A	Load balance member
	GbE#1	00:0B:5D:6F:02:4B	
	GbE#2	00:0B:5D:6F:02:10	Standby member
	GbE#3	00:0B:5D:6F:02:11	

Note: As no network loop has been generated, Fujitsu recommends setting the STP to OFF.

Figure B.6 Example 1 of Smart Load Balance (SLB) configuration

For how to set a port VLAN in a GSWB, see Section 4.12, "VLAN Menu," of the "*PRIMEQUEST GSWB User's Manual*" (C122-E028EN).

- Example 2 of Smart Load Balance (SLB) configuration

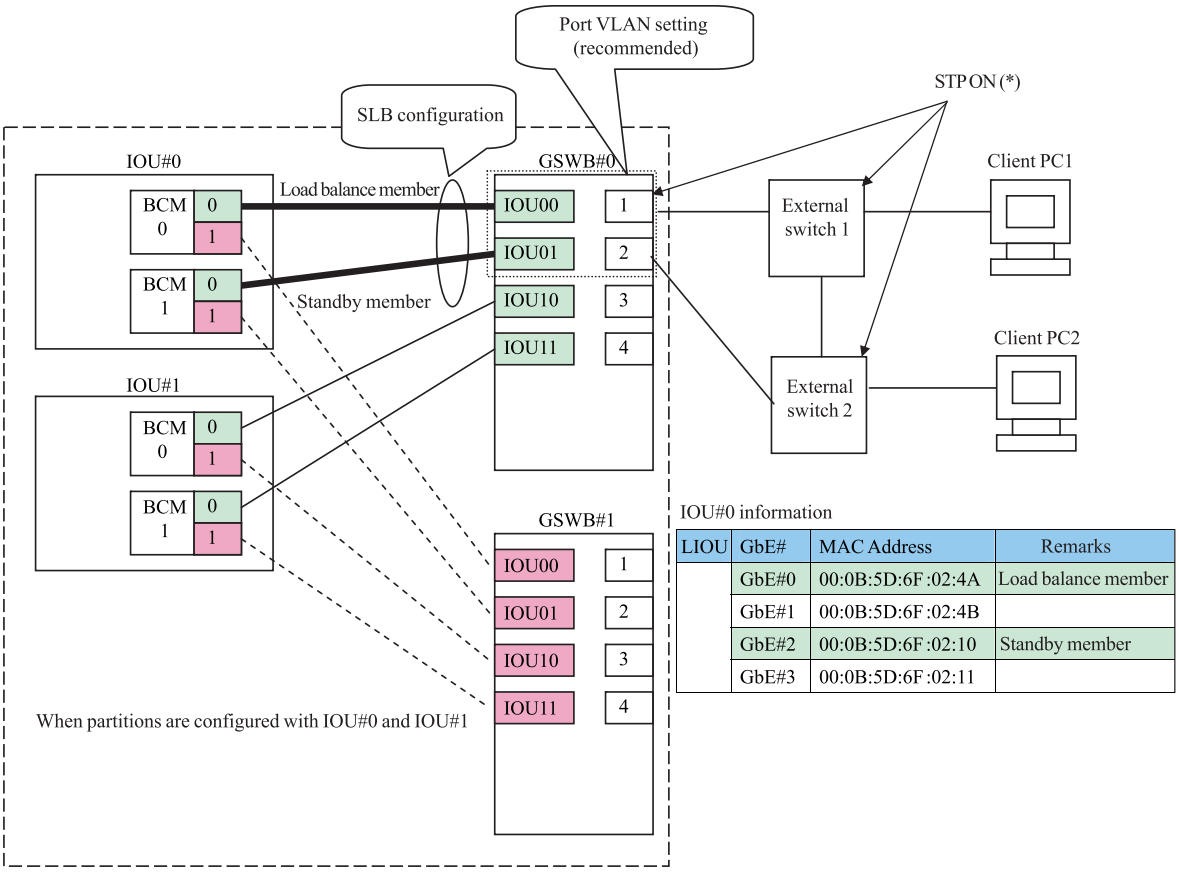

IOU#0 information

LIOU	GbE#	MAC Address	Remarks
	GbE#0	00:0B:5D:6F :02:4A	Load balance member
	GbE#1	00:0B:5D:6F :02:4B	
	GbE#2	00:0B:5D:6F :02:10	Standby member
	GbE#3	00:0B:5D:6F :02:11	

Note: As a network loop has been generated, set the STP to ON.

Figure B.7 Example 2 of Smart Load Balance (SLB) configuration

For how to set a port VLAN in a GSWB, see Section 4.12, "VLAN Menu," of the "*PRIMEQUEST GSWB User's Manual*" (C122-E028EN).

- Example 3 of Smart Load Balance (SLB) configuration

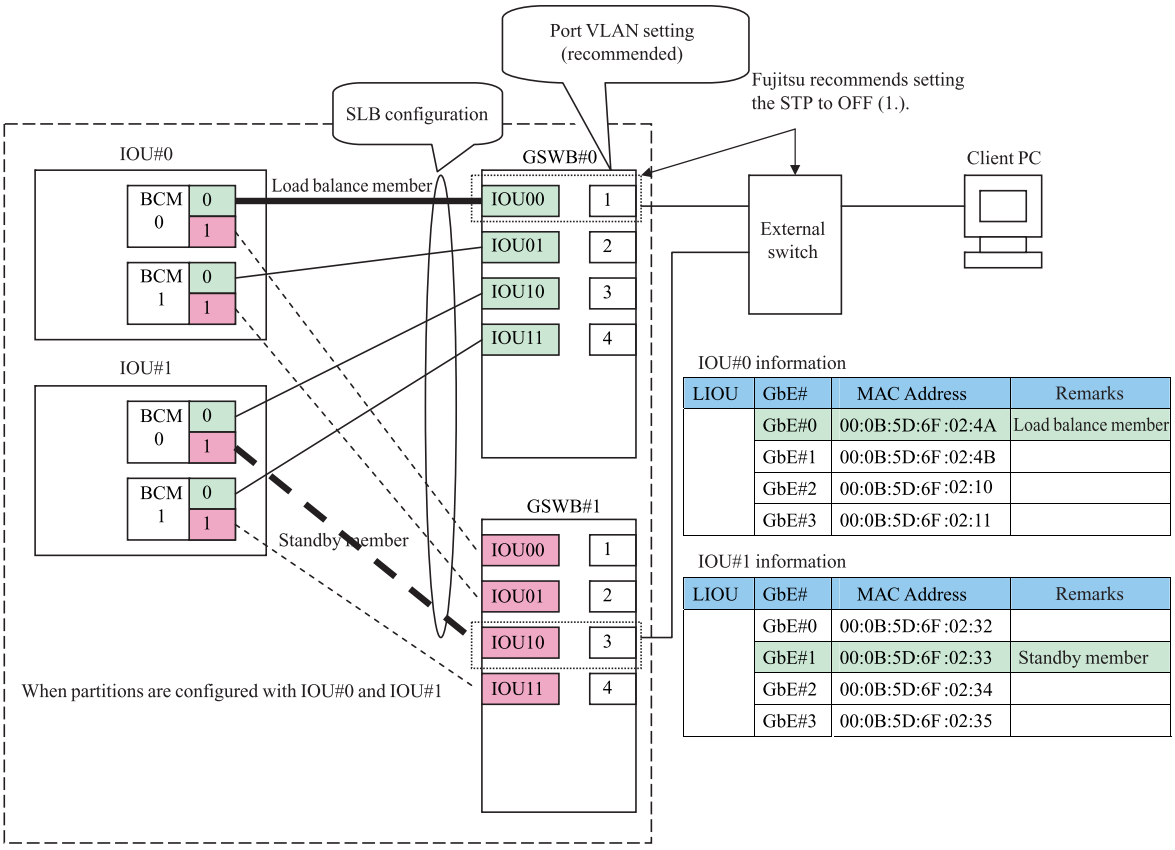

IOU#0 information

LIOU	GbE#	MAC Address	Remarks
	GbE#0	00:0B:5D:6F :02:4A	Load balance member
	GbE#1	00:0B:5D:6F :02:4B	
	GbE#2	00:0B:5D:6F :02:10	
	GbE#3	00:0B:5D:6F :02:11	

IOU#1 information

LIOU	GbE#	MAC Address	Remarks
	GbE#0	00:0B:5D:6F :02:32	
	GbE#1	00:0B:5D:6F :02:33	Standby member
	GbE#2	00:0B:5D:6F :02:34	
	GbE#3	00:0B:5D:6F :02:35	

Note: As no network loop has been generated, Fujitsu recommends setting the STP to OFF.

Figure B.8 Example 3 of Smart Load Balance (SLB) configuration

For how to set a port VLAN in a GSWB, see Section 4.12, "VLAN Menu," of the "*PRIMEQUEST GSWB User's Manual*" (C122-E028EN).

- Example 1 of Smart Load Balance (SLB + LiveLink) configuration

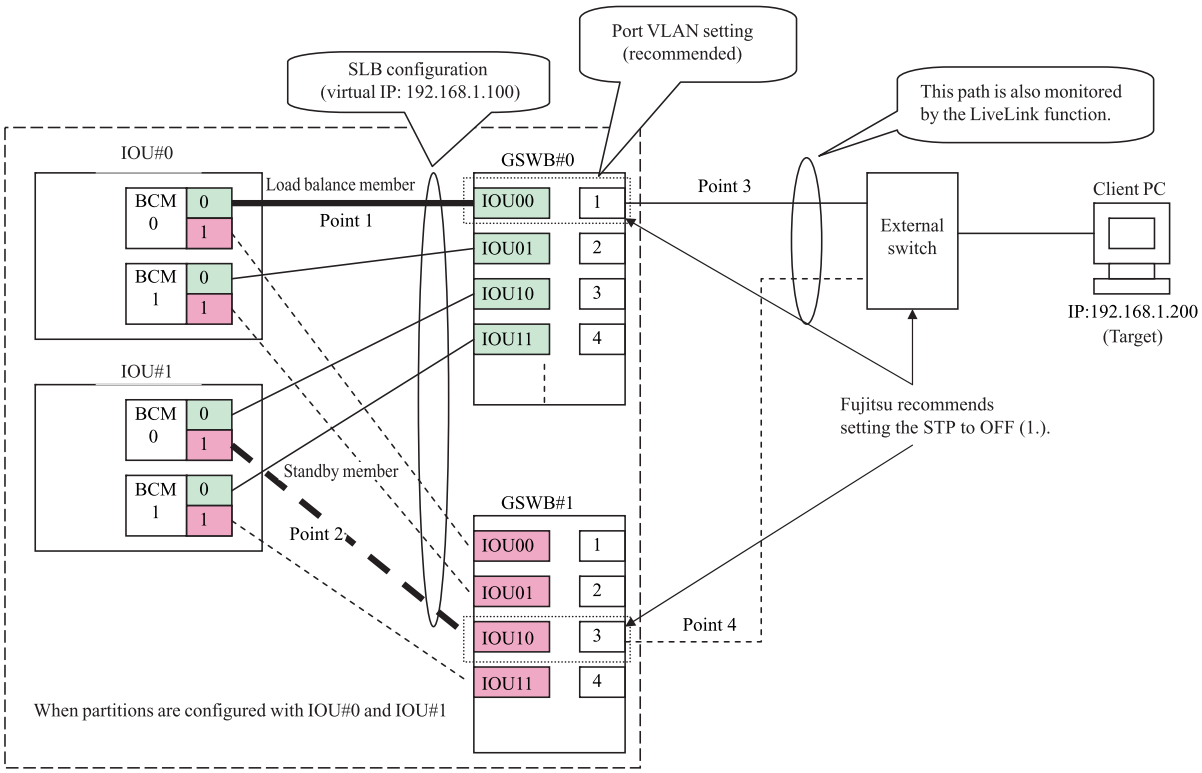

Note: As no network loop has been generated, Fujitsu recommends setting the STP to OFF.

Figure B.9 Example 1 of Smart Load Balance (SLB + LiveLink) configuration

For how to set a port VLAN in a GSWB, see Section 4.12, "VLAN Menu," of the "*PRIMEQUEST GSWB User's Manual*" (C122-E028EN).

- Example 2 of Smart Load Balance (SLB + LiveLink) configuration

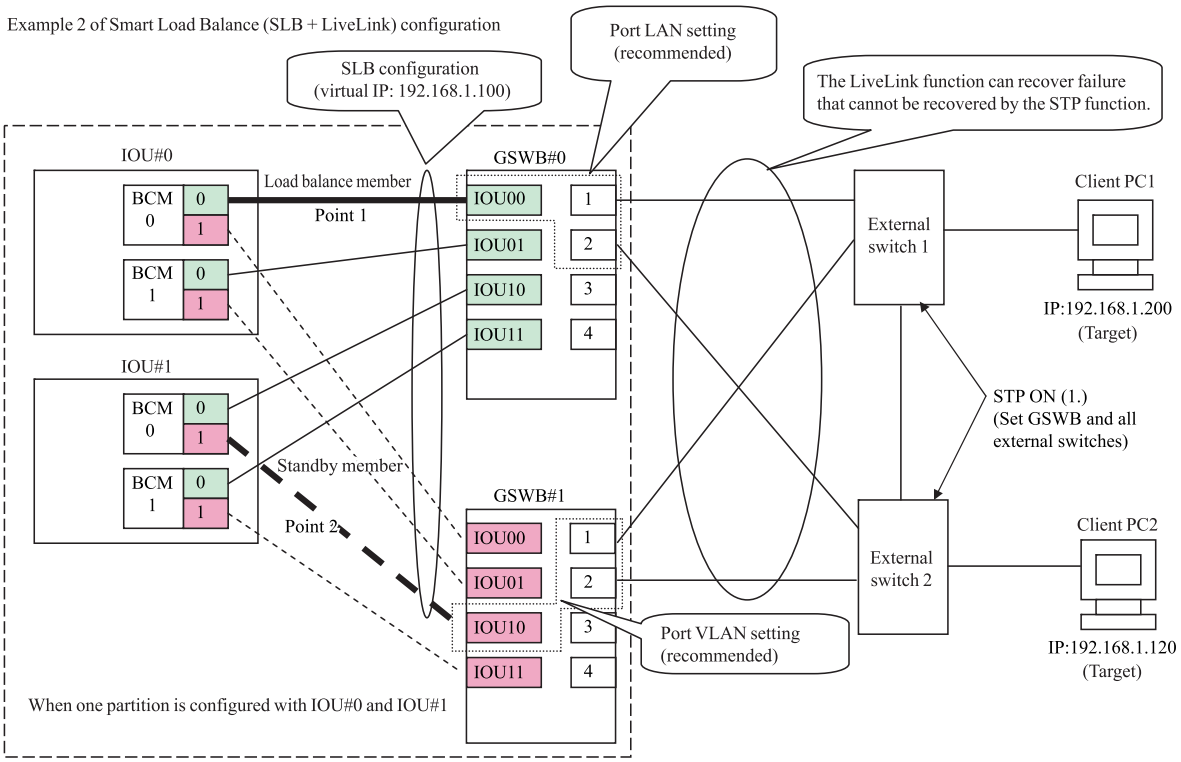

Note: As a network loop has been generated, set the STP to ON. GSWB and all external switches need to be set.

Figure B.10 Example 2 of Smart Load Balance (SLB + LiveLink) configuration

For how to set a port VLAN in a GSWB, see the "*PRIMEQUEST GSWB User's Manual*" (C122-E028EN).

B.1.1 Broadcom LiveLink settings

The conventional SLB (Smart Local Balancing) function can only detect a link error between the Broadcom Ethernet chip and nearest Ethernet device, and perform recovery to the secondary side (by switching traffic). Conversely, the LiveLink function detects link errors over switches and performs traffic switching to a normal route.

(The function periodically checks communications between respective team members and respective targets, and switches to the secondary route if communication on the primary route fails.)

- Points where errors can be detected and recovered by the SLB function: Point 1 and point 2
- Points where errors can be detected and recovered by the SLB + LiveLink function: Point 1, point 2, point 3, and point 4 (See Figure B.9, "Example 1 of Smart Load Balance (SLB + LiveLink) configuration.")

● Notes on using LiveLink

- LiveLink is only available for Smart Load Balance and Failover.
- LiveLink cannot be used on Tag VLAN.
- The target must be on a subnet where a team member exists.
- Up to four targets can be specified.
- The time delay (switching time) between initial path error detection and actual switching is determined based on "Probe interval" and "Maximum retransmission number of probe."
  Switching time = "Probe interval" x "Maximum retransmission number of probe"
- This function does not include the Auto-Fallback Disable function. Therefore, when the primary route is recovered from error status to normal status, traffic is automatically switched from the secondary route to the primary route.
- The time delay during switch back from the secondary route to the primary route following recovery of a path from error status is calculated as follows: "Probe interval" x "Maximum retransmission number of probe."
- If multiple targets are set, the system switches to the secondary route when all link loss is detected between the primary route and the target (for cases where at least 1 link between the secondary route and the target is normal.)

Table B.1 Broadcom LAN information of IO unit

IOU#0 information

LIOU	GbE#	MAC Address	Fixed IP address	Remarks
	GbE#0	00:0B:5D:6F:02:4A	192.168.1.10	Load balance member
	GbE#1	00:0B:5D:6F:02:4B		
	GbE#2	00:0B:5D:6F:02:10		
	GbE#3	00:0B:5D:6F:02:11		

IOU#1 information

LIOU	GbE#	MAC Address	Fixed IP address	Remarks
	GbE#0	00:0B:5D:6F:02:32		
	GbE#1	00:0B:5D:6F:02:33	192.168.1.11	Standby member
	GbE#2	00:0B:5D:6F:02:34		
	GbE#3	00:0B:5D:6F:02:35		

Remarks: The function periodically checks the normality of paths between the fixed IP: 192.168.1.10 (192.168.1.11) and client PC of IP: 192.168.1.200. If the local path fails, this function switches between the load balance member and standby member on the Broadcom Ethernet chip.

- Example of Generic Trunking (GEC/FEC) configuration

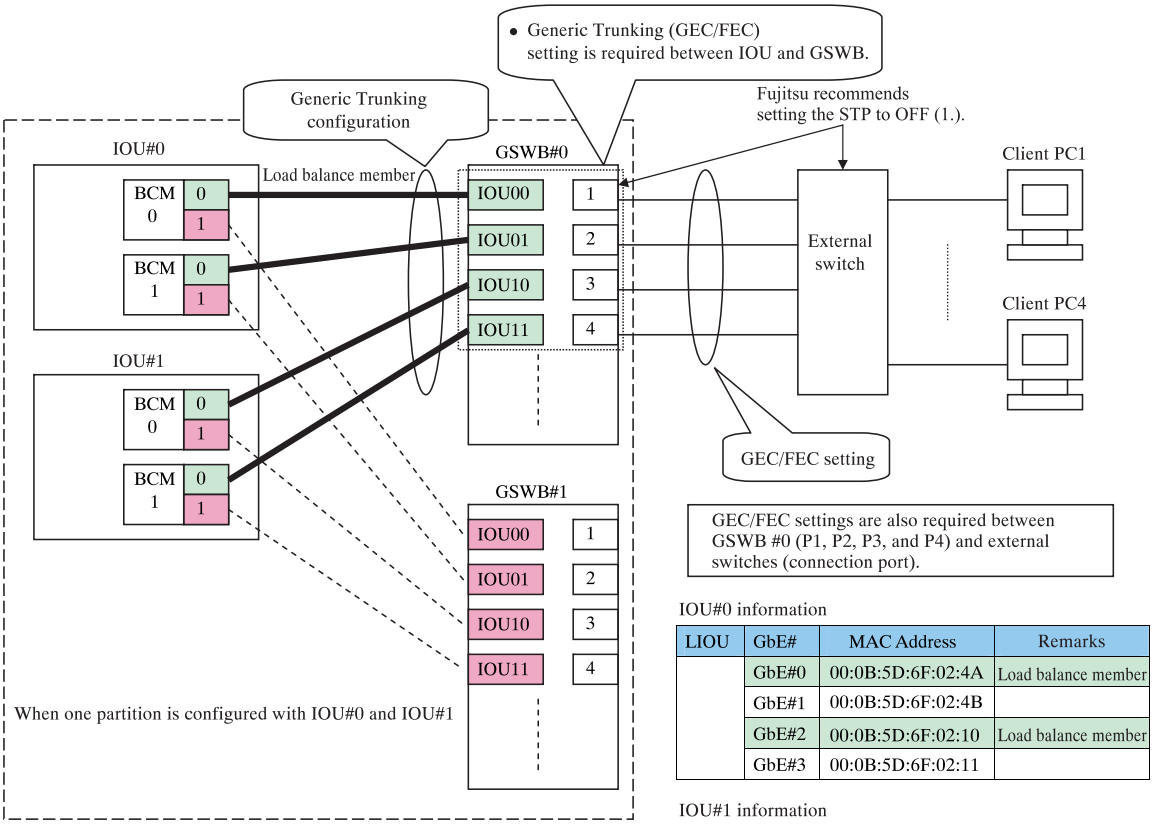

IOU#0 information

LIOU	GbE#	MAC Address	Remarks
	GbE#0	00:0B:5D:6F:02:4A	Load balance member
	GbE#1	00:0B:5D:6F:02:4B	
	GbE#2	00:0B:5D:6F:02:10	Load balance member
	GbE#3	00:0B:5D:6F:02:11	

IOU#1 information

LIOU	GbE#	MAC Address	Remarks
	GbE#0	00:0B:5D:6F:02:32	Load balance member
	GbE#1	00:0B:5D:6F:02:33	
	GbE#2	00:0B:5D:6F:02:34	Load balance member
	GbE#3	00:0B:5D:6F:02:35	

Note: As no network loop has been generated, Fujitsu recommends setting the STP to OFF.

Figure B.11 Example of Generic Trunking (GEC/FEC) configuration

For how to set a port VLAN in a GSWB, see Section 4.12, "VLAN Menu," of the "*PRIMEQUEST GSWB User's Manual*" (C122-E028EN).

For how to set GEC/FEC in a GSWB, see Section 4.14, "Channel Group Menu," of the "*PRIMEQUEST GSWB User's Manual*" (C122-E028EN).

For how to set Generic Trunking for IOU, see 5.2.11, "Port ranking function," of the "*PRIMEQUEST GSWB User's Manual*" (C122-E028EN)

B.2 Outline (PRIMEQUEST 520A/510A/520)

The Teaming function (multi-path function) using Broadcom Ethernet supports the following on the PRIMEQUEST 520A/510A/520:

The Teaming function also uses the BASP (Broadcom Advanced Server Program) function within the BACS3 (Broadcom Advanced Control Suite 3) utility.

(1) Smart Load Balance and Fail Over (+LiveLink)

This function disperses load among load balance members. If all members are encountering trouble, traffic is transferred to a standby member.

Upon the recovery of one or more load balance members, traffic is switched from the standby member to a load balance member. The LiveLink function is only available in this mode.

Remarks: The Livelink function monitors for link loss between all load balance members and the specified target and transfers traffic to normally operating load balance members.

(2) Generic Trunking (FEC/GEC)/802.3ad-Draft Static

This is a load balance function that uses PagP (Port Aggregation Protocol). A switch to be interfaced must have this function or an equivalent one. This function also actualizes fail-over among load balance members.

(3) Link Aggregation (802.3ad)

This is a load balance function that uses LACP (Link Aggregation Control Protocol). A switch to be interfaced must have this function or an equivalent one. This function also actualizes fail-over among load balance members.

(4) SLB (Auto-Fallback Disable) (+LiveLink)

This function is basically the same as (1) "Smart Load Balance and Fail Over" but does not switch traffic from a standby member to a load balance member automatically.

Remarks: The Link Aggregation (802.3ad) function is not supported.

Notes:

- The message "Broadcom 5704C chip is not supported" is output, but operation can continue without being affected.

- STP should be disabled when configuring SLB without using the LiveLink function.
  Doing so enables the down time to be kept to a minimum when determining the spanning tree loop at the onset of a fail over.
- BASP (Broadcom Advanced Server Program: Teaming Software) does not support Microsoft Network Load Balancing (NLB).
- BASP (Broadcom Advanced Server Program: Teaming Software) operations require that the user be logged in with Administrator privileges.
- A team configuration name should be a character string from 1 to 39 characters in length.
- A team name must not begin with a space or contain any of the following characters:
  & \ / : * ? < > | "
- A team name must be unique.
- When using the Generic Trunking function, you cannot specify a standby member.
- When using the Link Aggregation (802.3ad) function, you cannot specify a standby member.
- The virtual adapter cannot be made redundant.
- To switch traffic back to a load balance member from a standby member using SLB (Auto-Fallback Disable), right-click the created virtual adapter in [Broadcom Advanced Control Suite 3] and then click [Fallback].

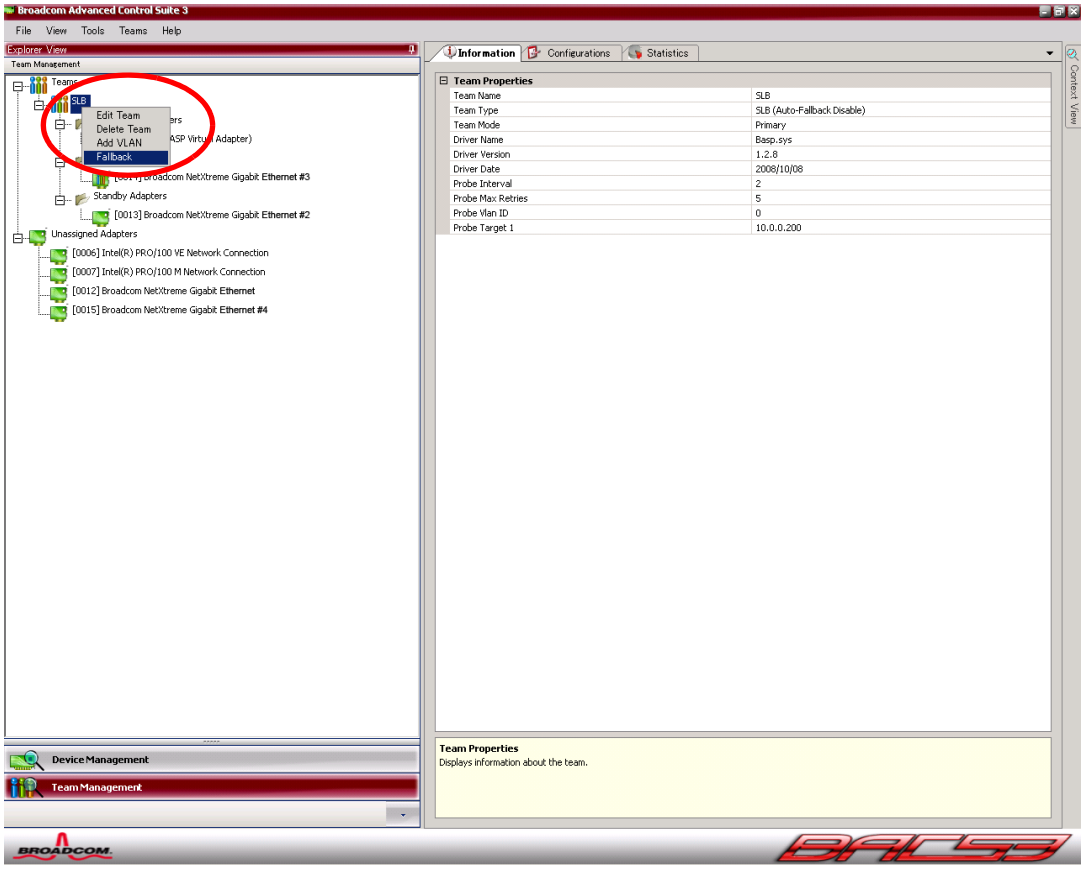

Figure B.12 SLB (Auto-Fallback Disable) window

- The function cannot be used under a Dynamic Host Configuration Protocol environment.
- Up to eight members can be specified.
- All team members must be configured by using Broadcom NetXtreme Gigabit Ethernet.

- Method of identifying a physical port on the PRIMEQUEST 520A/520

1 Identify the physical position of a Broadcom Ethernet port to be controlled by BACS 3.

A Broadcom Ethernet port is displayed on Windows Server 2008 OS (Device Manager) or BACS 3 (Broadcom Advanced Control Suite 3) as follows:

"Broadcom NetXtreme Gigabit Fiber #<No>"

Next, identify the physical position of the Broadcom Ethernet port by referring to the MAC address information on Ethernet ports.

Confirm the MAC address of the Broadcom Ethernet port on the relevant IOU by using Web UI.

Example: WEB-UI -[System] - [IOU] - [IOU]

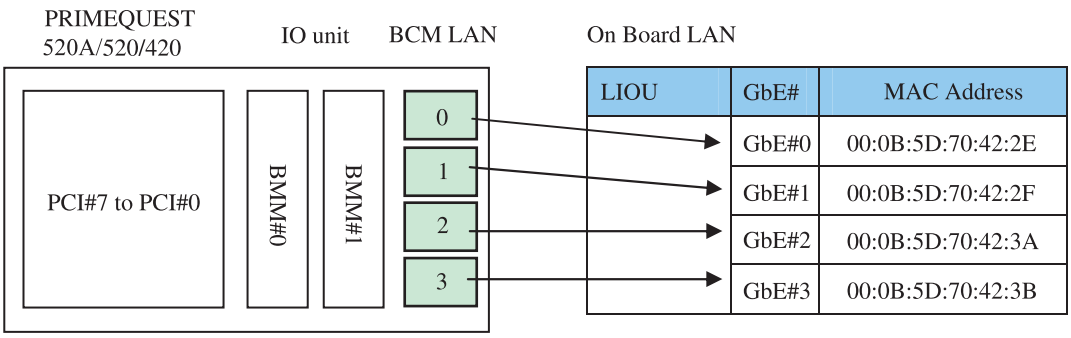

Figure B.13 Physical positions of Ethernet ports (PRIMEQUEST 520A/520/420)

2 Confirm the MAC address of "Broadcom NetXtreme Gigabit Ethernet #<No>" on BACS 3 and identify the physical position.

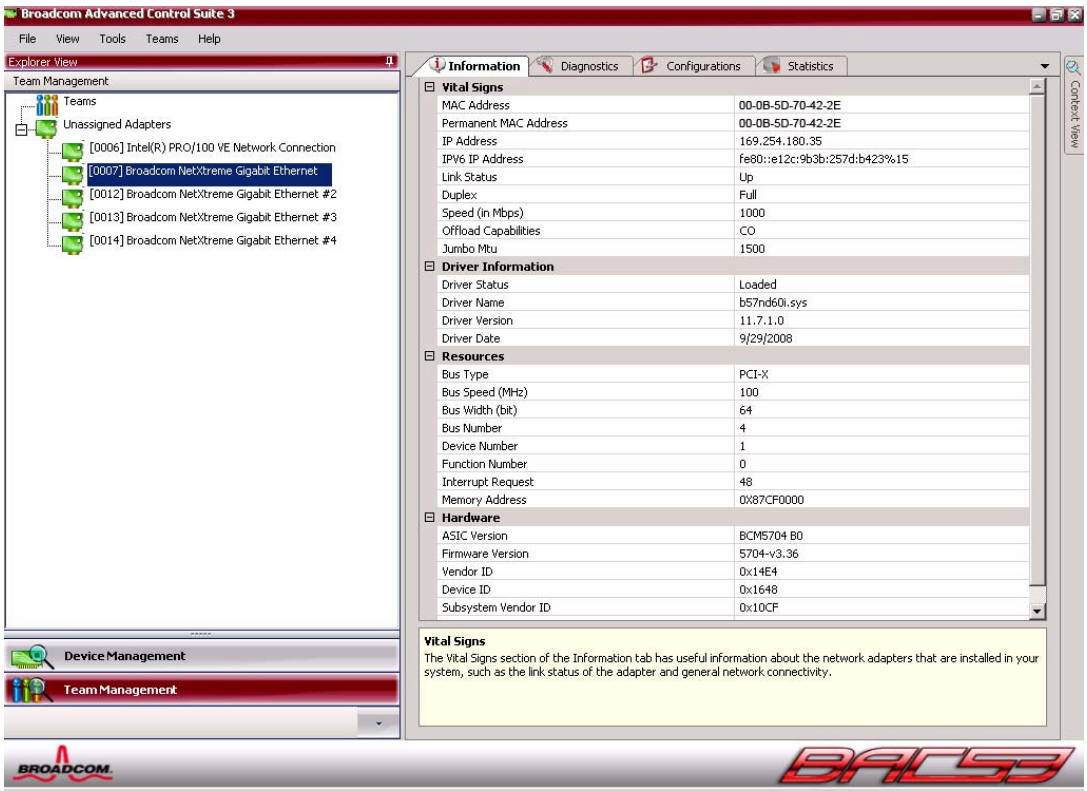

Figure B.14 [Broadcom Advanced Control Suite 3] window

- Method of identifying a physical port on the PRIMEQUEST 510A

  1 Identify the physical position of a Broadcom Ethernet port to be controlled by BACS 3.
  A Broadcom Ethernet port is displayed on Windows Server 2008 OS (Device Manager) or BACS 3 (Broadcom Advanced Control Suite 3) as follows:
  "Broadcom NetXtreme Gigabit Ethernet #<No>"

  Next, identify the physical position of the Broadcom Ethernet port by referring to the MAC address information on Ethernet ports.

  Confirm the MAC address of the Broadcom Ethernet port on the relevant BB by using Web UI.

  Example: WEB-UI -[System] - [BB]

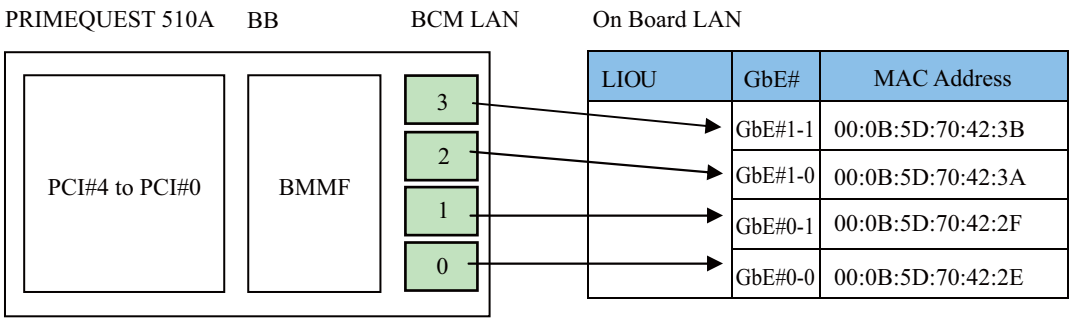

Figure B.15 Physical positions of Ethernet ports (PRIMEQUEST 510A)

2 Confirm the MAC address of "Broadcom NetXtreme Gigabit Ethernet #<No>" on BACS 3 and identify the physical position.

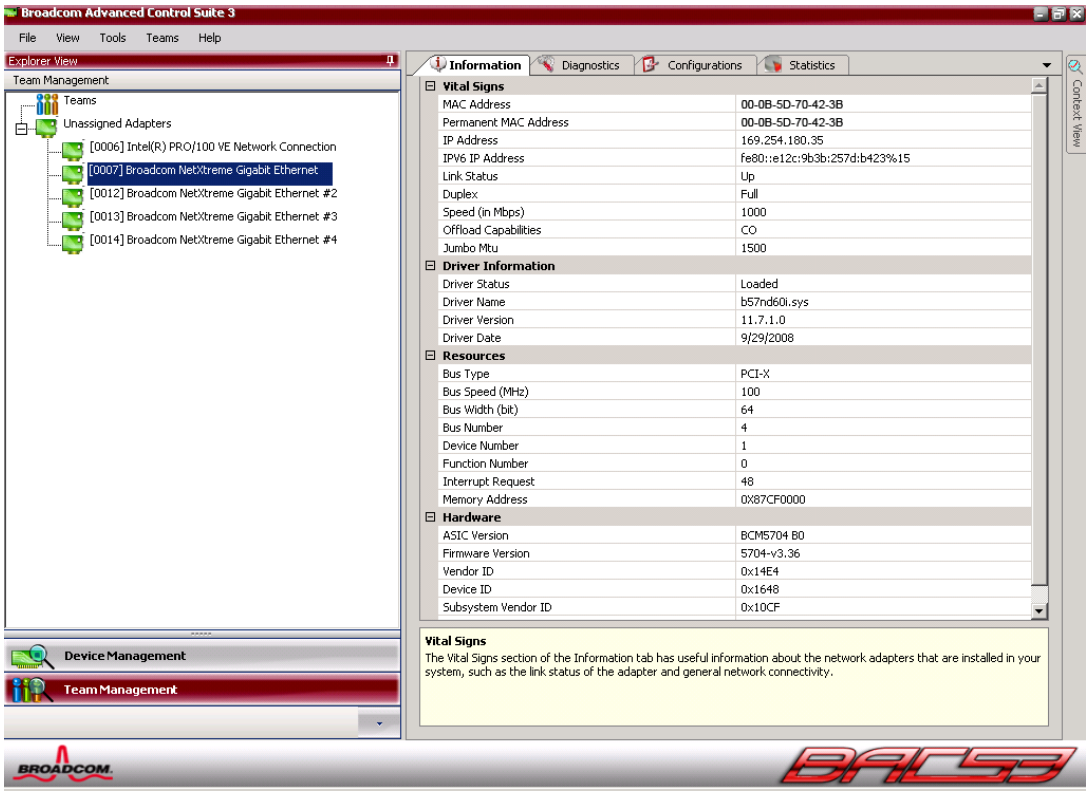

Figure B.16 [Broadcom Advanced Control Suite 3] dialog box

- Example 1 of Smart Load Balance (SLB) configuration (PRIMEQUEST 520A/520)

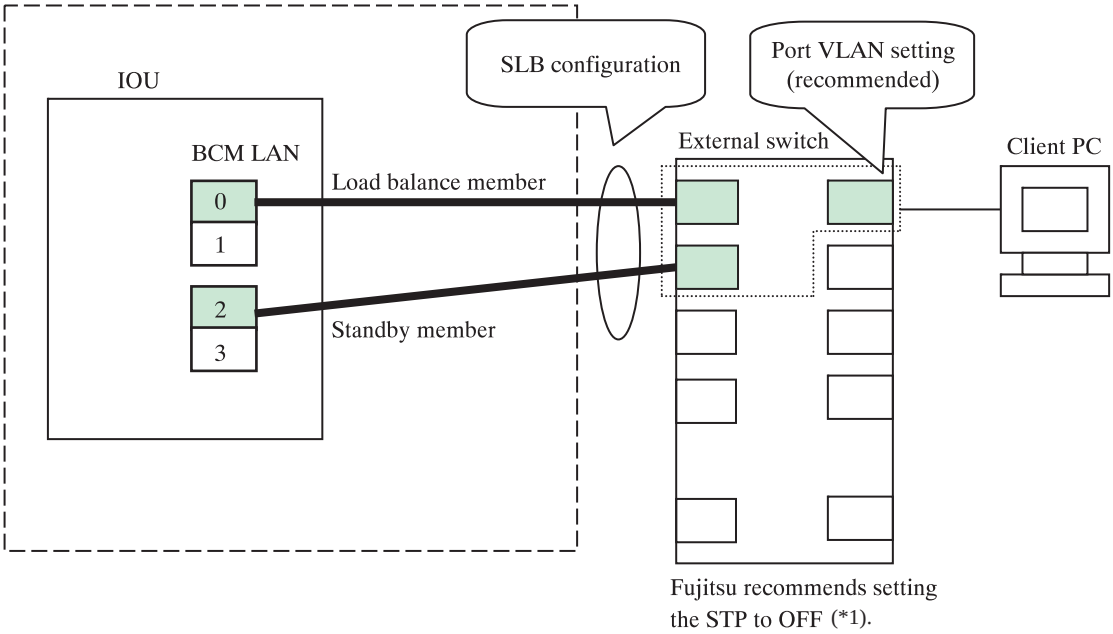

IO unit Broadcom LAN information

LIOU	GbE#	MAC Address	Remarks
	GbE#0	00:0B:5D:70:42:2E	Load balance member
	GbE#1	00:0B:5D:70:42:2F	
	GbE#2	00:0B:5D:70:42:3A	Standby member
	GbE#3	00:0B:5D:70:42:3B	

Note: As no network loop has been generated, Fujitsu recommends setting the STP to OFF.

Figure B.17 Example 1 of Smart Load Balance (SLB) configuration (PRIMEQUEST 520A/520)

- Example 1 of Smart Load Balance (SLB) configuration (PRIMEQUEST 510A)

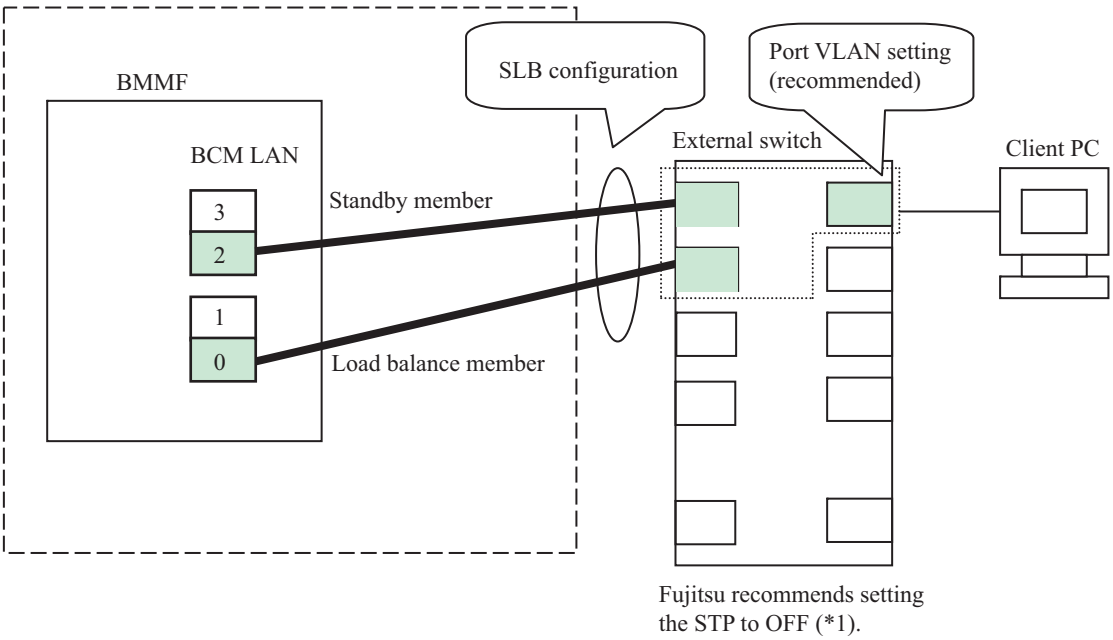

BMMF Broadcom LAN information

LIOU	GbE#	BMC LAN number	MAC Address	Remarks
	GbE#0-0	0	00:0B:5D:70:42:2E	Load balance member
	GbE#0-1	1	00:0B:5D:70:42:2F	
	GbE#1-0	2	00:0B:5D:70:42:3A	Standby member
	GbE#1-1	3	00:0B:5D:70:42:3B	

*1: As no network loop has been generated, Fujitsu recommends setting the STP to OFF.

Figure B.18 Example 1 of Smart Load Balance (SLB) configuration (PRIMEQUEST 510A)

- Example 2 of Smart Load Balance (SLB) configuration (PRIMEQUEST 520A/520)

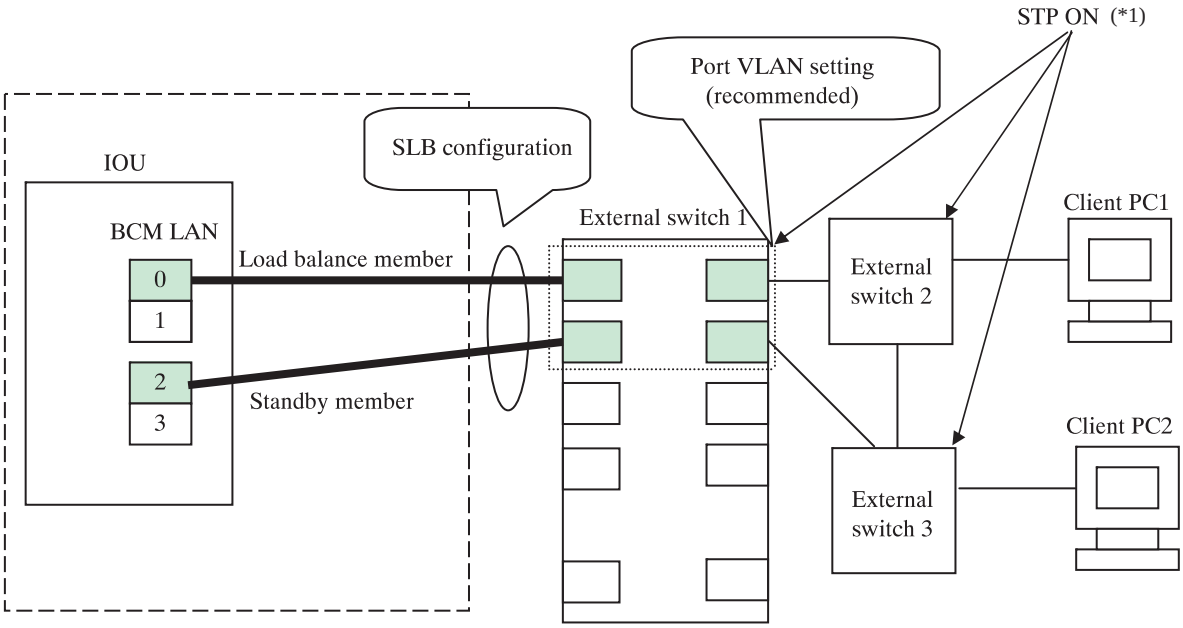

IO unit Broadcom LAN information

LIOU	GbE#	MAC Address	Remarks
	GbE#0	00:0B:5D:70:42:2E	Load balance member
	GbE#1	00:0B:5D:70:42:2F	
	GbE#2	00:0B:5D:70:42:3A	Standby member
	GbE#3	00:0B:5D:70:42:3B	

Note: As a network loop has been generated, set the STP to ON.

Figure B.19 Example 2 of Smart Load Balance (SLB) configuration (PRIMEQUEST 520A/520)

- Example 2 of Smart Load Balance (SLB) configuration (PRIMEQUEST 510A)

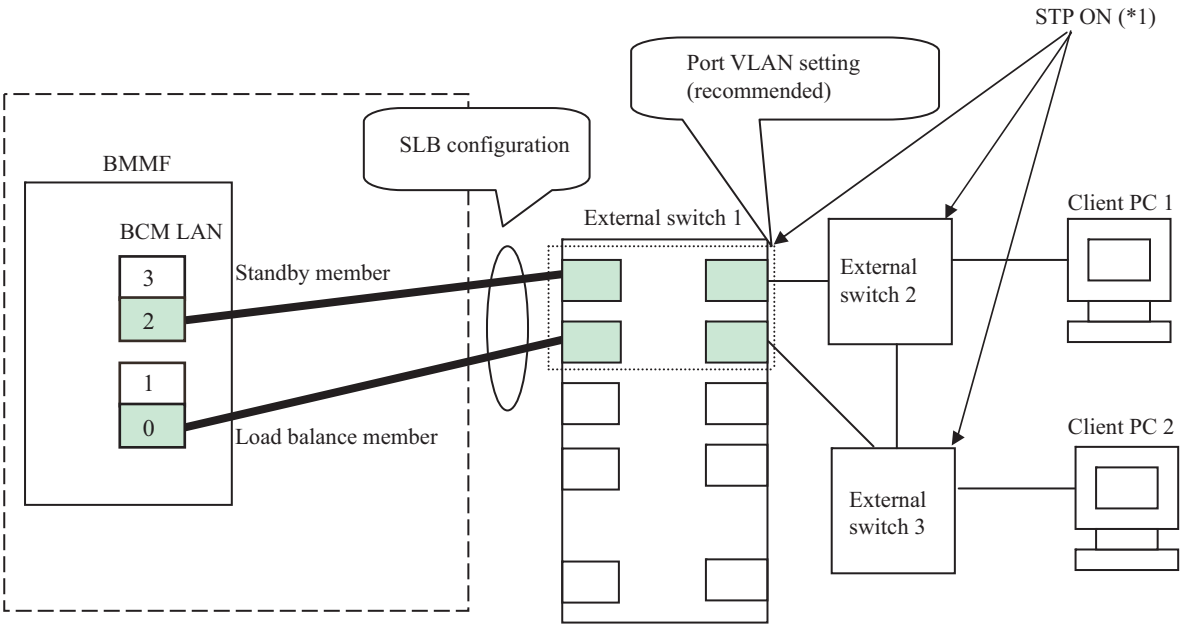

BMMF Broadcom LAN information

LIOU	GbE#	BMC LAN number	MAC Address	Remarks
	GbE#0-0	0	00:0B:5D:70:42:2E	Load balance member
	GbE#0-1	1	00:0B:5D:70:42:2F	
	GbE#1-0	2	00:0B:5D:70:42:3A	Standby member
	GbE#1-1	3	00:0B:5D:70:42:3B	

*1: As a network loop has been generated, set the STP to ON.

Figure B.20 Example 2 of Smart Load Balance (SLB) configuration (PRIMEQUEST 510A)

- Example 1 of Smart Load Balance (SLB + LiveLink) configuration (PRIMEQUEST 520A/520)

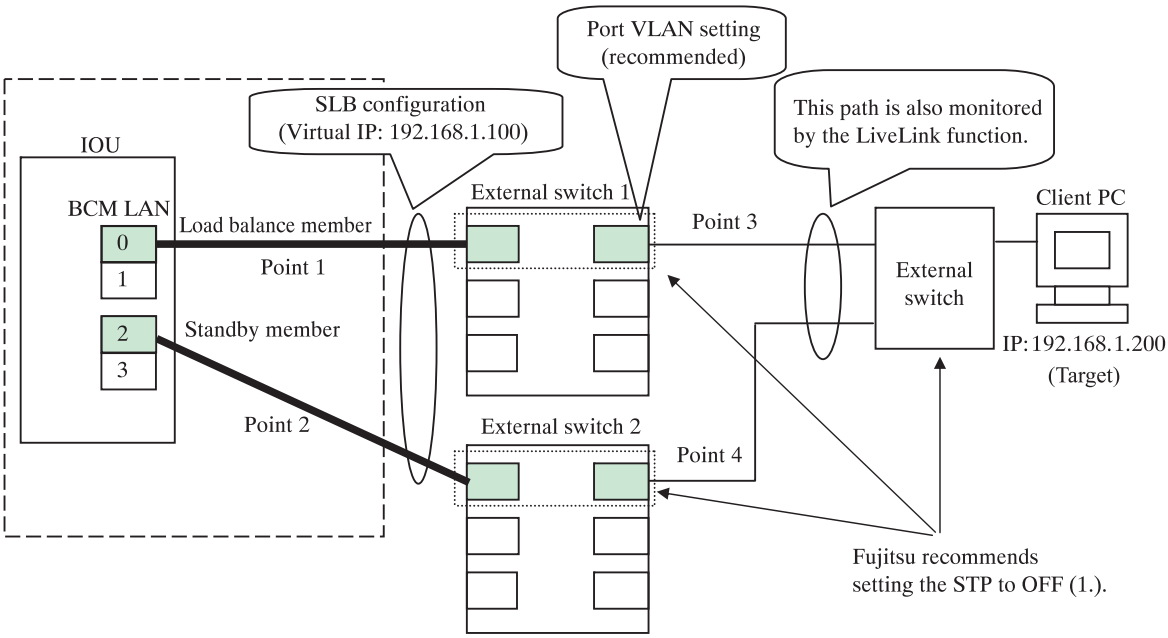

IO unit Broadcom LAN information

LIOU	GbE#	MAC Address	Remarks
	GbE#0	00:0B:5D:70:42:2E	Load balance member
	GbE#1	00:0B:5D:70:42:2F	
	GbE#2	00:0B:5D:70:42:3A	Standby member
	GbE#3	00:0B:5D:70:42:3B	

Note: As no network loop has been generated, Fujitsu recommends setting the STP to OFF.

Figure B.21 Example 1 of Smart Load Balance (SLB) configuration (PRIMEQUEST 520A/520)

- Example 1 of Smart Load Balance (SLB + LiveLink) configuration (PRIMEQUEST 510A)

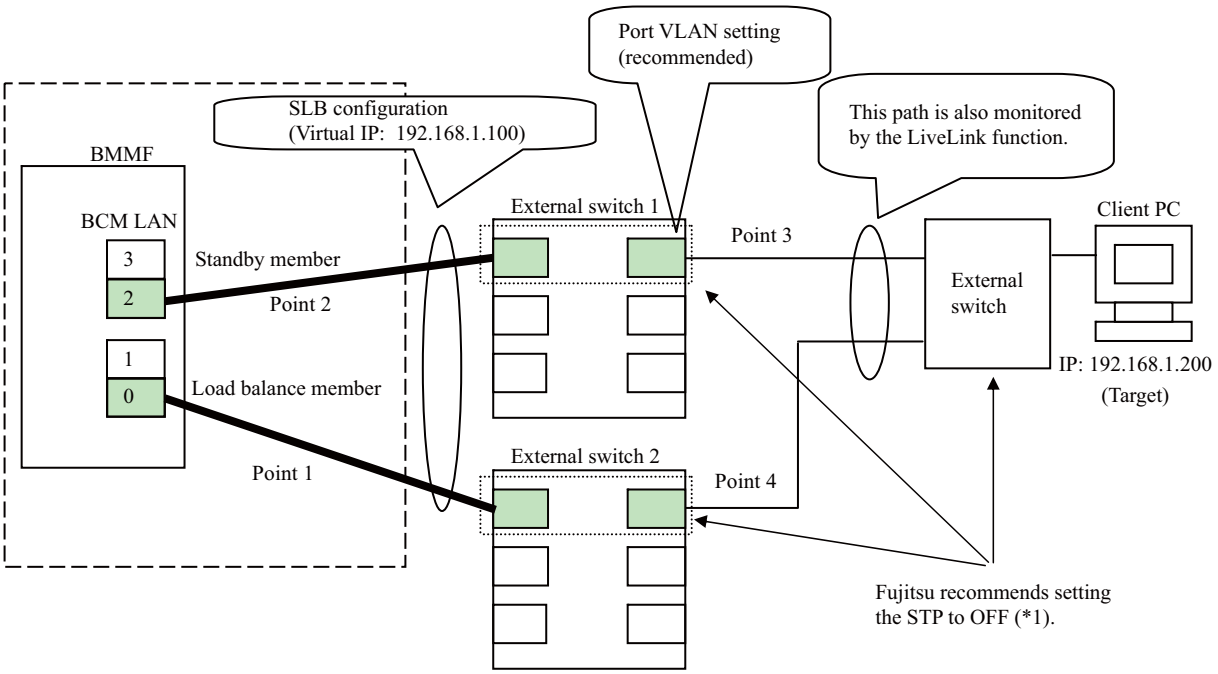

BMMF Broadcom LAN information

LIOU	GbE#	BMC LAN number	MAC Address	Remarks
	GbE#0-0	0	00:0B:5D:70:42:2E	Load balance member
	GbE#0-1	1	00:0B:5D:70:42:2F	
	GbE#1-0	2	00:0B:5D:70:42:3A	Standby member
	GbE#1-1	3	00:0B:5D:70:42:3B	

*1: As no network loop has been generated, Fujitsu recommends setting the STP to OFF.

Figure B.22 Example 1 of Smart Load Balance (SLB + LiveLink) configuration (PRIMEQUEST 510A)

- Example 2 of Smart Load Balance (SLB + LiveLink) configuration (PRIMEQUEST 520A/520)

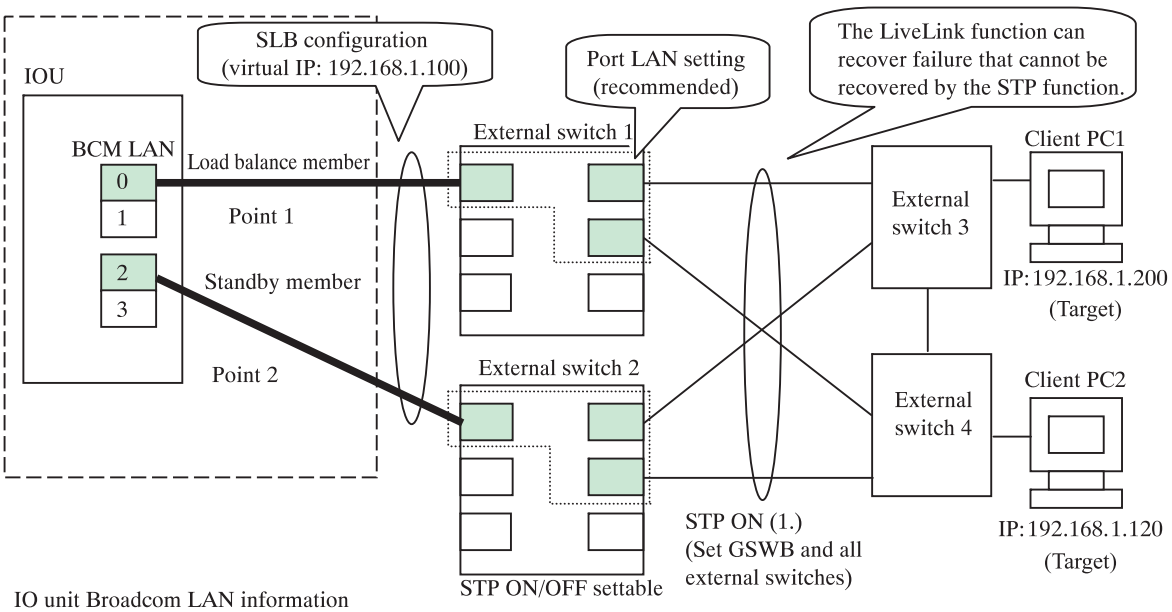

IO unit Broadcom LAN information

LIOU	GbE#	MAC Address	Remarks
	GbE#0	00:0B:5D:70:42:2E	Load balance member
	GbE#1	00:0B:5D:70:42:2F	
	GbE#2	00:0B:5D:70:42:3A	Standby member
	GbE#3	00:0B:5D:70:42:3B	

Note: As a network loop has been generated, set the STP to ON. GSWB and all external switches need to be set.

Figure B.23 Example 2 of Smart Load Balance (SLB + LiveLink) configuration (PRIMEQUEST 520A/520)

- Example 2 of Smart Load Balance (SLB + LiveLink) configuration (PRIMEQUEST 510A)

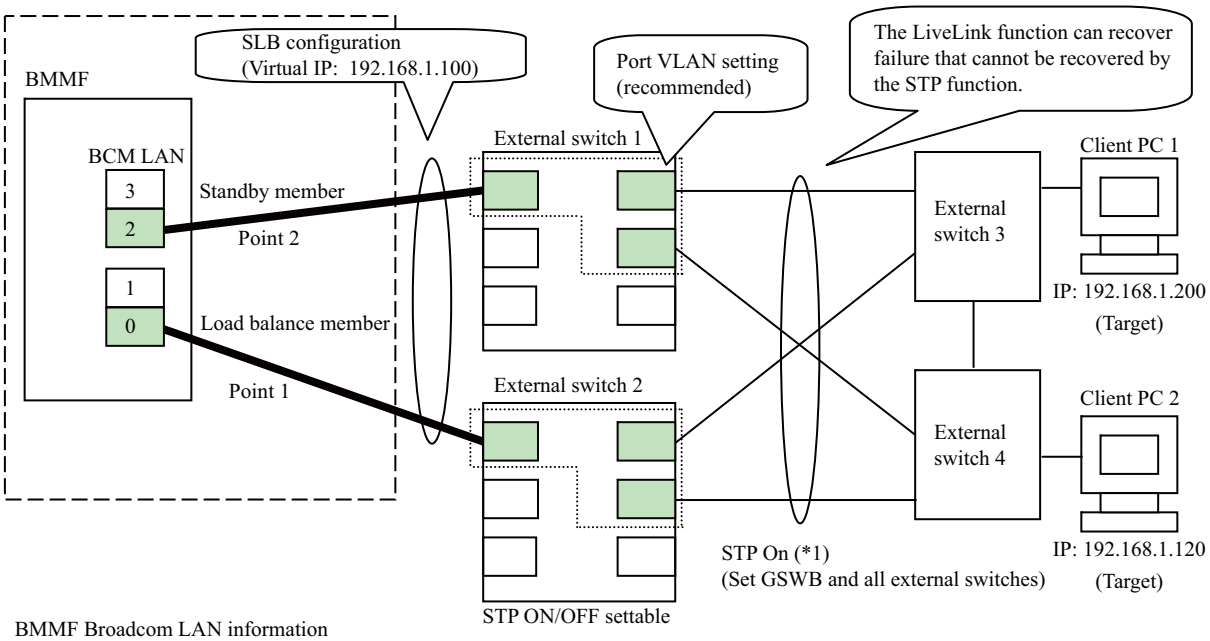

BMMF Broadcom LAN information

LIOU	GbE#	BMC LAN number	MAC Address	Remarks
	GbE#0-0	0	00:0B:5D:70:42:2E	Load balance member
	GbE#0-1	1	00:0B:5D:70:42:2F	
	GbE#1-0	2	00:0B:5D:70:42:3A	Standby member
	GbE#1-1	3	00:0B:5D:70:42:3B	

*1: As a network loop has been generated, set the STP to ON. GSWB and all external switches need to be set.

Figure B.24 Example 2 of Smart Load Balance (SLB + LiveLink) configuration (PRIMEQUEST 510A)

B.2.1 Broadcom LiveLink settings

The conventional SLB (Smart Local Balancing) function can only detect a link error between the Broadcom Ethernet chip and nearest Ethernet device, and perform recovery to the secondary side (by switching traffic). Conversely, the LiveLink function detects link errors over switches and performs traffic switching to a normal route.

(The function periodically checks communications between respective team members and respective targets, and switches to the secondary route if the communication on the primary route fails.)

- Points where errors can be detected and recovered by the SLB function: Point 1 and point 2
- Points where errors can be detected and recovered by the SLB + LiveLink function: Point 1, point 2, point 3, and point 4 (See Figure B.17, "Example 1 of Smart Load Balance (SLB) configuration (PRIMEQUEST 520A/520).")

● Notes on using LiveLink

- LiveLink is only available for Smart Load Balance and Fail Over.
- LiveLink cannot be used on Tag VLAN.
- The target must be on a subnet where a team member exists.
- Up to four targets can be specified.
- The time delay (switching time) between initial path error detection and actual switching is determined based on "Probe interval" and "Maximum retransmission number of probe."
  Switching time = "Probe interval" x "Maximum retransmission number of probe"
- This function does not include the Auto-Fallback Disable function. Therefore, when the primary route is recovered from error status to normal status, traffic is automatically switched from the secondary route to the primary route.
- The time delay during switch back from the secondary route to the primary route following recovery of a path from error status is calculated as follows: "Probe interval" x "Maximum retransmission number of probe."
- If multiple targets are set, the system switches to the secondary route when all link loss is detected between the primary route and the target (for cases where at least 1 link between the secondary route and the target is normal.)

Table B.2 Broadcom LAN information of IO unit

LIOU	GbE#	MAC Address	Remarks	
	GbE#0	00:0B:5D:70:42:2E	192.168.1.10	Load balance member
	GbE#1	00:0B:5D:70:42:2F		
	GbE#2	00:0B:5D:70:42:3A	192.168.1.11	Standby member
	GbE#3	00:0B:5D:70:42:3B		

Remarks: The function periodically checks the normality of paths between the fixed IP: 192.168.1.10 (192.168.1.11) and client PC of IP: 192.168.1.200. If the local path fails, this function switches between the load balance member and standby member on the Broadcom Ethernet chip.

- Example of Generic Trunking (GEC/FEC) configuration (PRIMEQUEST 520A/520)

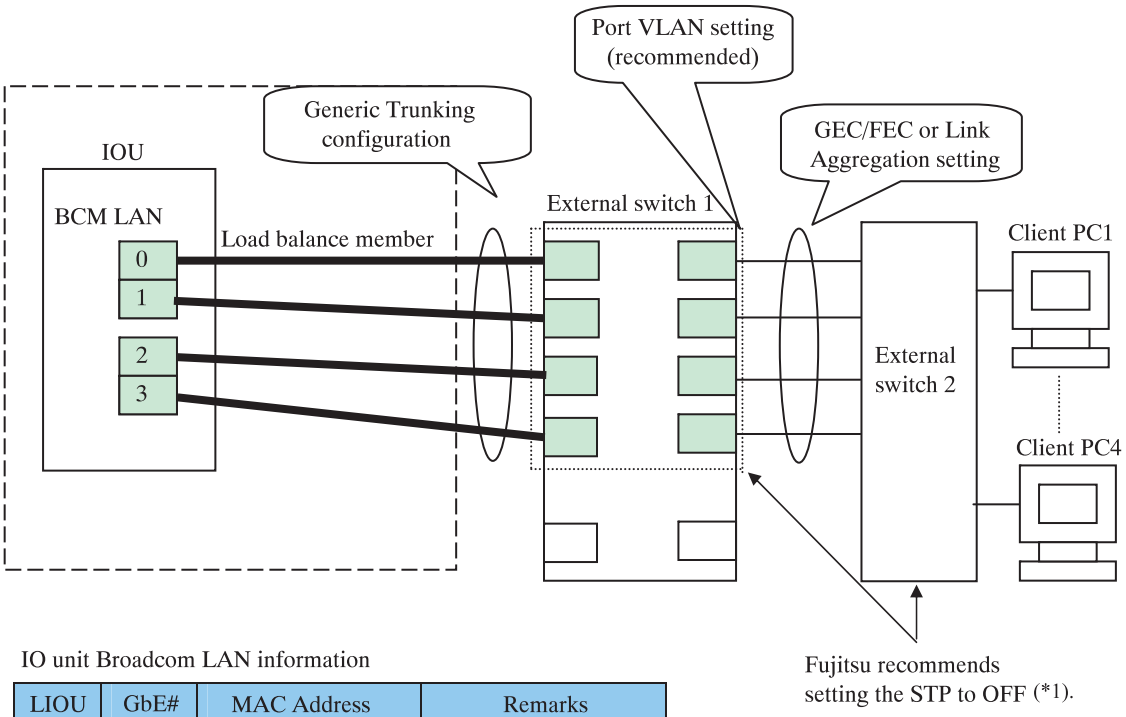

IO unit Broadcom LAN information

LIOU	GbE#	MAC Address	Remarks
	GbE#0	00:0B:5D:70:42:2E	Load balance member
	GbE#1	00:0B:5D:70:42:2F	Load balance member
	GbE#2	00:0B:5D:70:42:3A	Load balance member
	GbE#3	00:0B:5D:70:42:3B	Load balance member

Note: As no network loop has been generated, Fujitsu recommends setting the STP to OFF.

Figure B.25 Example of Generic Trunking (GEC/FEC) configuration (PRIMEQUEST 520A/520)

- Example of Generic Trunking (GEC/FEC) configuration (PRIMEQUEST 510A)

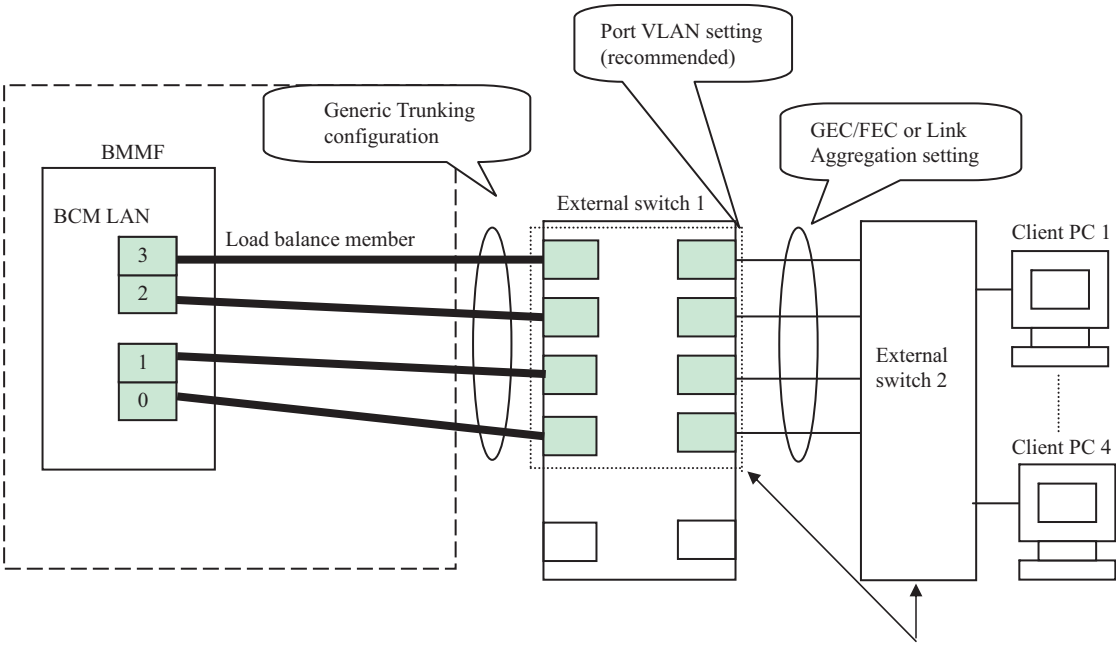

BMMF Broadcom LAN information

LIOU	GbE#	BMC LAN number	MAC Address	Remarks
	GbE#0-0	0	00:0B:5D:70:42:2E	Load balance member
	GbE#0-1	1	00:0B:5D:70:42:2F	Load balance member
	GbE#1-0	2	00:0B:5D:70:42:3A	Load balance member
	GbE#1-1	3	00:0B:5D:70:42:3B	Load balance member

*1: As no network loop has been generated, Fujitsu recommends setting the STP to OFF.

Figure B.26 Example of Generic Trunking (GEC/FEC) configuration (PRIMEQUEST 510A)

- Example of Link Aggregation (802.3ad) configuration (PRIMEQUEST 520A/520)

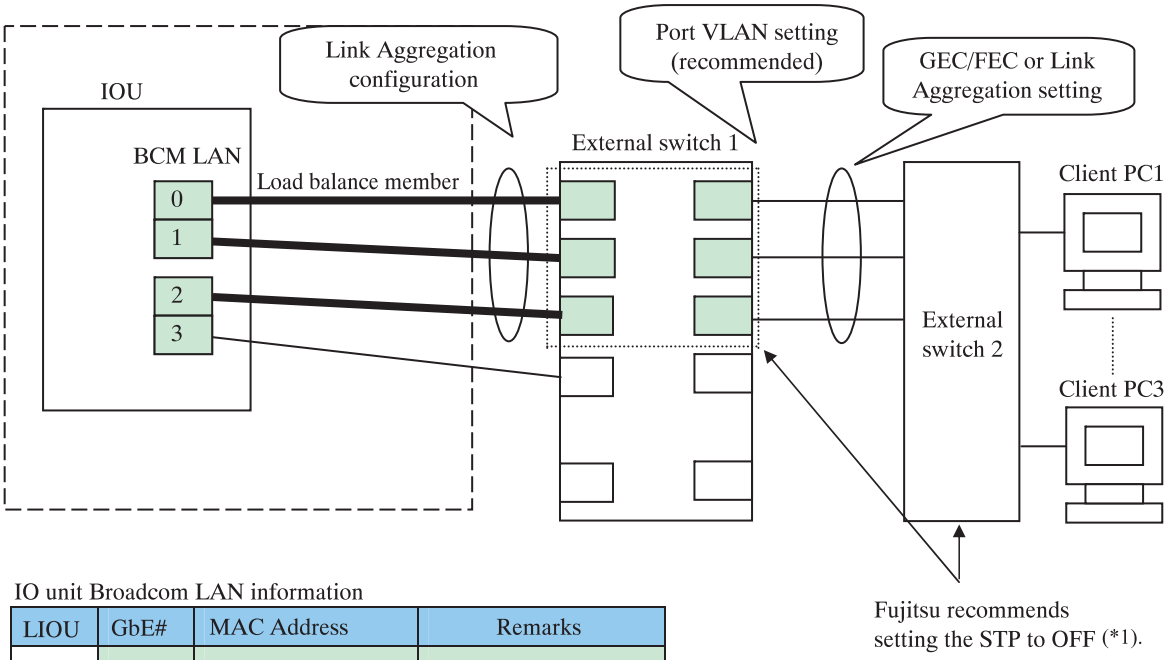

IO unit Broadcom LAN information

LIOU	GbE#	MAC Address	Remarks
	GbE#0	00:0B:5D:70:42:2E	Load balance member
	GbE#1	00:0B:5D:70:42:2F	Load balance member
	GbE#2	00:0B:5D:70:42:3A	Load balance member
	GbE#3	00:0B:5D:70:42:3B	

Note: As no network loop has been generated, Fujitsu recommends setting the STP to OFF.

Figure B.27 Example of Link Aggregation (802.3ad) configuration (PRIMEQUEST 520A/520)

- Example of Link Aggregation (802.3ad) configuration (PRIMEQUEST 510A)

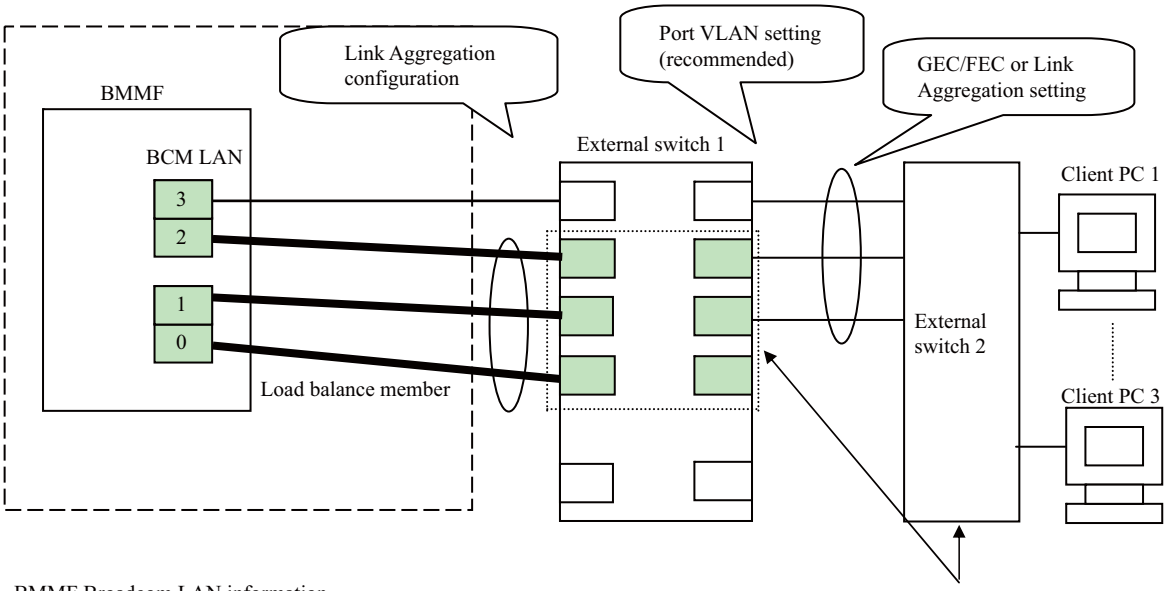

BMMF Broadcom LAN information

LIOU	GbE#	BMC LAN number	MAC Address	Remarks
	GbE#0-0	0	00:0B:5D:70:42:2E	Load balance member
	GbE#0-1	1	00:0B:5D:70:42:2F	Load balance member
	GbE#1-0	2	00:0B:5D:70:42:3A	Load balance member
	GbE#1-1	3	00:0B:5D:70:42:3B	

*1: As no network loop has been generated, Fujitsu recommends setting the STP to OFF.

Figure B.28 Example of Link Aggregation (802.3ad) configuration (PRIMEQUEST 510A)

B.3 Smart Load Balance Setting Procedure

This section explains the procedure for setting Smart Load Balance.

1 To set Smart Load Balance, start [Broadcom Advanced Control Suite 3] from the [Start] menu.

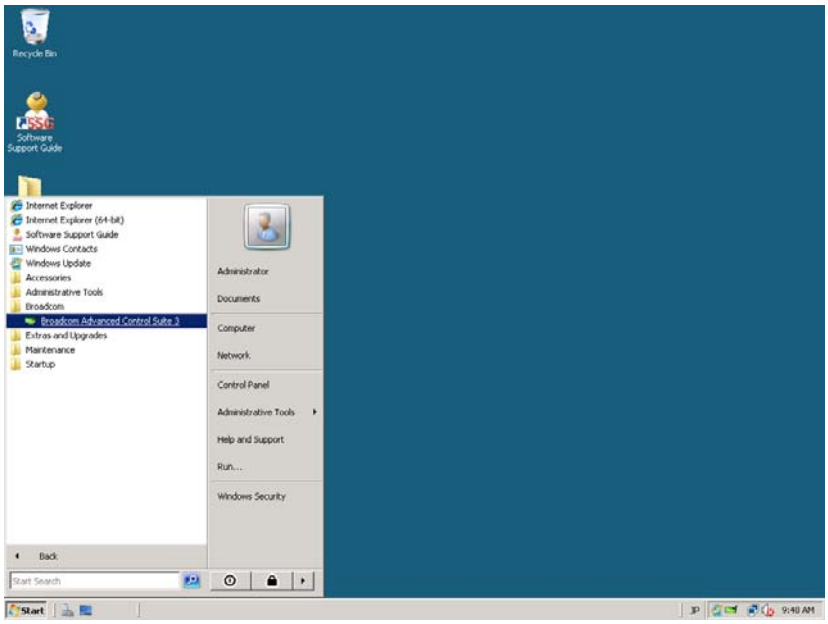

Figure B.29 Starting Broadcom Advanced Control Suite 3

2 From the menu bar, select [Teams] - [Create a Team].

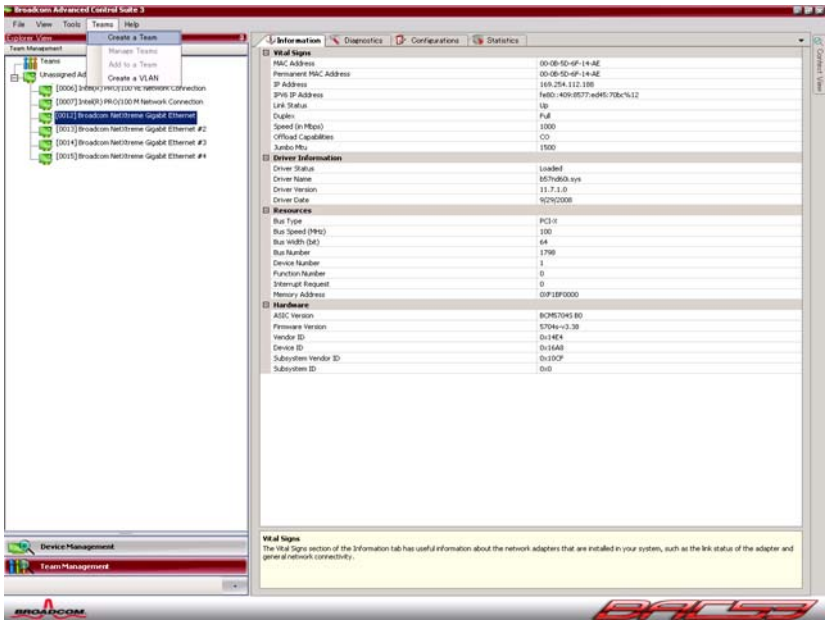

Figure B.30 [Broadcom Advanced Control Suite 3] window

3 When the following wizard appears, click [Next].

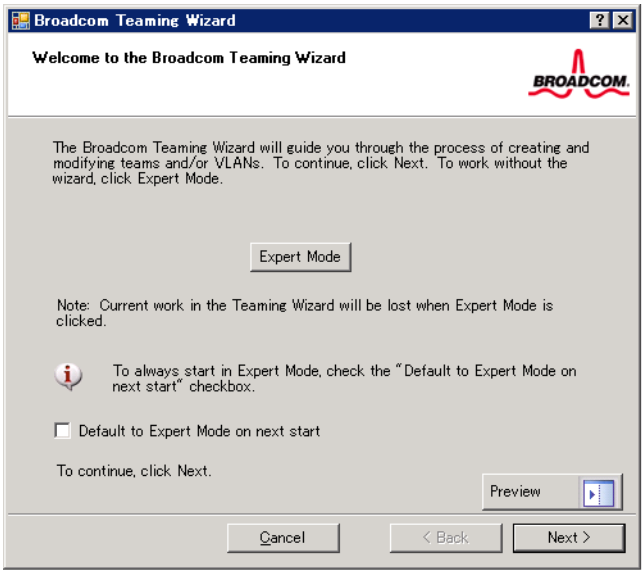

Figure B.31 [Broadcom Teaming Wizard] dialog box

4 Enter a team identification name and then click [Next].

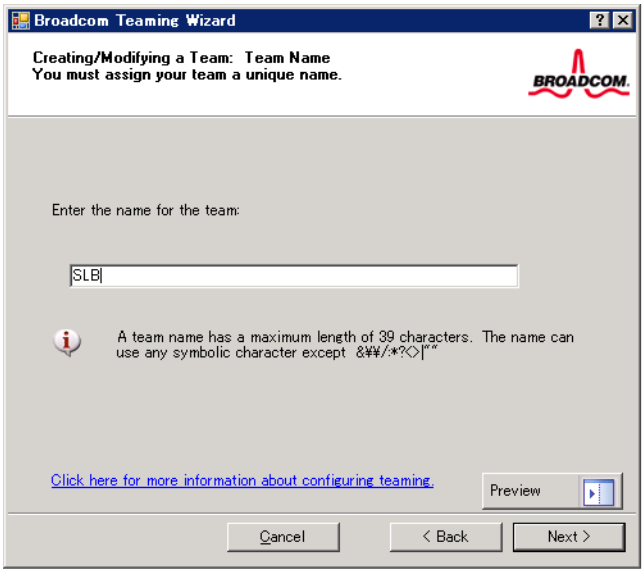

Figure B.32 Team naming dialog box

5 Select "Smart Load Balancing (TM) and Failover (SLB)" and then click [Next].

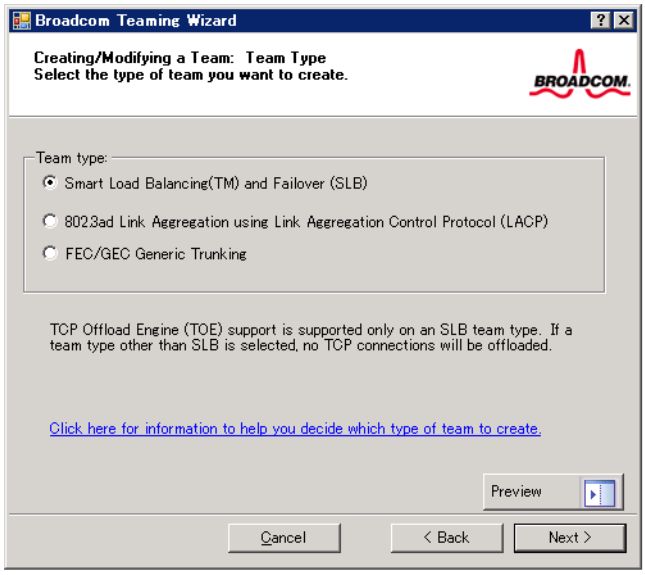

Figure B.33 Team creation dialog box

6 Select the target load balance member from the "Available Adapters" list, click [Add], and then click [Next].

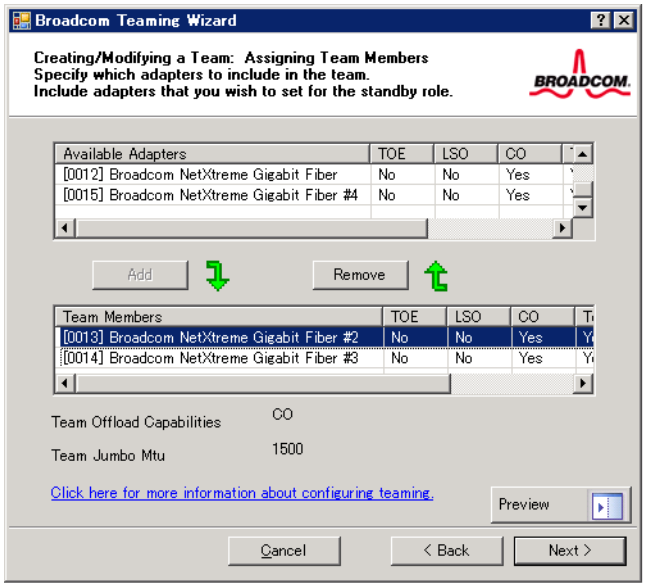

Figure B.34 Team creation dialog box

7 Select "Use the following member as a standby member, "select a standby member adapter, and then click [Next]. (To use Auto-Fallback Disable mode, select "Enable Auto-Fallback Disable mode.")

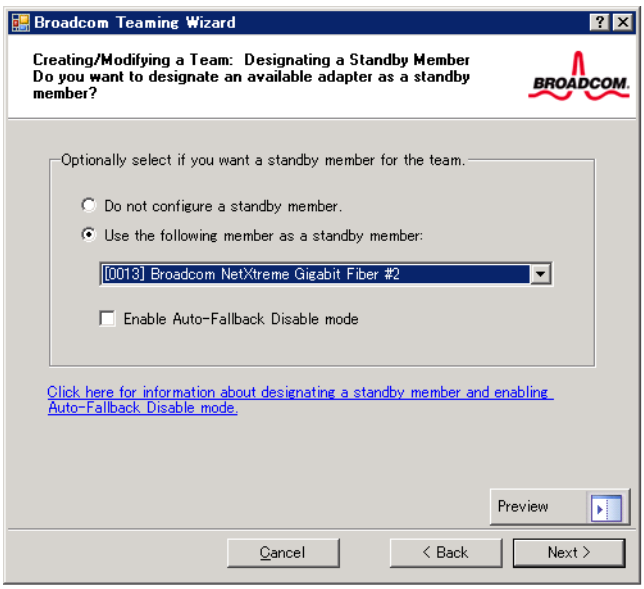

Figure B.35 Team creation dialog box

8 In response to "Configure LiveLink?," select "No" and then click [Next].

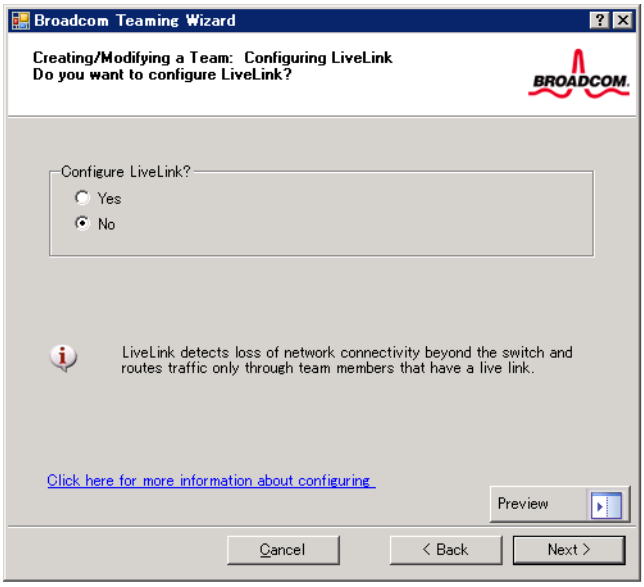

Figure B.36 Team creation dialog box

9 Select "Skip manage VLAN" under "Manage VLAN," and then click [Next].

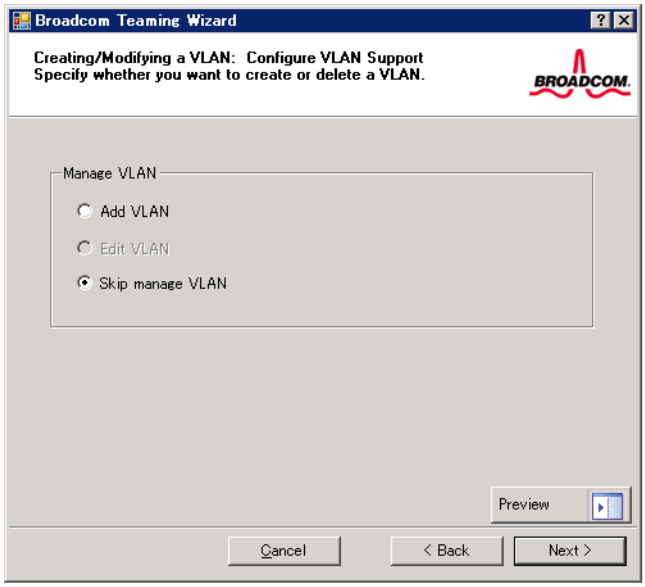

Figure B.37 Team creation dialog box

10 Select "Commit changes to system and Exit the wizard" under "Commit changes" and then click [Finish].

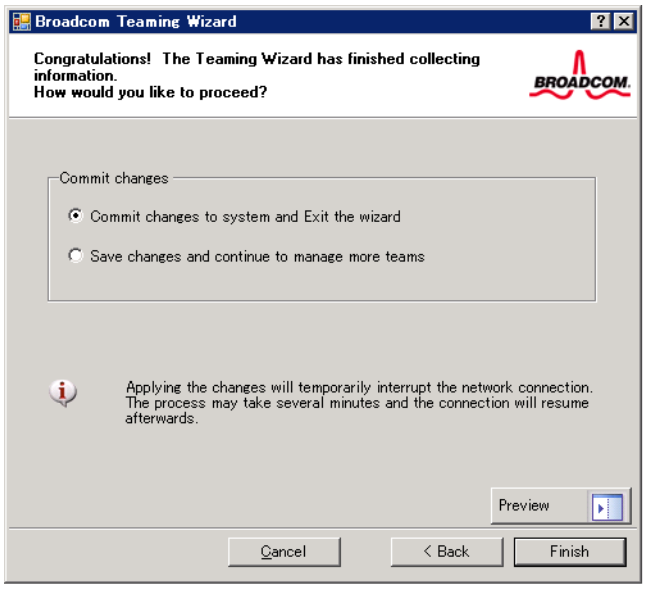

Figure B.38 Team creation dialog box

11 Click [Yes] in response to the following message.

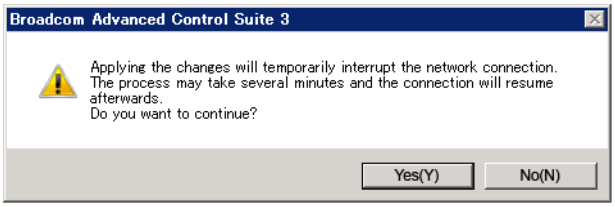

Figure B.39 Message dialog box

12 When a team is created, a virtual adapter is also created in [Broadcom Advanced Control Suite 3].

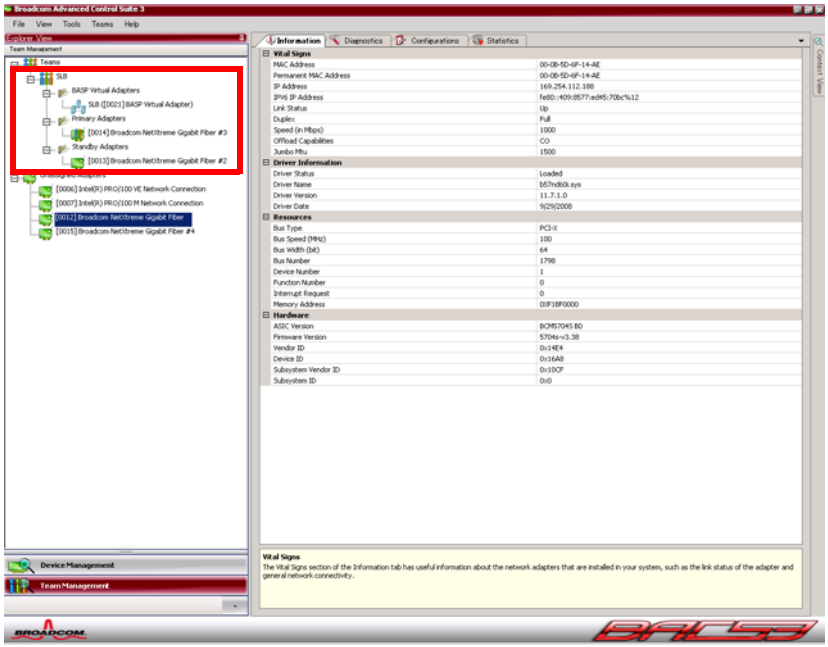

Figure B.40 [Broadcom Advanced Control Suite 3] window

13 Set an IP address for the created virtual adapter on [Network Connections] of Windows. (Device name "BASP Virtual Adapter" is assigned to the adapter.)

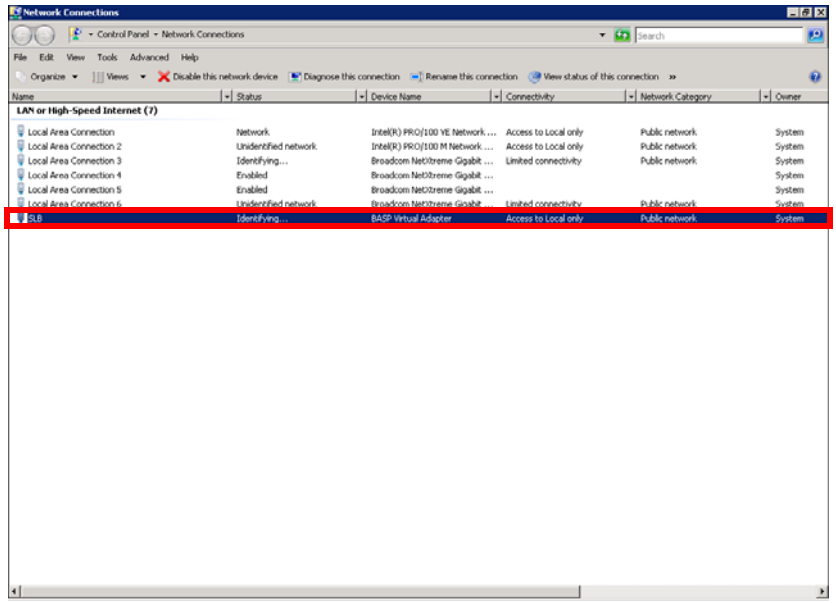

Figure B.41 [Network Connections] window

B.4 Smart Load Balance LiveLink Setting Procedure

This section explains the procedure for setting Smart Load Balance LiveLink.

1 To set Smart Load Balance LiveLink, start [Broadcom Advanced Control Suite 3] from the [Start] menu.

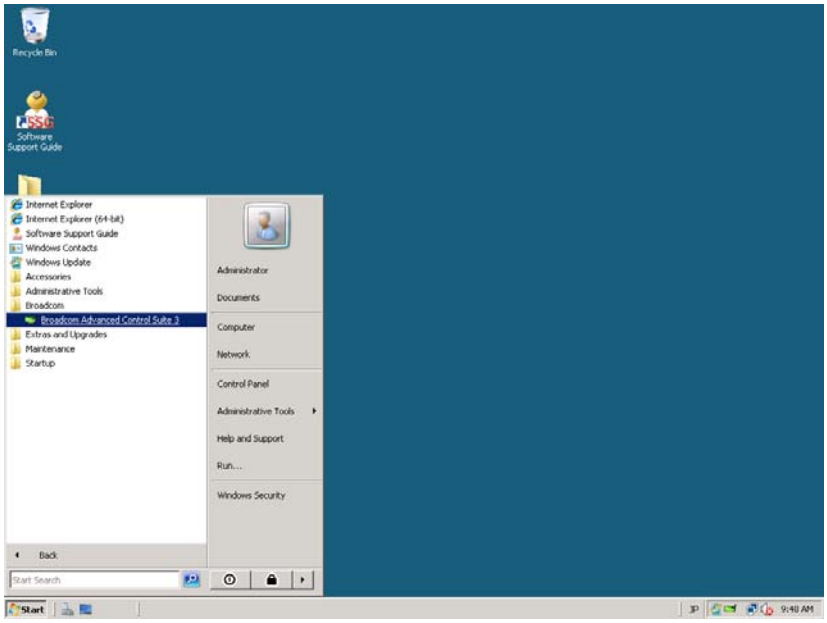

Figure B.42 Starting Broadcom Advanced Control Suite 3

2 From the menu bar, select [Teams] - [Create a Team].

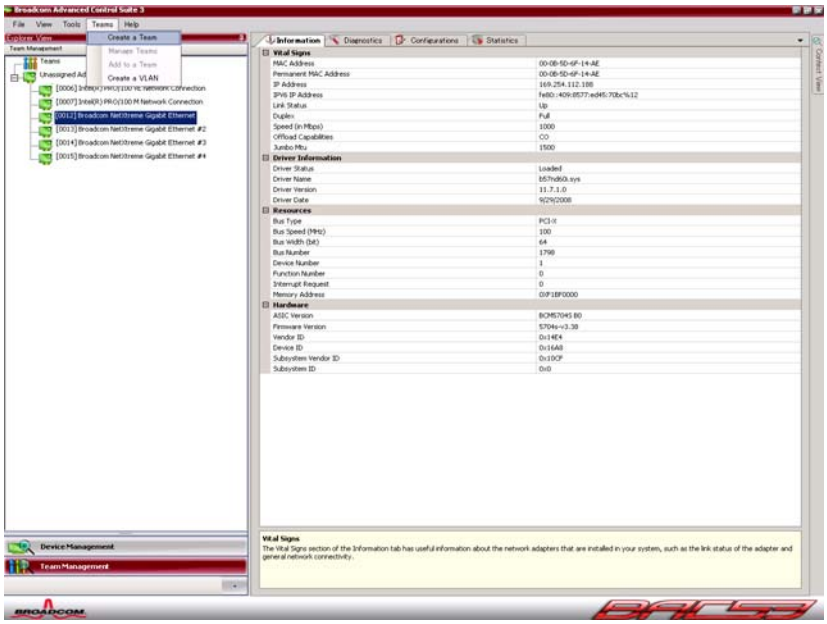

Figure B.43 [Broadcom Advanced Control Suite 3] window

3 When the following wizard appears, click [Next].

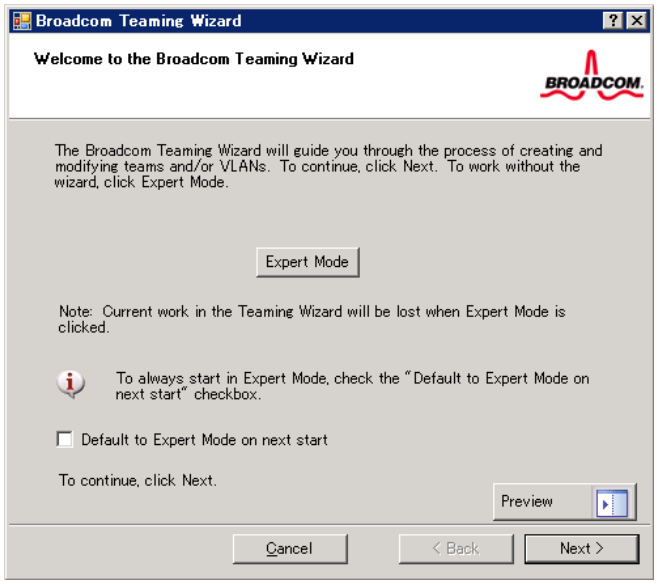

Figure B.44 [Broadcom Teaming Wizard] dialog box

4 Enter a team identification name and then click [Next]. (Any team name can be specified.)

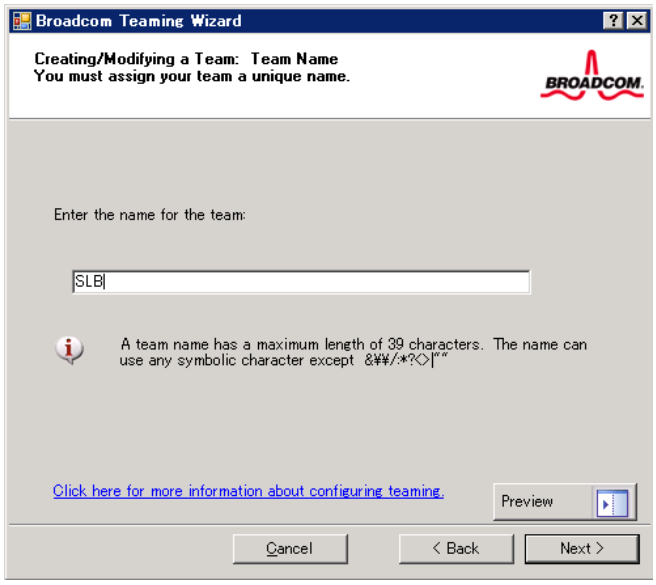

Figure B.45 Team naming dialog box

5 Select "Smart Load Balancing (TM) and Failover (SLB)" and then click [Next].

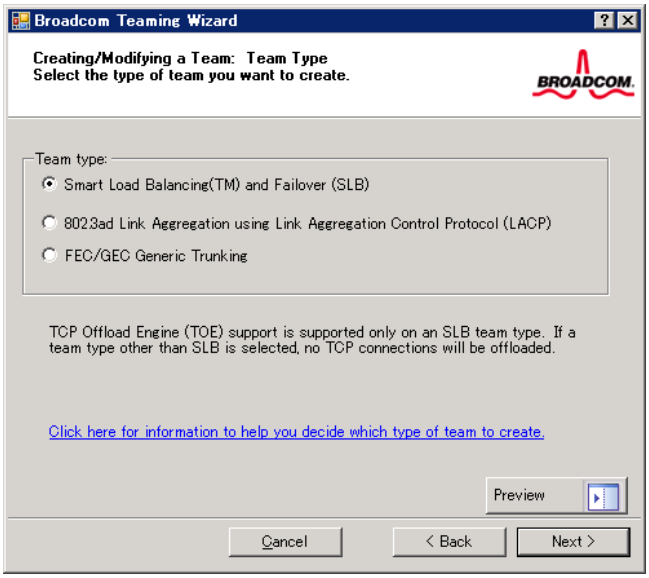

Figure B.46 Team creation dialog box

6 Select a load balance member from the "Available Adapters" list, click [Add], and then click [Next].

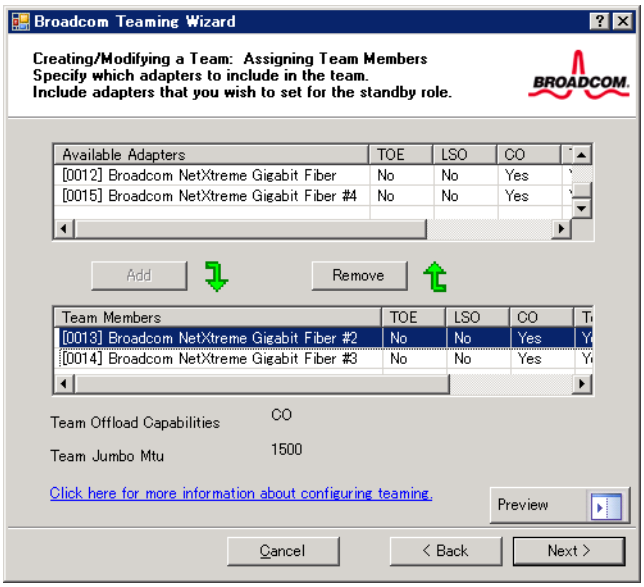

Figure B.47 Team creation dialog box

7 Select "Use the following member as a standby member, "select a standby member adapter, and then click [Next]. (To use Auto-Fallback Disable mode, select "Enable Auto-Fallback Disable mode.")

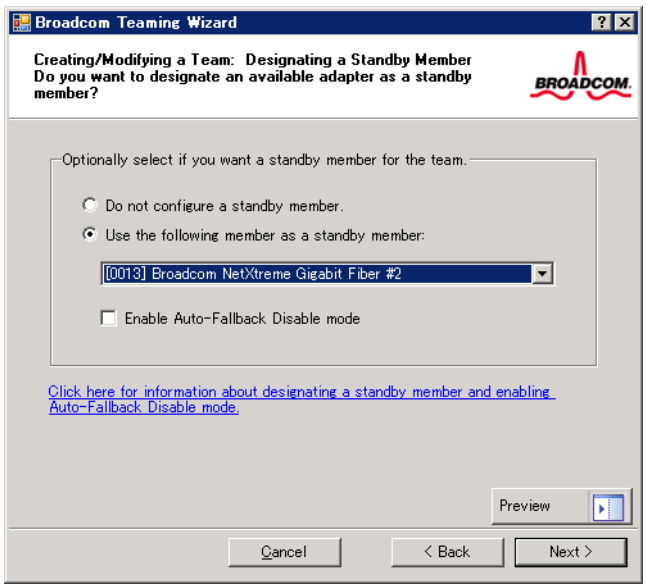

Figure B.48 Team creation dialog box

8 In response to "Configure LiveLink?," select "Yes" and then click [Next].

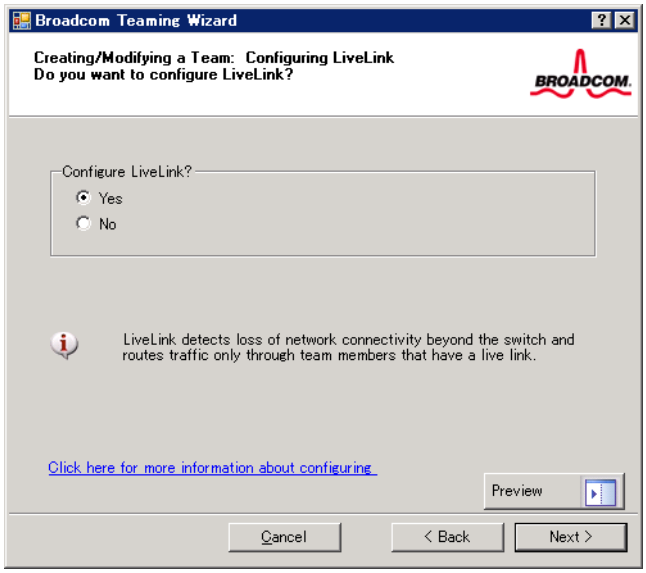

Figure B.49 Team creation dialog box

9 Set an IP address for the probe whose link errors you want to detect.
Click [Edit Target IP address]. (Up to four probes)

- Monitoring links between Target = 10.0.0.200 and member = 10.0.0.121
  Monitoring links between Target = 10.0.0.200 and member = 10.0.0.122
- Switching time = Probe interval (2) x Maximum retransmission number of probe (5) = 10 seconds (12 seconds maximum)

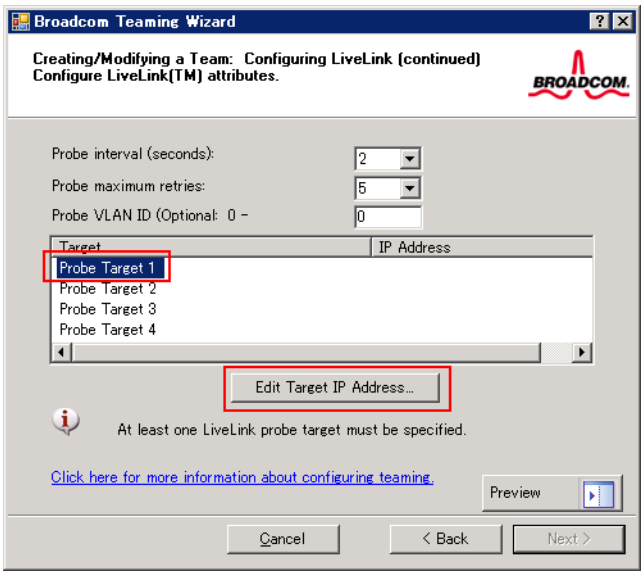

Figure B.50 LiveLink configuration dialog box

10 Set the IP address of the probe whose link errors you want to detect, and then click [OK].

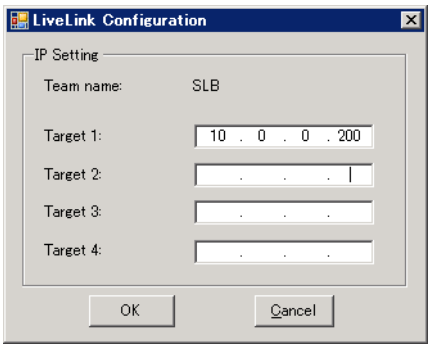

Figure B.51 [LiveLink Configuration] dialog box

11 After the setting is complete, click [Next].

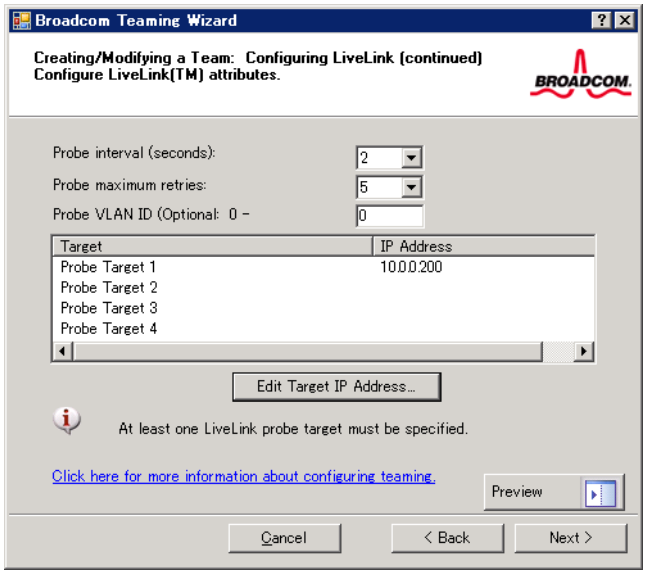

Figure B.52 LiveLink configuration dialog box

12 Set the IP addresses of team members.
To do so, click [Edit Member IP Address].
(The path between the target probe and the selected member is monitored.)

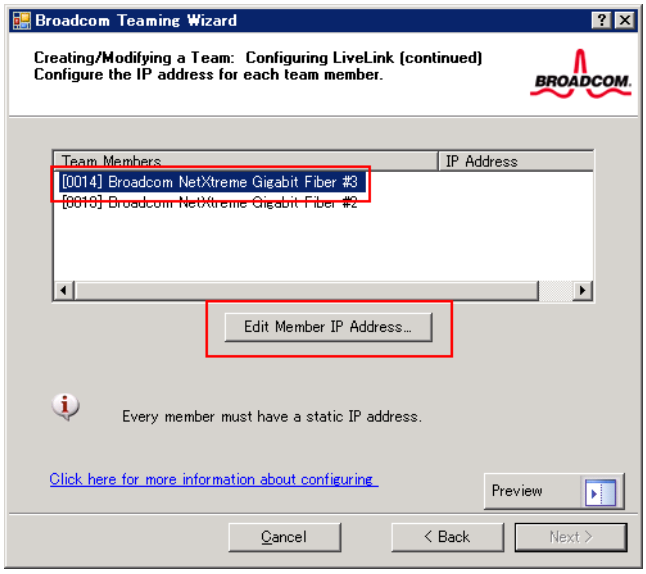

Figure B.53 LiveLink configuration dialog box

13 Set the IP addresses of all team members, and then click [OK].

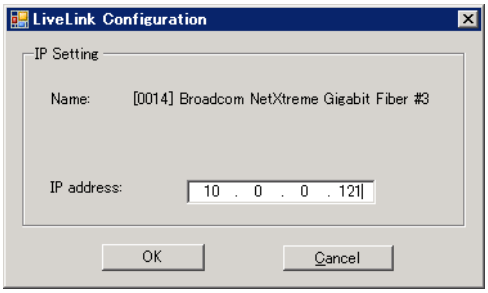

Figure B.54 [LiveLink Configuration] dialog box

14 After the setting is complete, the dialog box is displayed as shown below. Click [Next].

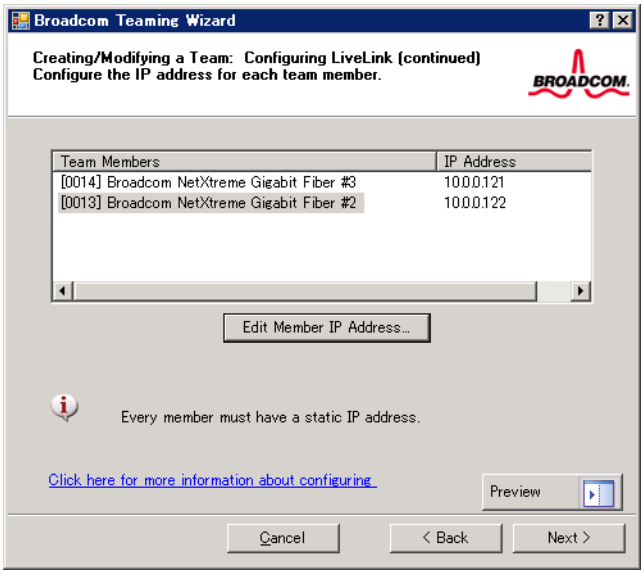

Figure B.55 LiveLink configuration dialog box

15 Select "Skip manage VLAN" under "Manage VLAN" and then click [Next].

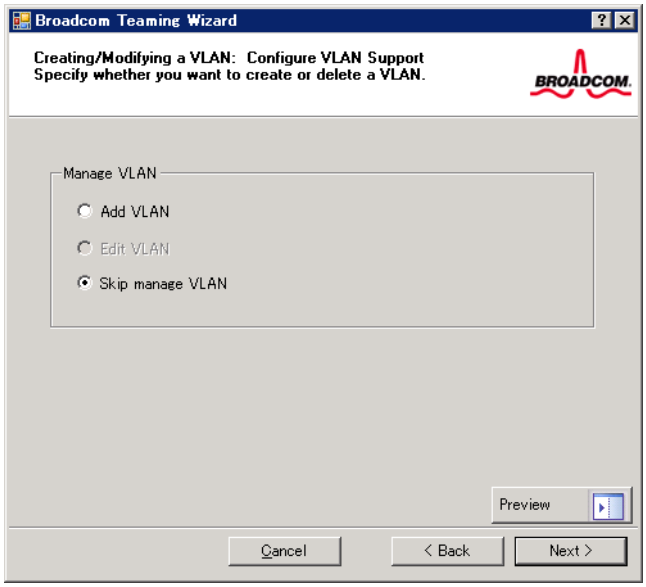

Figure B.56 Team creation dialog box

16 Select "Commit changes to system and Exit the wizard" under "Commit changes" and then click [Finish].

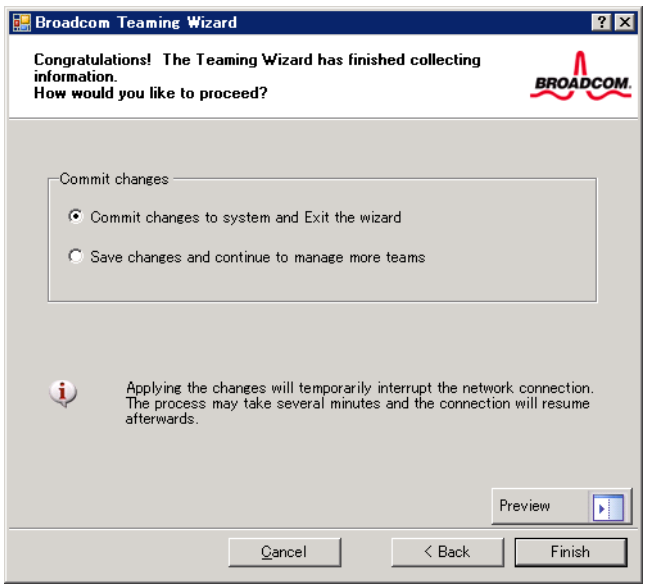

Figure B.57 Team creation dialog box

17 When the following message appears, click [Yes].

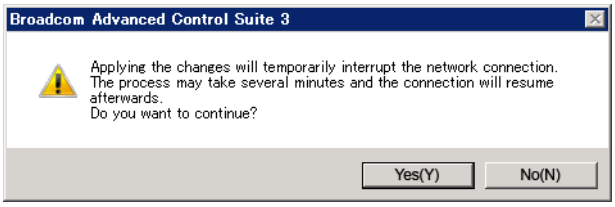

Figure B.58 Message dialog box

18 When a team is created, a virtual adapter is also created in [Broadcom Advanced Control Suite 3].

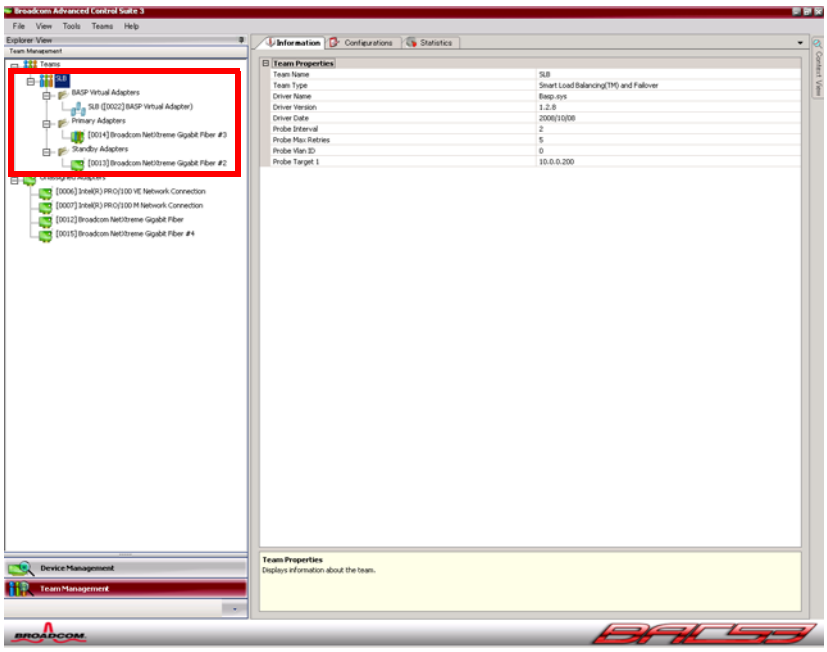

Figure B.59 [Broadcom Advanced Control Suite 3] window

19 After the LiveLink setting is complete, BACS is displayed as shown below.

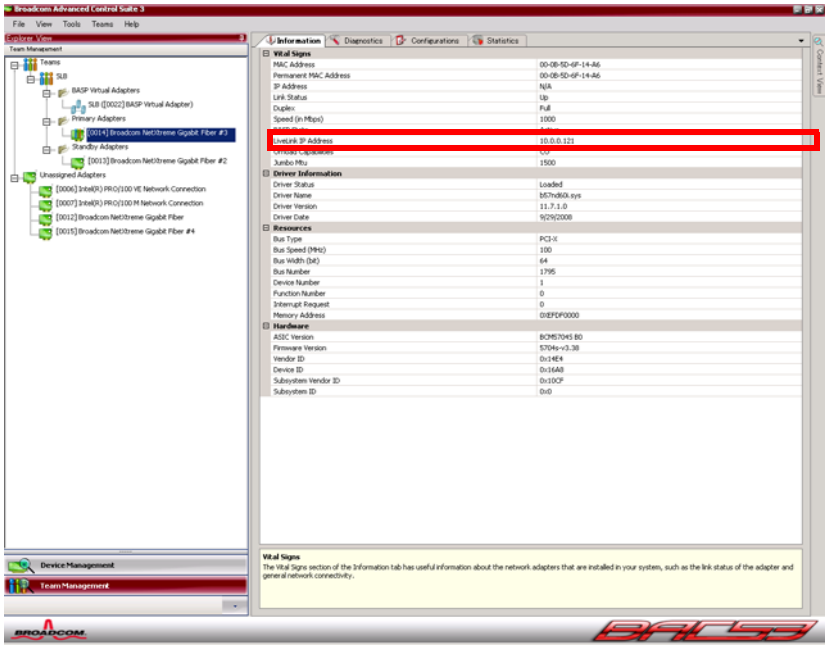

Figure B.60 [Broadcom Advanced Control Suite 3] window

20 Set an IP address for the created virtual adapter on [Network Connections] of Windows. (Device name "BASP Virtual Adapter" is assigned to the adapter.)

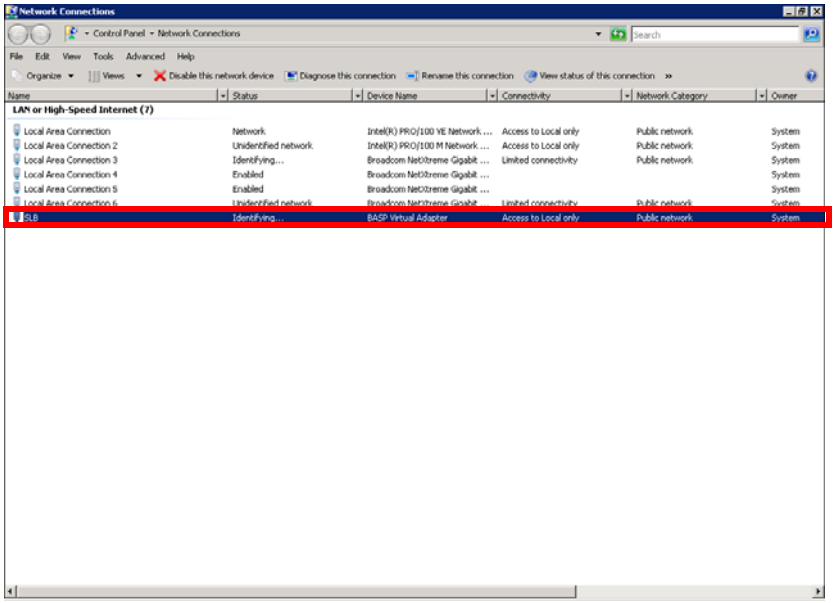

Figure B.61 [Network Connections] window

B.5 Generic Trunking (FEC/GEC) Setting Procedure

This section explains the procedure for setting generic trunking (FEC/GEC).

Generic trunking indicates Generic Trunking (FEC/GEC)/802.3ad-Draft Static.

1 From the [Start] menu, choose "Broadcom Advanced Control Suite 3."

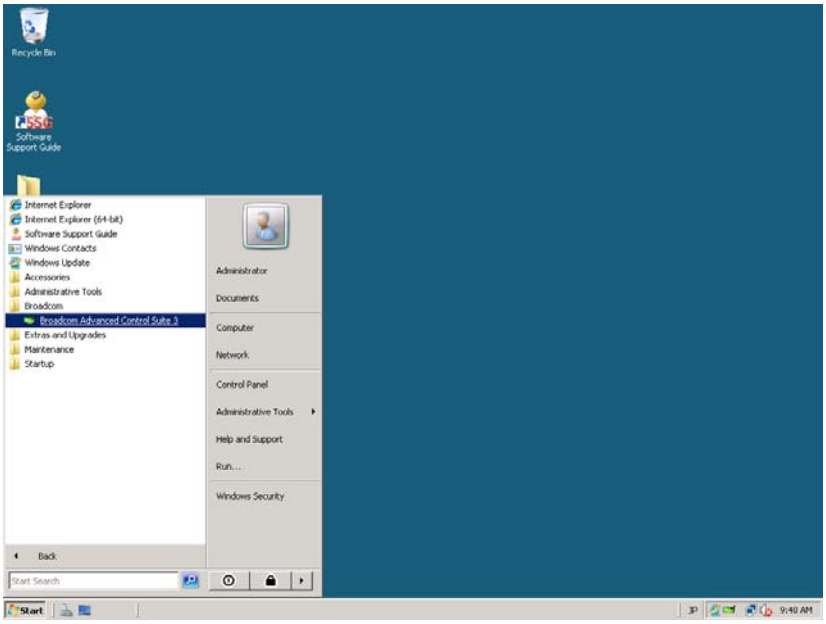

Figure B.62 Starting Broadcom Advanced Control Suite 3

2 Select [Teams] - [Create a Team].

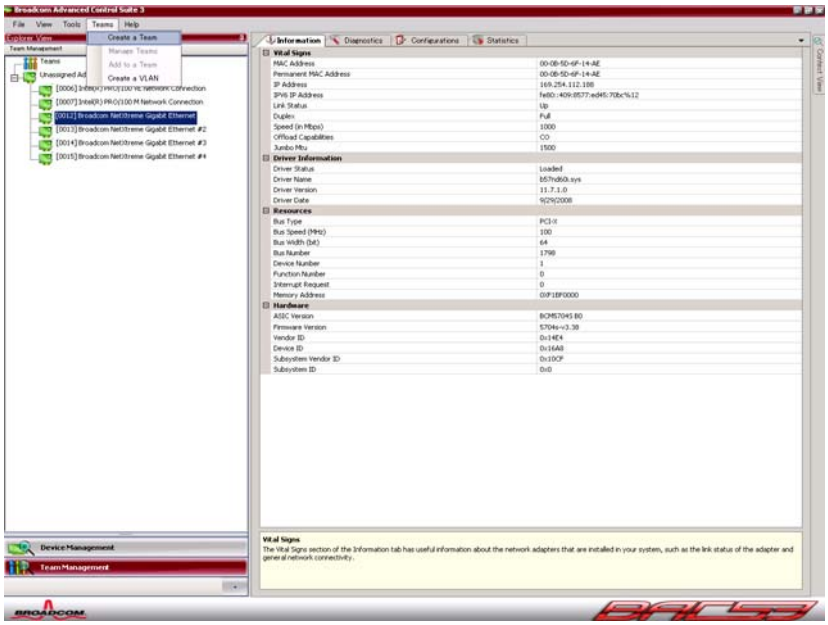

Figure B.63 [Broadcom Advanced Control Suite 3] window

3 When the following wizard appears, click [Next].

Figure B.64 [Broadcom Teaming Wizard] dialog box

4 Enter a team identification name and then click [Next]. (Any team name can be specified.)

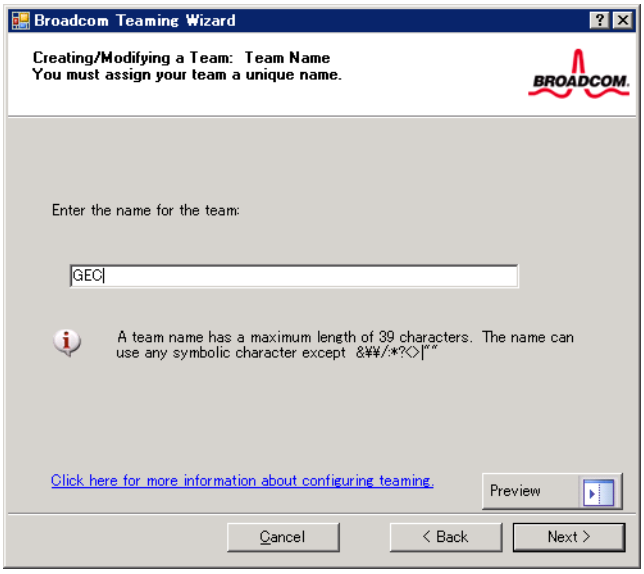

Figure B.65 Team naming dialog box

5 Select "FEC/GEC Generic Trunking" and then click [Next].

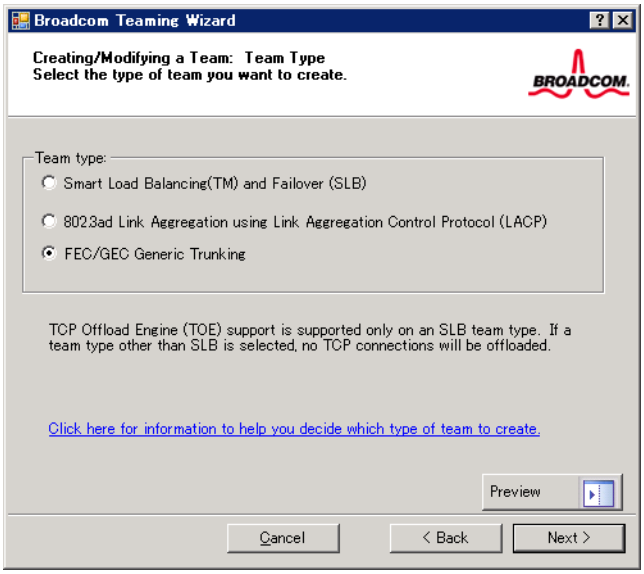

Figure B.66 Team creation dialog box

6 In response to the following message, click [OK].

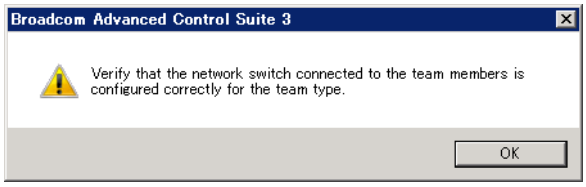

Figure B.67 Message dialog box

7 Select a load balance member from the "Available Adapters" list, click [Add], and then click [Next]. (You cannot set the load balance member as a standby member.)

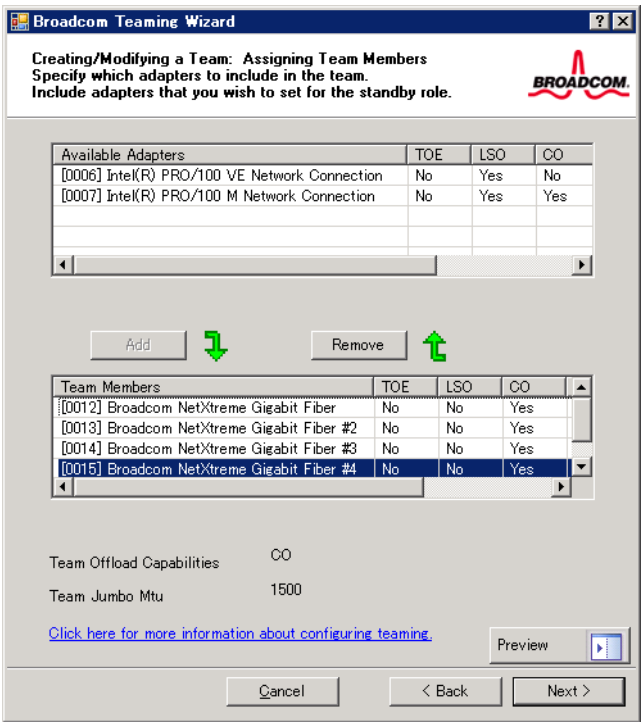

Figure B.68 Team creation dialog box

8 Select "Skip manage VLAN" under "Manage VLAN" and then click [Next].

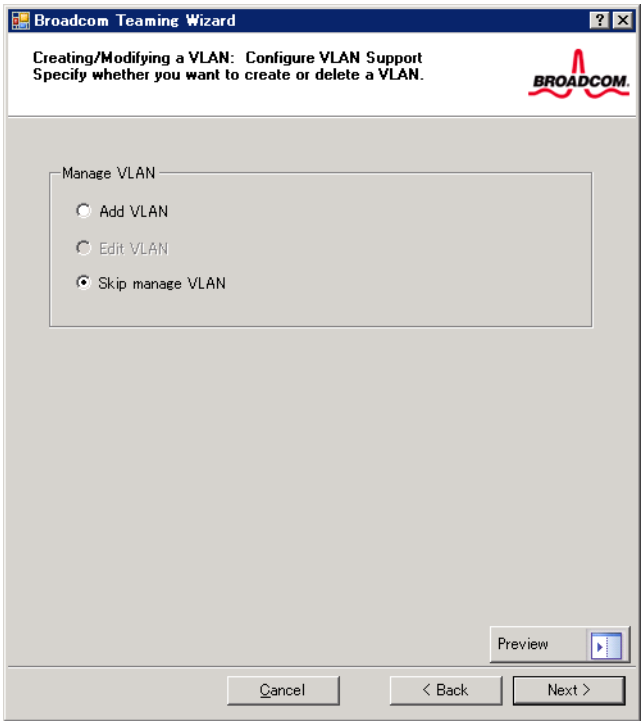

Figure B.69 Team creation dialog box

9 Select "Commit changes to system and Exit the wizard" under "Commit changes" and then click "Finish."

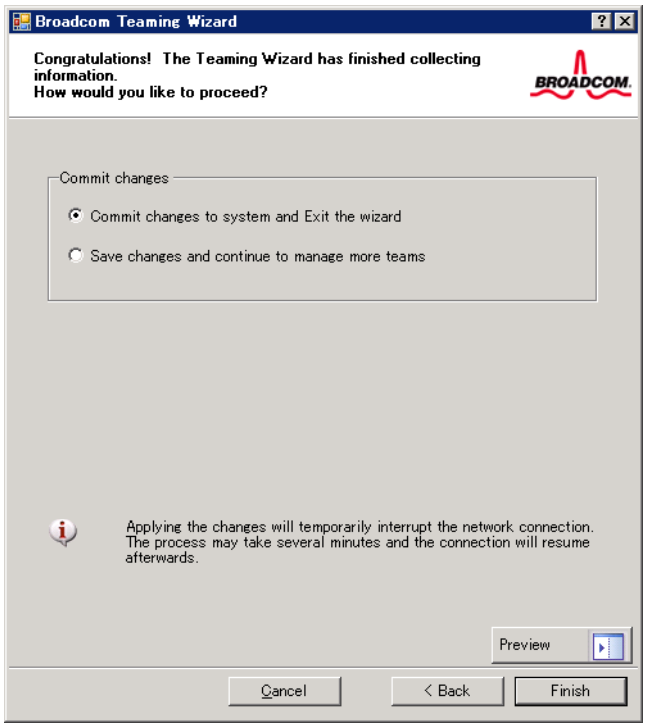

Figure B.70 Team creation dialog box

10 In response to the following message, click [Yes].

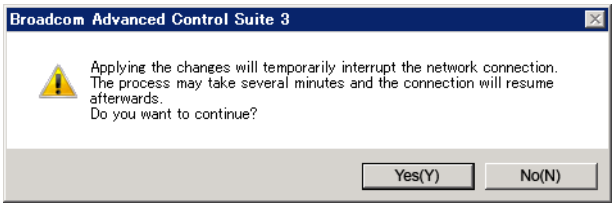

Figure B.71 Message dialog box

11 When the team is created, a virtual adapter is also created in [Broadcom Advanced Control Suite 3].

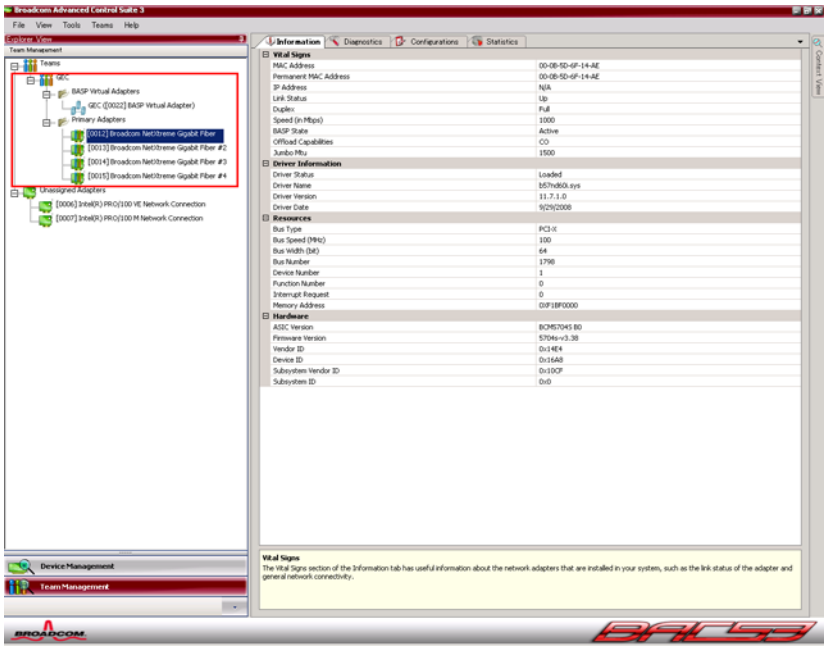

Figure B.72 [Broadcom Advanced Control Suite 3] window

12 Set an IP address for the created virtual adapter on [Network Connections] of Windows. (Device name "BASP Virtual Adapter" is assigned to the adapter.)

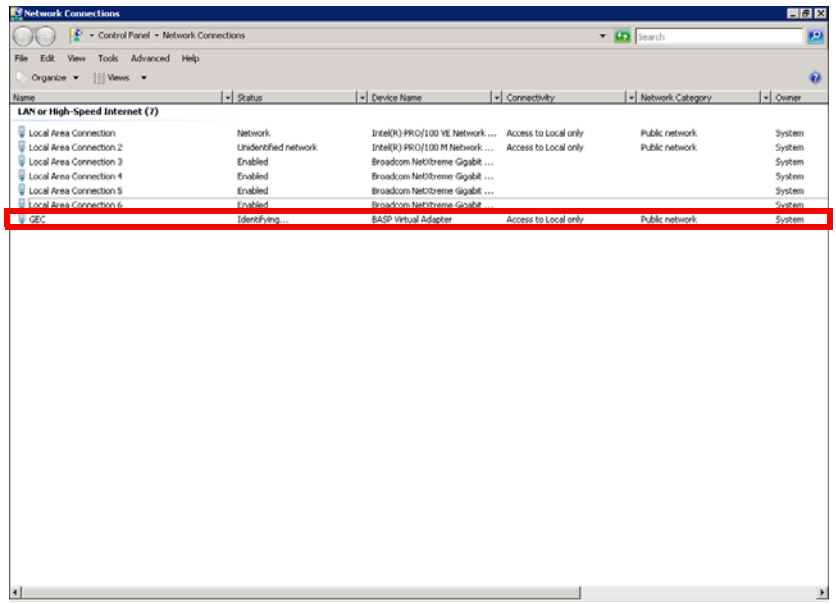

Figure B.73 [Network Connections] window

B.6 Link Aggregation (802.3ad) Setting Procedure

This section explains the procedure for setting Link Aggregation (802.3ad).

1 From the [Start] menu, choose "Broadcom Advanced Control Suite 3."

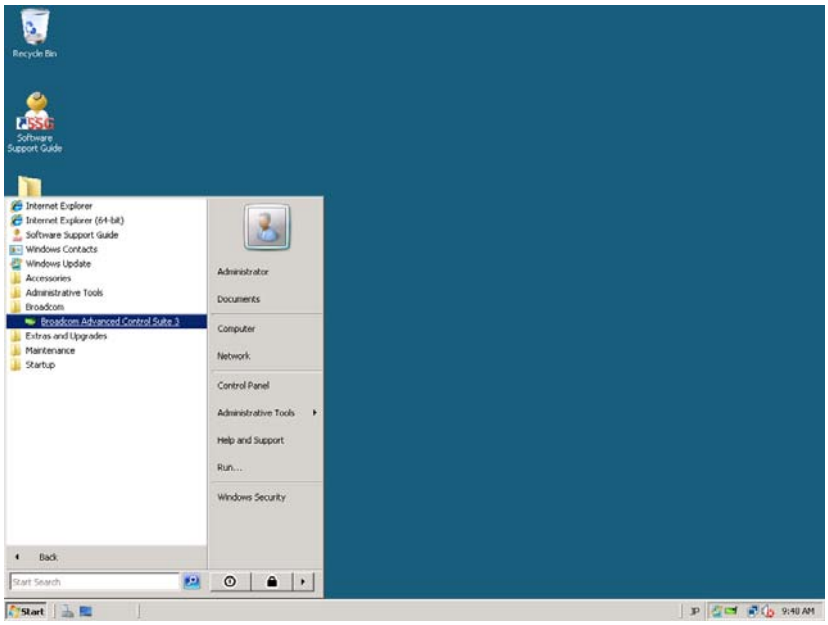

Figure B.74 Starting Broadcom Advanced Control Suite 3

2 Select [Teams] - [Create a Team].

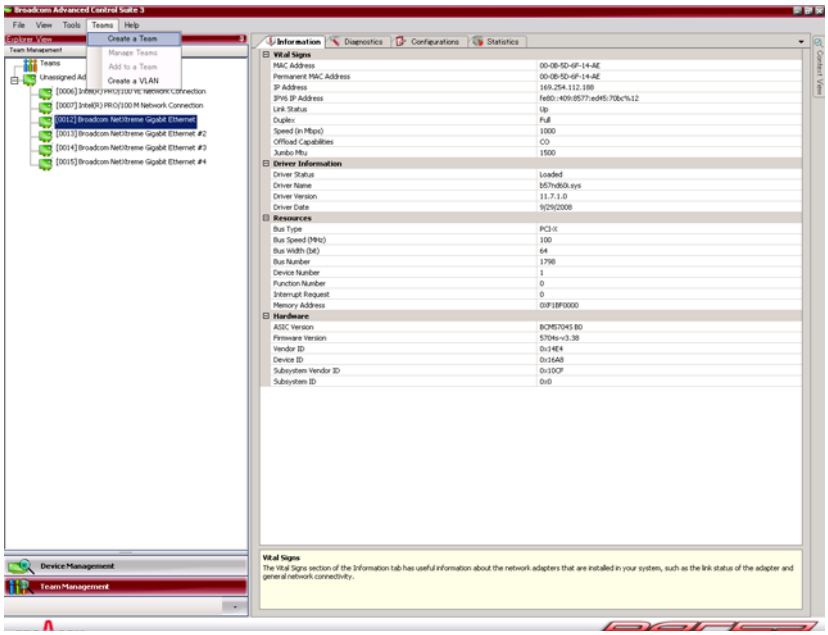

Figure B.75 [Broadcom Advanced Control Suite 3] window

3 When the following wizard appears, click [Next].

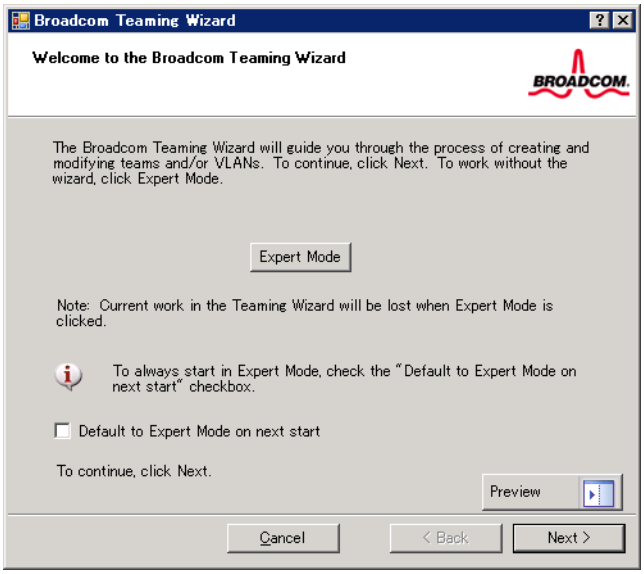

Figure B.76 [Broadcom Teaming Wizard] dialog box

4 Enter a team identification name and then click [Next]. (Any team name can be specified.)

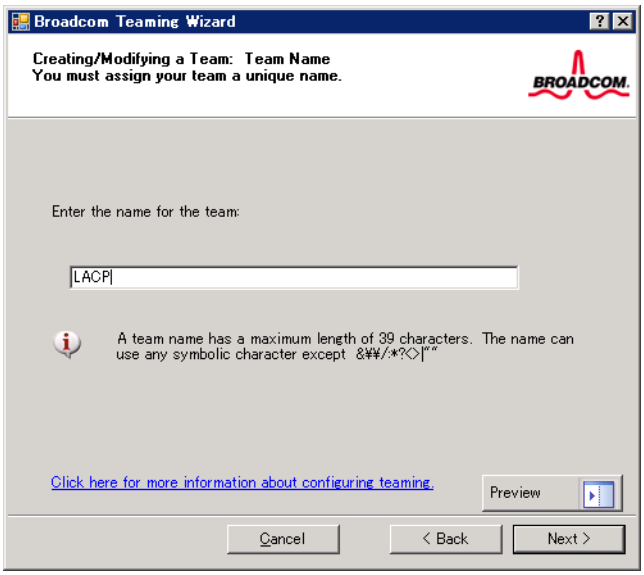

Figure B.77 [Team naming dialog box

5 Select "802.3ad Link Aggregation using Link Aggregation Control Protocol (LACP)" and then click [Next].

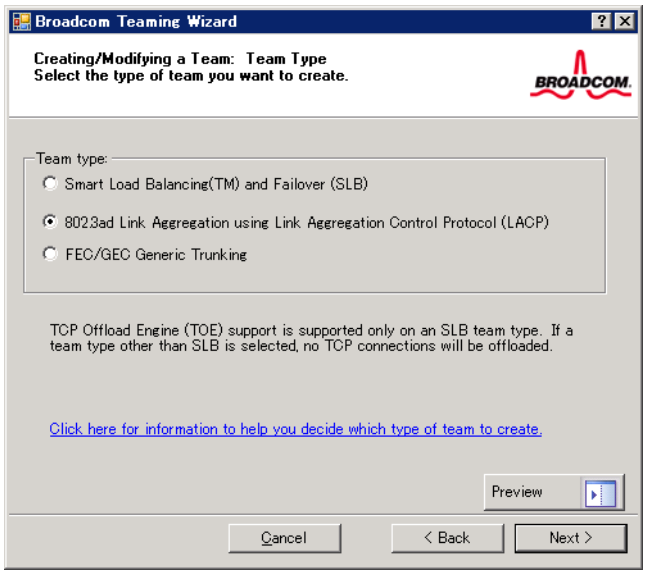

Figure B.78 Team creation dialog box

6 In response to the following message, click [OK].

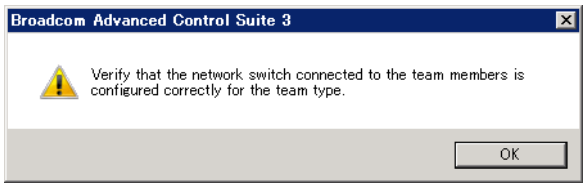

Figure B.79 Message dialog box

7 Select a load balance member from the "Available Adapters" list, click [Add], and then click [Next]. (You cannot set the load balance member as a standby member.)

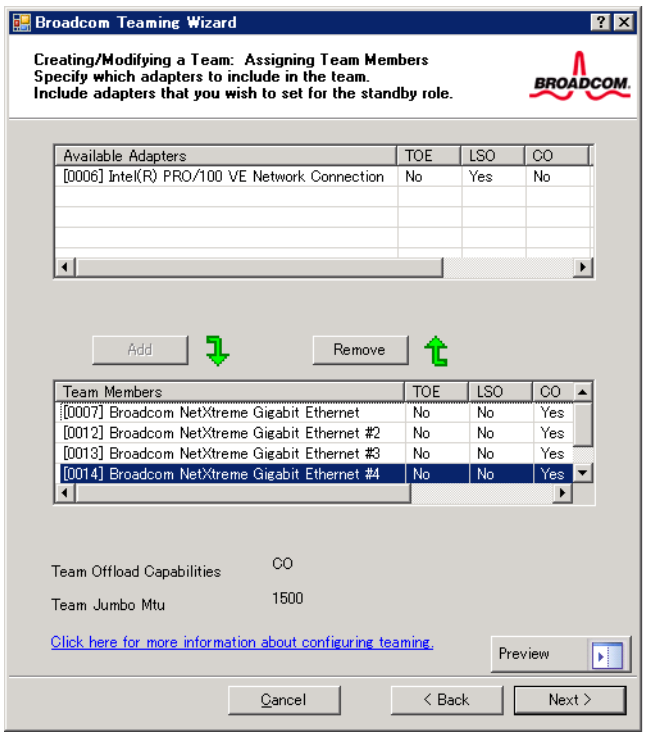

Figure B.80 Team creation dialog box

8 Select "Skip manage VLAN" under "Manage VLAN" and then click [Next].

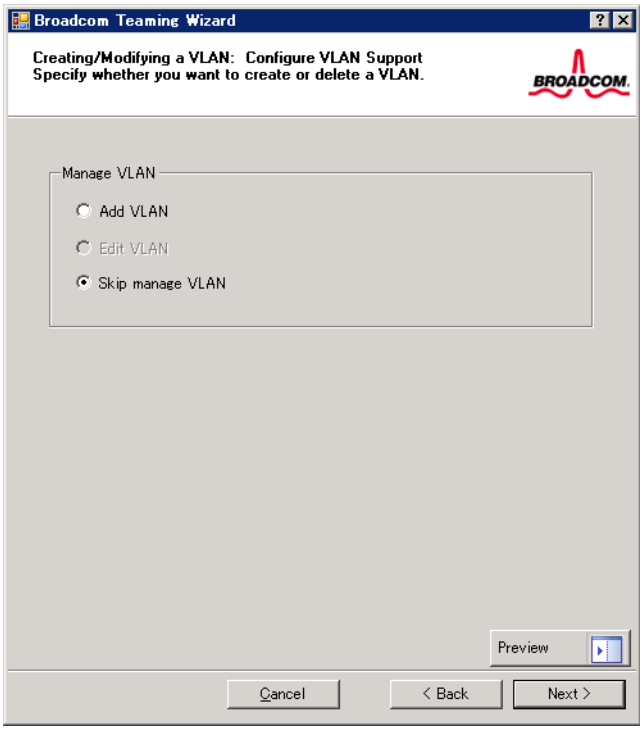

Figure B.81 Team creation dialog box

9 Select "Commit changes to system and Exit the wizard" under "Commit changes" and then click "Finish."

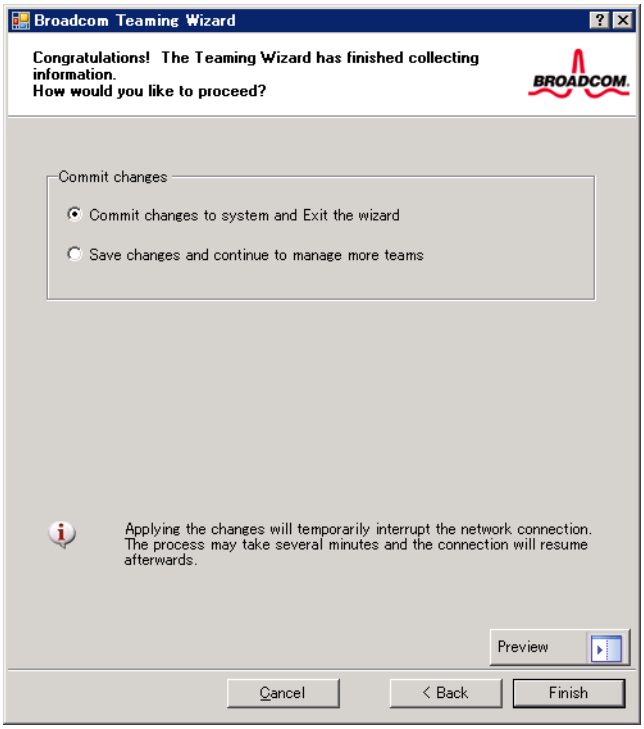

Figure B.82 Team creation dialog box

10 In response to the following message, click [Yes].

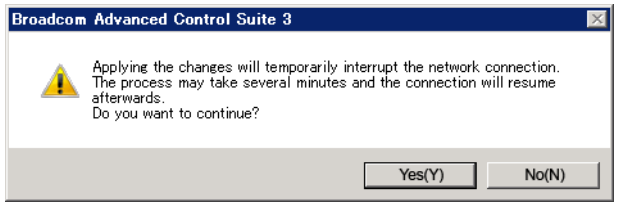

Figure B.83 Message dialog box

11 When the team is created, a virtual adapter is also created in [Broadcom Advanced Control Suite 3].

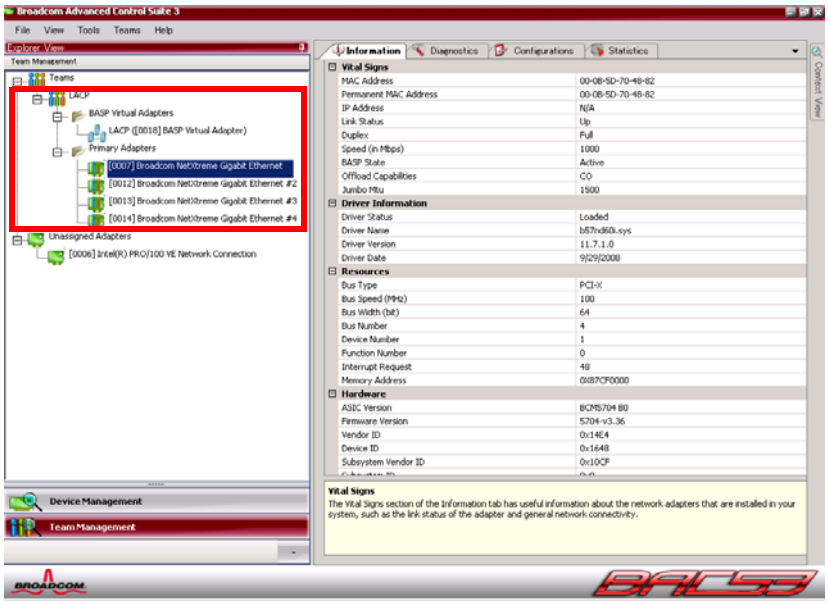

Figure B.84 [Broadcom Advanced Control Suite 3] window

12 Set an IP address for the created virtual adapter on [Network Connections] of Windows. (Device name "BASP Virtual Adapter" is assigned to the adapter.)

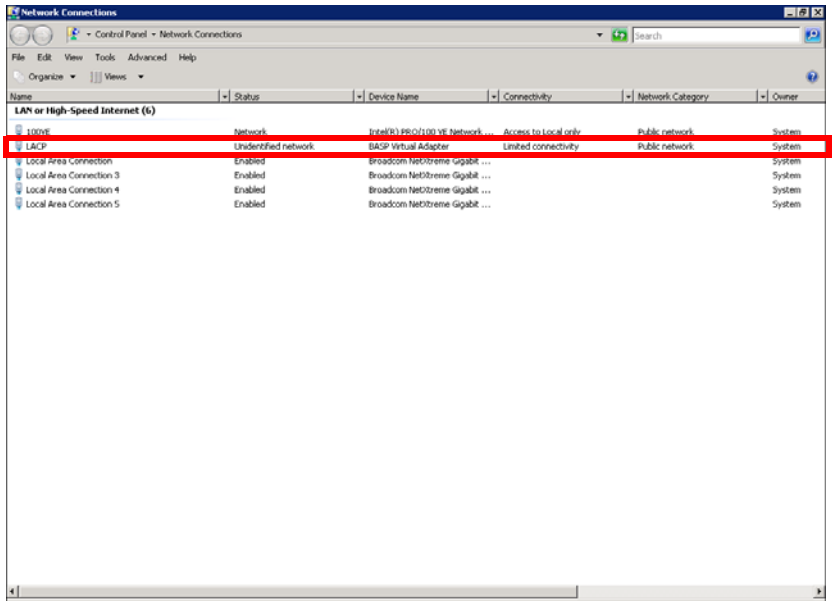

Figure B.85 [Network Connections] window