DL3600
DOT MATRIX PRINTER
PARTS CATALOGUE

FUJITSU

This document is used for

maintenance purpose only.

The illustration of the part

does not guarantee its availability.

DL3600

DOT MATRIX PRINTER

PARTS CATALOGUE

FUJITSU LIMITED

Communications and Electronics

Tokyo,Japan

REVISION RECORD		
Edition	Date published	Revised contents
01	June,1991	First edition
Specification NO.62FH6505E		

The contents of this manual may be revised without prior notice.

All Rights Reserved,Copyright © 1991 FUJITSU LIMITED. Printed in Japan.
No part of this manual may be reproduced in any form without permission.

Address your comments and inquiries on this manual to:

FUJITSU AMERICA, INC.
3055 Orchard Drive, San Jose
CA 95134-2017, U.S.A.
TEL: (1-408) 432-1300
FAX: 432-1318
TLX: 176207

FUJITSU AUSTRALIA LIMITED
475 Victoria Avenue, Chatswood
N.S.W., 2067, AUSTRALIA
TEL: (61-2) 410-4555
FAX: 411-8603
TLX: 25233

FUJITSU CANADA, INC.
6280 Northwest Drive, Mississauga
Ontario, L4V 1J7, CANADA
TEL: (1-416) 673-8666
FAX: 673-8677
TLX: 968132

FUJITSU DEUTSCHLAND GmbH
Frankfurter Ring 211
8000 München 40, F.R. GERMANY
TEL: (49-89) 32378-0
FAX: 32378-100
TLX: 897106

FUJITSU ESPAÑA, S.A.
Edificio Torre Europa
Paseo de la Castellana 95, Madrid 28046, SPAIN
TEL: (34-1) 581-8000
FAX: 581-8300
TLX: 23887

FUJITSU EUROPE LIMITED
2 Longwalk Road, Stockley Park, Uxbridge
Middlesex, UB11 1AB, ENGLAND
TEL: (44-81) 573-4444
FAX: 573-2643
TLX: 263871

FUJITSU FRANCE S.A.
17, rue Olof palme
94006 Créteil cedex, FRANCE
TEL: (33-43) 99 40 00
FAX: 99 07 00
TLX: 262 661

FUJITSU HONG KONG LIMITED
Room 1831, Sun Hung Kai Centre
30 Harbour Road, HONG KONG
TEL: (852-5) 8915780
FAX: 742917
TLX: 62667

FUJITSU ITALIA S.p.A.
Via Melchiorre Gioia, 8-20124 Milano, ITALY
TEL: (39-2) 6572741
FAX: 6572257
TLX: 350142

FUJITSU NORDIC AB
Torggatan 8, S-171 54 Solna, SWEDEN
TEL: (46-8) 764 76 90
FAX: 28 03 45
TLX: 13411

FUJITSU LIMITED
International Operations
Marunouchi 1-6-1, Chiyoda-ku, Tokyo 100, JAPAN
TEL: (81-3) 3216-3211
FAX: 3213-7174
TLX: J22833
Cable: "FUJITSU LIMITED TOKYO"

This is parts catalogue for DL3600 DOT MATRIX PRINTER.
This manual is for service engineers.

There are several models of DL3600 DOT MATRIX PRINTER.
This manual covers all models.

This manual consists of two parts.:Parts List and Parts Drawings.
Parts List has layer structure. you can find assembly levels.
Parts Drawing does not have the layer structure.
You can see the model difference from the parts list easily.

There are other manuals for service engineers as follows.
Especially maintenance manual has close relationship to this manual.

- DL3600 DOT MATRIX PRINTER MAINTENANCE MANUAL

- DL3600 DOT MATRIX PRINTER SCHEMATIC DIAGRAM

- DL3600 DOT MATRIX PRINTER USER'S MANUAL

- DL3600 DOT MATRIX PRINTER PRODUCT DESCRIPTION

CONTENTS

1. HOW TO REFER TO THIS MANUAL 1

2. PARTS LIST AND PARTS DRAWING OF WHOLE PRINTER LEVEL 3

Figure 1 Upper cover assembly 4

Figure 2 Lower cover assembly 8

Figure 3 Printer mechanism assembly 10

Figure 4 Carriage assembly 16

1. HOW TO REFER TO THIS MANUAL

(Example)

DL3600 DOT MATRIX PRINTER

Upper Cover Assembly

E: 200V, CENTRO (FOR ASIA)
D: 100V, CENTRO (FOR ASIA)
C: 200V, CENTRO (FESA)
B: 200V, CENTRO
A: 100V, CENTRO

Index. Number	Composition & Quantity						Specification	Parts name (Description)	A	B	C	D	E	Remarks
1~30	1		(9)				D06B-5230-B611	DL3600 Printer (11)	○	-	-	-	-	
	1		(10)				D06B-5230-B621	DL3600 Printer (12)	-	○	-	-	-	
	1						D06B-5230-B631	DL3600 Printer	-	-	○	-	-	
	1						D06B-5230-B618	DL3600 Printer	-	-	-	○	-	
(1)	1						D06B-5230-B619	DL3600 Printer	-	-	-	-	○	
1		1					D05B-4010-C611	DL3600 Printer unit	○	-	-	-	-	
		1					D05B-4010-C621	DL3600 Printer unit	-	○	-	-	-	
		1					D05B-4010-C631	DL3600 Printer unit	-	-	○	-	-	
		1					D05B-4010-C618	DL3600 Printer unit	-	-	-	○	-	
		1		(6)			D05B-4010-C619	DL3600 Printer unit	-	-	-	-	○	
2~20		1					D220-4013-T301	Upper cover assembly	○	○	○	-	-	
		1		(7)			D220-4013-T403	Upper cover assembly	-	-	-	○	○	
2			1				D220-4013-Y201#CO1	Upper cover	○	○	○	-	-	
	(2)		1				D220-4013-Y201#CO2	Upper cover	-	-	-	○	○	
3~5			1				D220-4013-V302	Sub cover assembly	○	○	○	○	○	
3				1			D220-4013-X302	Sub cover	○	○	○	○	○	
4		(3)		1			D860-1156-X691	Slider	○	○	○	○	○	
5				1			D860-1156-X692	Dustproof sheet	○	○	○	○	○	
6		(4)	1				D860-1156-X833	Cover piece	○	○	○	○	○	
7			1				D860-1156-Y670	OC Knob	○	○	○	○	○	
8~13			1				D220-4013-V303	Top panel assembly	○	○	○	○	○	
8				1			D220-4013-V304	Top cover assembly	○	○	○	○	○	
9				1			D220-4013-X303	OP cover	○	○	○	○	○	
10				1			D220-4013-X305	PCB cover	○	○	○	○	○	
11				1			D860-9029-X070	Panel sheet	○	○	○	○	○	
12				1			D16B-9727-0001	RO36AA	○	○	○	○	○	
13				2			F6-SNATP2-3×8S	Tap tight	○	○	○	○	○	
14~15			1			(8)	D860-1156-V927	Transparent cover assembly	○	○	○	○	○	
14	(5)			1			D860-1156-V928	Transparent cover F assembly	○	○	○	○	○	
15				1			D860-1156-X977	Transparent cover R	○	○	○	○	○	
16			1				D220-4013-X307	Slide piece	○	○	○	○	○	
17~20			1				D860-1156-V987	Rear cover assembly	-	-	-	○	○	
17				1			D860-1156-V981	Rear cover assembly	○	○	○	○	○	
18				1			D860-1156-X983	Guide R	○	○	○	○	○	
19				1			D860-1156-X985	Guide C	○	○	○	○	○	
20				1			D860-1156-X984	Guide L	○	○	○	○	○	
21		2					CT-BTP-4×14-M-ZN-NITTO	Tap tight	○	○	○	○	○	
22		1					D860-1140-X514	Platen Knob	○	○	○	○	○	
23		1					D16B-9688-0101	RP26AA	○	○	○	○	○	
		1					D05B-2903-D101	ROM Board SK	○	○	○	○	○	

(1) —— Index number shows the component in the drawing.

(2) (3) (4) (5) (6) (7) (8) (9) (10) — This shows the construction level.

2 level of component has (3) and (4) and following two same level component. (2) and (5) are in the same level and belong to the same upper level component (in this case (6) or (7)).

Note: (3) and (4) are in the same level as (8).
But (3) and (4) belong to (2).

(11) (12) These show model difference information.
This list shows five models in parallel.
(A to E)

(11) shows that component (9) belongs to A
(12) shows that component (10) does not belong to A

2. PARTS LIST AND PARTS DRAWINGS OF WHOLE PRINTER LEVEL

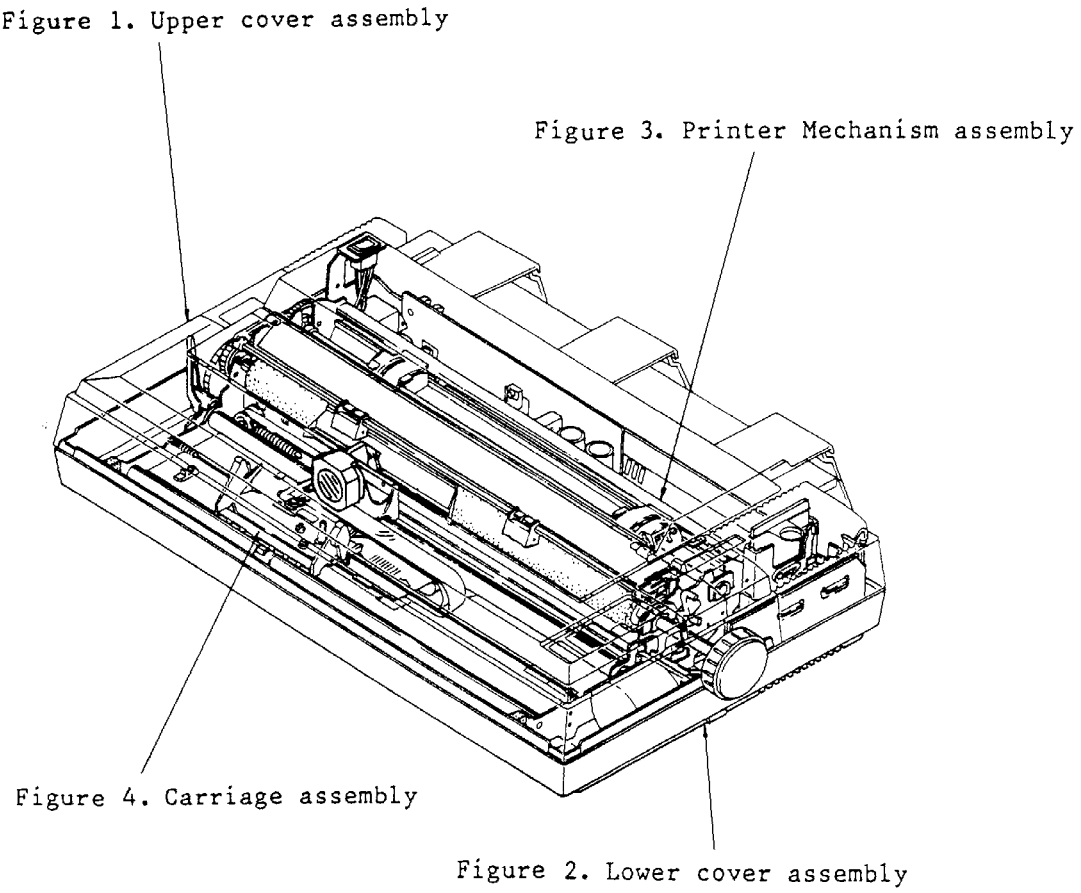

Figure 1. Upper cover assembly

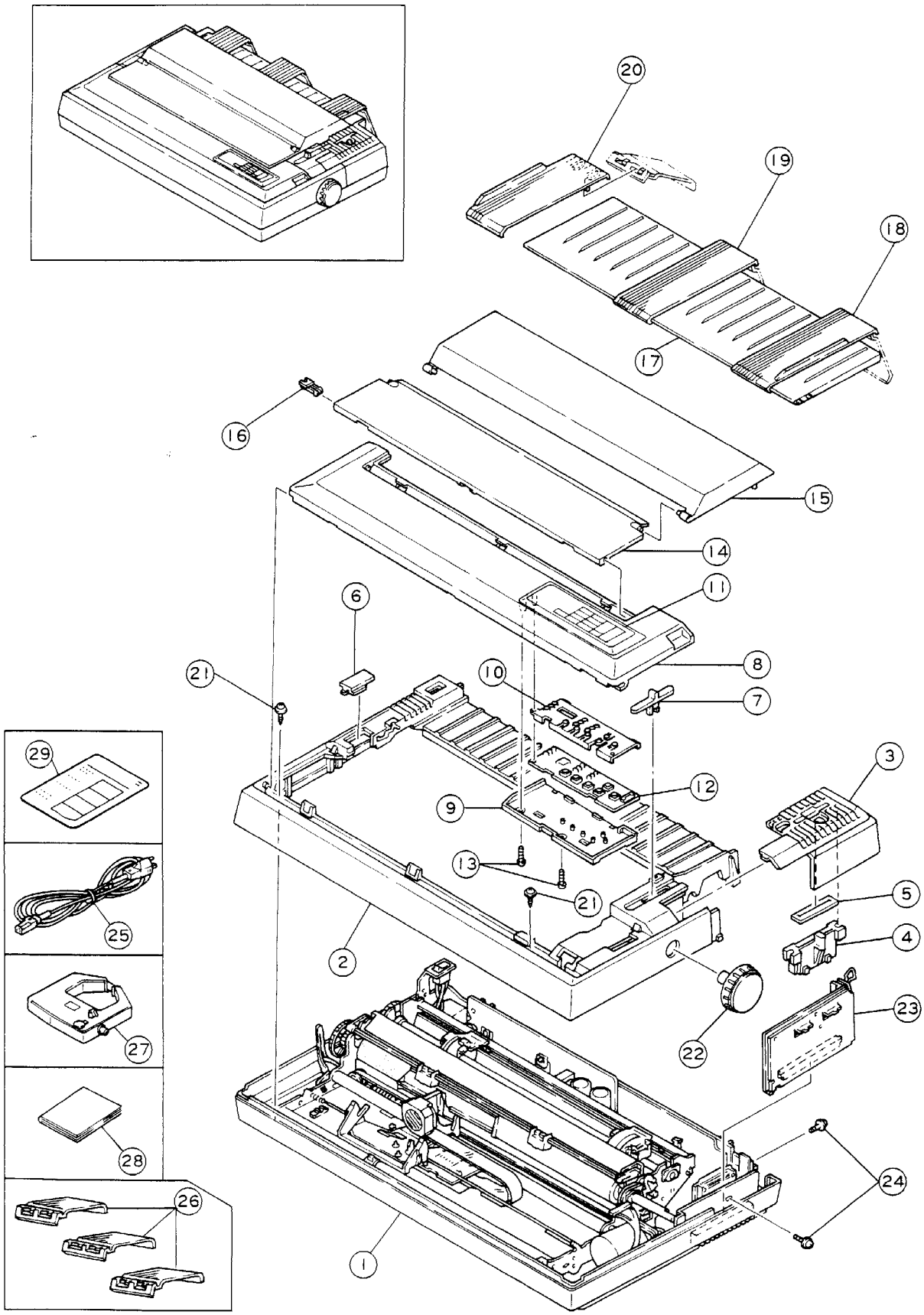

Upper Cover Assembly

E : 200V, CENTRO (FOR ASIA)
D : 100V, CENTRO (FOR ASIA)
C : 200V, CENTRO (FESA)
B : 200V, CENTRO
A : 100V, CENTRO

Index. Number	Composition & Quantity						Specification	Parts name (Description)	A	B	C	D	E	Remarks
1~30	1						D06B-5230-B611	DL3600 Printer	○	-	-	-	-	
	1						D06B-5230-B621	DL3600 Printer	-	○	-	-	-	
	1						D06B-5230-B631	DL3600 Printer	-	-	○	-	-	
	1						D06B-5230-B618	DL3600 Printer	-	-	-	○	-	
	1						D06B-5230-B619	DL3600 Printer	-	-	-	-	○	
1		1					D05B-4010-C611	DL3600 Printer unit	○	-	-	-	-	
		1					D05B-4010-C621	DL3600 Printer unit	-	○	-	-	-	
		1					D05B-4010-C631	DL3600 Printer unit	-	-	○	-	-	
		1					D05B-4010-C618	DL3600 Printer unit	-	-	-	○	-	
		1					D05B-4010-C619	DL3600 Printer unit	-	-	-	-	○	
2~20		1					D220-4013-T301	Upper cover assembly	○	○	○	-	-	
		1					D220-4013-T403	Upper cover assembly	-	-	-	○	○	
2			1				D220-4013-Y201#CO1	Upper cover	○	○	○	-	-	
			1				D220-4013-Y201#CO2	Upper cover	-	-	-	○	○	
3~5			1				D220-4013-V302	Sub cover assembly	○	○	○	○	○	
3				1			D220-4013-X302	Sub cover	○	○	○	○	○	
4				1			D860-1156-X691	Slider	○	○	○	○	○	
5				1			D860-1156-X692	Dustproof sheet	○	○	○	○	○	
6			1				D860-1156-X833	Cover piece	○	○	○	○	○	
7			1				D860-1156-Y670	OC Knob	○	○	○	○	○	
8~13			1				D220-4013-V303	Top panel assembly	○	○	○	○	○	
8				1			D220-4013-V304	Top cover assembly	○	○	○	○	○	
9				1			D220-4013-X303	OP cover	○	○	○	○	○	
10				1			D220-4013-X305	PCB cover	○	○	○	○	○	
11				1			D860-9029-X070	Panel sheet	○	○	○	○	○	
12				1			D16B-9727-0001	RO36AA	○	○	○	○	○	
13				2			F6-SNATP2-3×8S	Tap tight	○	○	○	○	○	
14~15			1				D860-1156-V927	Transparent cover assembly	○	○	○	○	○	
14				1			D860-1156-V928	Transparent cover F assembly	○	○	○	○	○	
15				1			D860-1156-X977	Transparent cover R	○	○	○	○	○	
16			1				D220-4013-X307	Slide piece	○	○	○	○	○	
17~20			1				D860-1156-V987	Rear cover assembly	-	-	-	○	○	
17				1			D860-1156-V981	Rear cover assembly	○	○	○	○	○	
18				1			D860-1156-X983	Guide R	○	○	○	○	○	
19				1			D860-1156-X985	Guide C	○	○	○	○	○	
20				1			D860-1156-X984	Guide L	○	○	○	○	○	
21		2					CT-BTP-4×14-M-ZN-NITTO	Tap tight	○	○	○	○	○	
22		1					D860-1140-X514	Platen Knob	○	○	○	○	○	
23		1					D16B-9688-0101	RP26AA	○	○	○	○	○	
		1					D05B-2903-D101	ROM Board SK	○	○	○	○	○	

Figure 1. Upper cover assembly

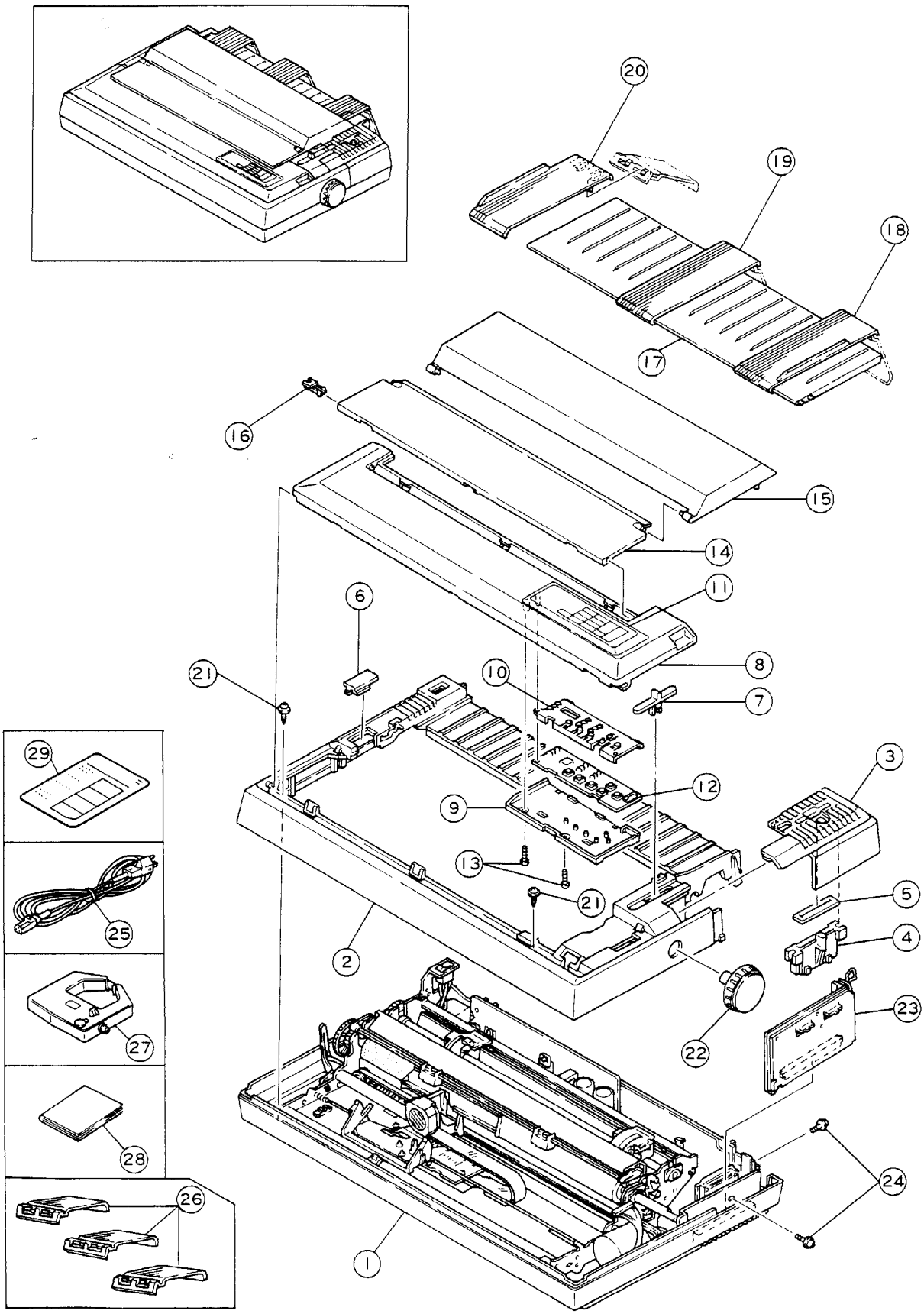

E: 200V, CENTRO (FOR ASIA)
D: 100V, CENTRO (FOR ASIA)
C: 200V, CENTRO (FESA)
B: 200V, CENTRO
A: 100V, CENTRO

Upper Cover Assembly

Index. Number	Composition & Quantity						Specification	Parts name (Description)	A	B	C	D	E	Remarks
24		2					F6-SW2NA-3×6S-M-Ni1A	Screw	○	○	○	○	○	
25~29		1					D06B-5230-H611	Accessories	○	-	-	○	-	
		1					D06B-5230-H621	Accessories	-	○	○	-	○	
25			1				CT-SP11-KDK	AC CORD	○	-	-	○	-	for 100V
			1				CT-SP12-KDK	AC CORD	-	○	○	-	○	for 200V
26			3				D860-1156-X986	Sub Guide	○	○	○	○	○	
27			1				D30L-9001-0601	Ribbon cassette	○	○	○	○	○	FJ-brand
28			1				62FH5009E	user's manual	○	○	○	○	○	
29			1				62FH5013E	Operation Guide	○	○	○	○	○	

Figure 2. Lower cover Assembly

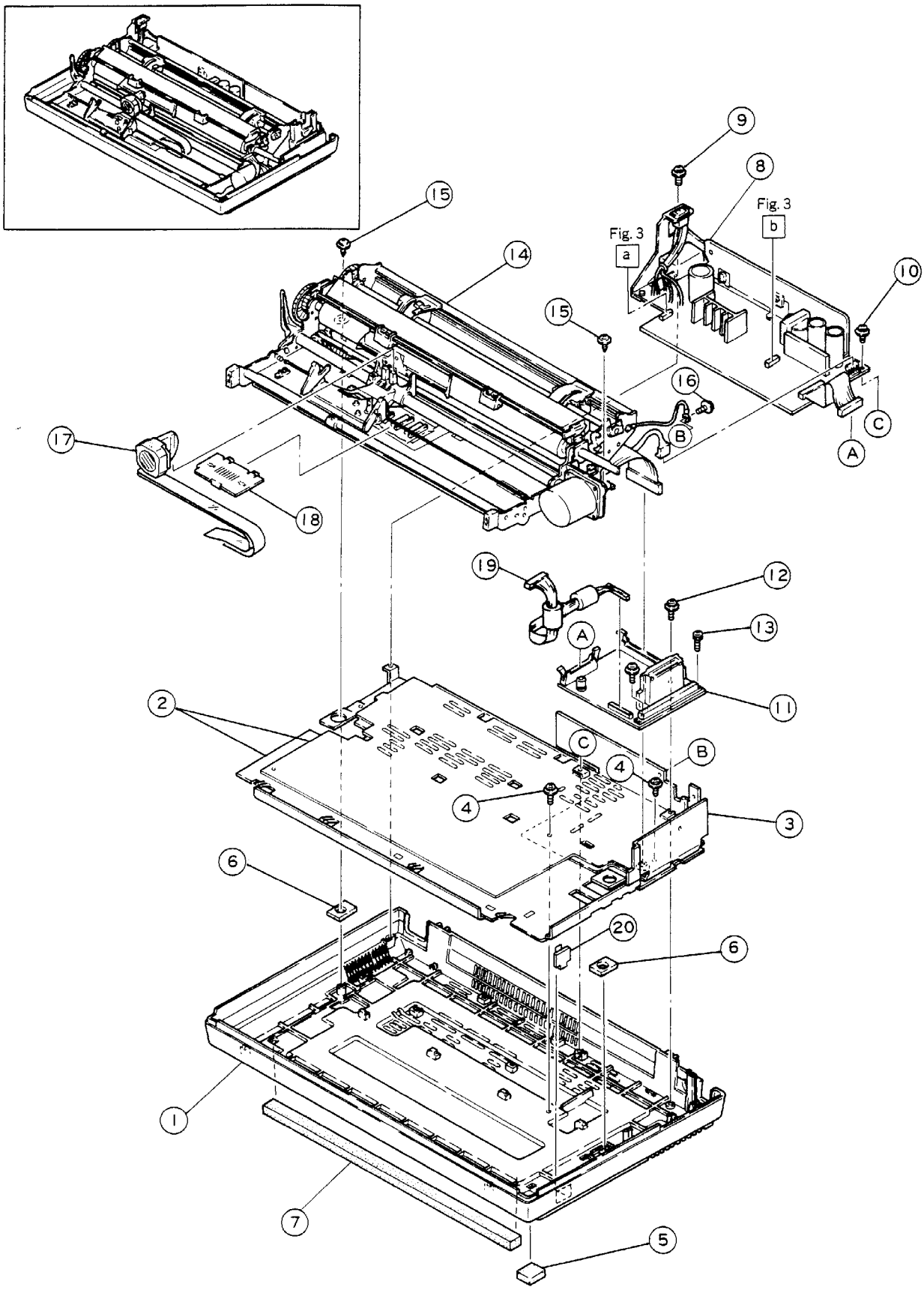

Lower Cover Assembly

E: 200V, CENTRO (FOR ASIA)
D: 100V, CENTRO (FOR ASIA)
C: 200V, CENTRO (FESA)
B: 200V, CENTRO
A: 100V, CENTRO

Index. Number	Composition & Quantity						Specification	Parts name (Description)	A	B	C	D	E	Remarks
1~19	1						D05B-4010-C611	DL3600 Printer unit	○	-	-	-	-	
	1						D05B-4010-C621	DL3600 Printer unit	-	○	-	-	-	
	1						D05B-4010-C631	DL3600 Printer unit	-	-	○	-	-	
	1						D05B-4010-C618	DL3600 Printer unit	-	-	-	○	-	
	1						D05B-4010-C619	DL3600 Printer unit	-	-	-	-	○	
1~7		1					D860-1156-V991	Lower cover assembly	○	○	○	-	-	
		1					D860-1156-T680	Lower cover assembly	-	-	-	○	○	
1			1				D860-1156-X961	Lower cover	○	○	○	-	-	
			1				D860-1156-X694	Lower cover	-	-	-	○	○	
2			1				D860-1156-V964	Shield plate assembly	○	○	○	○	○	
3			1				D860-1156-X965	Under plate	○	○	○	○	○	
4			2				F6-SW2NA-3×8S-M-Ni1A	Screw	○	○	○	○	○	
5			4				CT-SJ-5023-SUMITOMO-3M	Rubber foot	○	○	○	-	-	
			5				CT-SJ-5023-SUMITOMO-3M	Rubber foot	-	-	-	○	○	
6			2				D860-1156-X821	Rubber Sheet	○	○	○	○	○	
7			1				D860-1156-X637	Soundproof Material	○	○	○	-	-	
8		1					D16B-9693-0102	PW21AB	○	-	-	○	-	
		1					D16B-9693-0112	PW21BB	-	⊖	○	-	○	
		(1)					D16B-9592-0312/03	PW02BB	-	-	○	-	-	Note 1
9		1					F6-SW2NA-4×10S-M-Ni1A	Screw	○	○	○	○	○	
10		1					F6-SW2NA-3×8S-M-Ni1A	Screw	○	○	○	○	○	
11		1					D16B-9688-0005	RC26BA	○	○	○	○	○	
12		2					F6-SW2NA-3×8S-M-Ni1A	Screw	○	○	○	○	○	
13		1					F6-SW3NA-2.5×10S-M-Ni1A	Screw	○	○	○	○	○	
14		1					D86B-1156-B630	Printer unit	○	-	-	○	○	
		1					D86B-1156-B626	Printer unit	-	○	-	-	-	
		1					D86B-1156-B625	Printer unit	-	-	○	-	-	
15		2					D860-1156-X819	Screw	○	○	○	○	○	
16		1					F6-SW2NA-4×8S-M-Ni1A	Screw	○	○	○	○	○	
17		1					D86B-1138-D782 C782.	Print head	○	○	○	○	○	
18		1					D860-1156-X398	Connector cover	○	○	○	○	○	
19		1					D860-1156-V689	Op cable assembly	○	○	○	○	○	
20		1					CT-K105G-KITAGAWA	Clamp	○	○	○	○	○	

Note 1 : Sub parts for PW21BB.

Figure 3. Printer Mechanism assembly

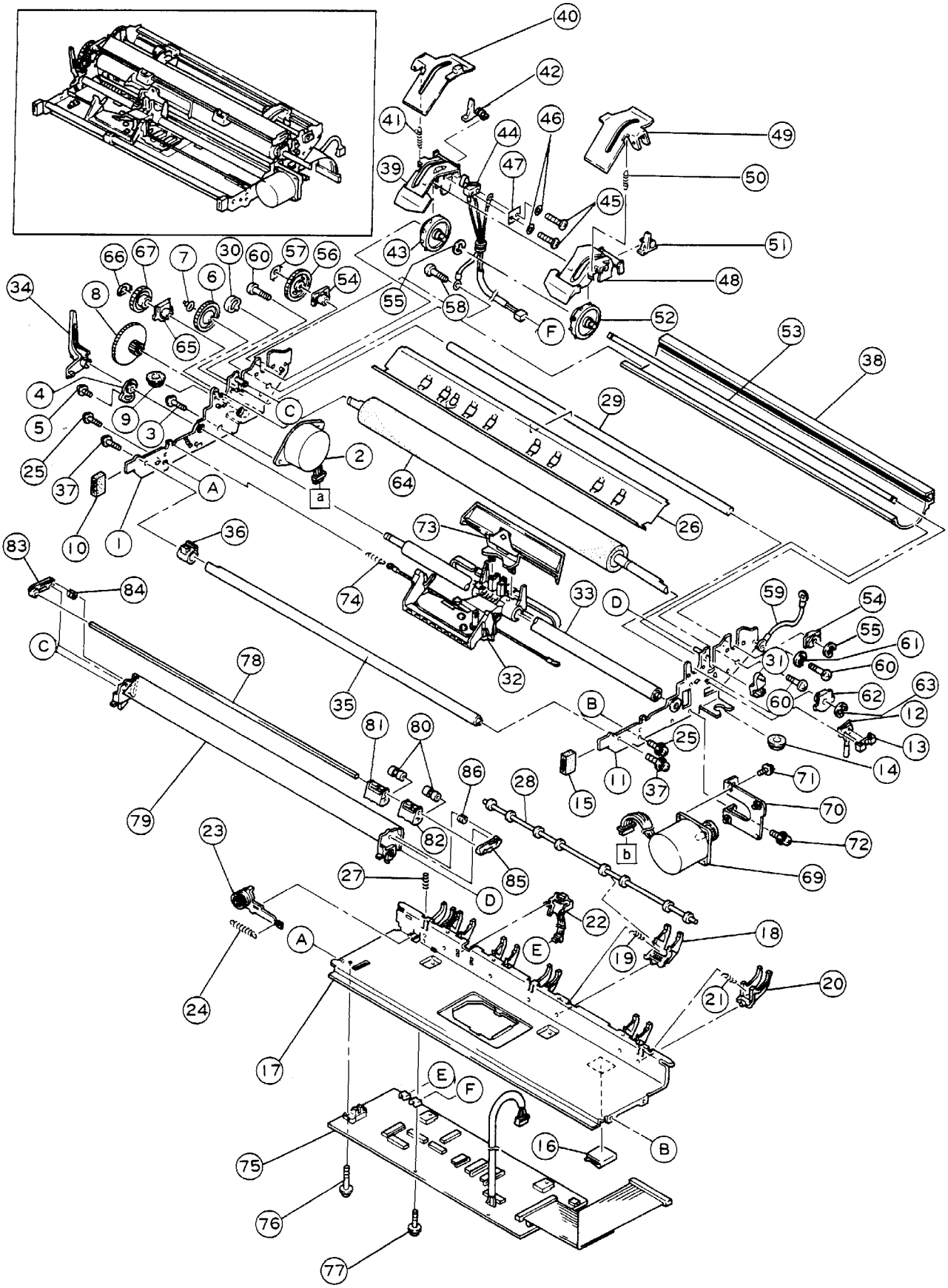

Printer Mechanism Assembly

E: 200V, CENTRO (FOR ASIA)
D: 100V, CENTRO (FOR ASIA)
C: 200V, CENTRO (FESA)
B: 200V, CENTRO
A: 100V, CENTRO

Index. Number	Composition & Quantity						Specification	Parts name (Description)	A	B	C	D	E	Remarks
1~86	1						D86B-1156-B630	Printer unit	○	-	-	○	○	
	1						D86B-1156-B626	Printer unit	-	○	-	-	-	
	1						D86B-1156-B625	Printer unit	-	-	○	-	-	
1~74		1					D86B-1156-C630	Printer mechanism unit	○	-	-	○	○	
		1					D86B-1156-C626	Printer mechanism unit	-	○	-	-	-	
		1					D86B-1156-C625	Printer mechanism unit	-	-	○	-	-	
1~10			1				D860-1156-T100	Side frame L assembly	○	○	○	○	○	
1				1			D860-1156-V100	Side frame L sub assembly	○	○	○	○	○	
2				1			CT-55SIM-25D6B - MATSUSHITA	Line feed motor assembly	○	○	○	○	○	
3				2			F6-SW2NA-3×8S	Screw	○	○	○	○	○	
4				1			D860-1144-X213	Eccentric plate L	○	○	○	○	○	
5				1			F6-SW2NA-3×5S	Screw	○	○	○	○	○	
6				1			D860-1144-X291	Shift gear	○	○	○	○	○	
7				1			D860-1156-X292	Compression spring	○	○	○	○	○	
8				1			D860-1156-X295	Idle gear	○	○	○	○	○	
9				1			D860-1156-X118	Rubber bush	○	○	○	○	○	
10				1			D860-1156-X119	Rubber bush	○	○	○	○	○	
11~15			1				D860-1156-T105	Side frame R assembly	○	○	○	○	○	
11				1			D860-1156-V105	Side frame R sub assembly	○	○	○	○	○	
12				1			D860-1156-V126	PS switch assembly	○	○	○	○	○	
13				1			D860-1156-X126	Switch holder	○	○	○	○	○	
14				1			D860-1156-X118	Rubber bush	○	○	○	○	○	
15				1			D860-1156-X119	Rubber bush	○	○	○	○	○	
16~24			1				D860-1156-V142	Front stay assembly	○	○	○	○	○	
16				1			CT-MFC-1000-KITAGAWA	Flat cable crip	○	○	○	○	○	
17				1			D860-1156-X132	Front stay	○	○	○	○	○	
18				4			D860-1156-X135	Roller lever	○	○	○	○	○	
19				4			D860-1156-X136	Tension spring	○	○	○	○	○	
20				3			D860-1156-X143	Push lever	○	○	○	○	○	
21				3			D860-1156-X144	Tension spring	○	○	○	○	○	
22				1			D860-1156-V145	PE assembly	○	○	○	○	○	
23				1			D860-1156-V211	Tension pulley assembly	○	○	○	○	○	
24				1			D860-1156-X205	Tension spring	○	○	○	○	○	
25			4				F6-SW2NA-3×8S	Screw	○	○	○	○	○	
26			1				D860-1156-X272	Paper cradle	○	○	○	○	○	

Figure 3. Printer Mechanism assembly

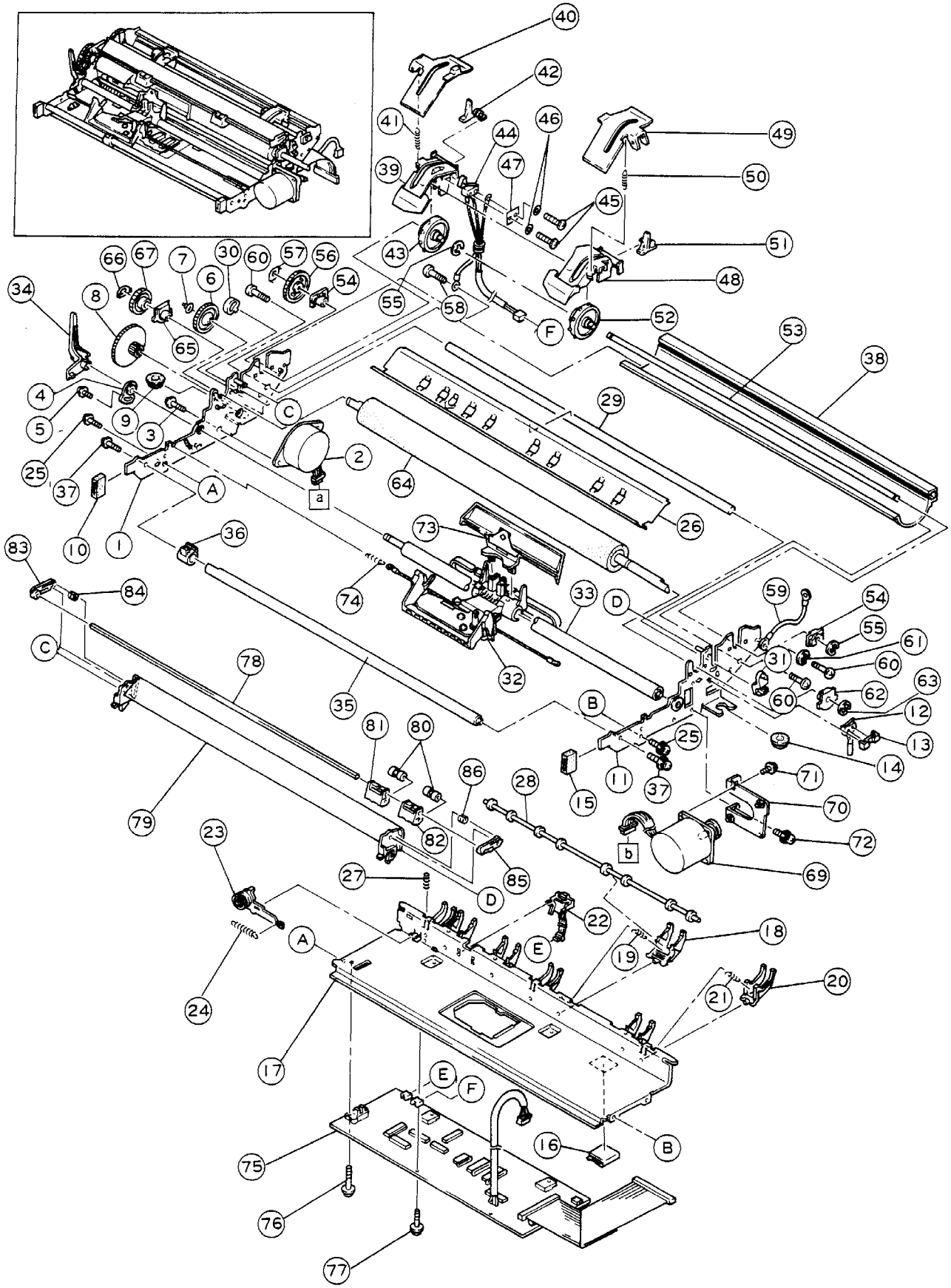

E: 200V, CENTRO (FOR ASIA)
D: 100V, CENTRO (FOR ASIA)
C: 200V, CENTRO (FESA)
B: 200V, CENTRO
A: 100V, CENTRO

Printer Mechanisum Assembly

Index. Number	Composition & Quantity						Specification	Parts name (Description)	A	B	C	D	E	Remarks
27			3				D860-1156-X275	Spring	○	○	○	○	○	
28			1				D860-1156-V138	Roller shaft assembly	○	○	○	○	○	
29~31			1				D860-1156-V162	OC shaft assembly	○	○	○	○	○	
29				1			D860-1144-X162	OC shaft	○	○	○	○	○	
30				1			D860-1156-X163	PF shift lever	○	○	○	○	○	
31				1			D860-1144-X164	OC lever	○	○	○	○	○	
32			1				D860-1156-T169	Carriage assembly	○	-	-	○	○	
			1				D860-1156-T168	Carriage assembly	-	○	○	-	-	
33			1				D860-1144-X212	Main stay shaft	○	○	○	○	○	
34			1				D860-1156-X216	Copy control lever	○	○	○	○	○	
35			1				D860-1156-X219	Sub stay shaft	○	○	○	○	○	
36			1				D860-1156-X221	Slider	○	○	○	○	○	
37			2				F6-SW2NA-4×8S	Screw	○	○	○	○	○	
38~57			1				D860-1156-V622	Rear stay assembly	-	○	○	-	-	
			1				D860-1156-V624	Rear stay assembly	○	-	-	○	○	
38				1			D860-1156-X242	Rear stay	○	○	○	○	○	
39~47				1			D860-1156-V625	Sprocket L assembly	-	○	○	-	-	
				1			D860-1156-V626	Sprocket L assembly	○	-	-	○	○	
39					1		D860-1156-X265	Housing L	○	○	○	○	○	
40					1		D860-1156-X267	Paper holder L	○	○	○	○	○	
41					1		D860-1144-X249	Tension spring	○	○	○	○	○	
42					1		D860-1156-X250	Lock lever L	○	○	○	○	○	
43					1		D860-1156-X252	Sprocket Wheel	○	○	○	○	○	
44					1		D860-1156-V152	PNES assembly	-	○	○	-	-	
							D860-1156-V150	PNES assembly	○	-	-	○	○	
45					2		CT-BTP-2×12-M-Zn-NITTO	Tapping screw	○	○	○	○	○	
46					2		F6-WM-2S	Washer	○	○	○	○	○	
47					1		D860-1156-X150	Barrier plate	○	○	○	○	○	
48~52				1			D860-1156-V266	Sprocket R assembly	○	○	○	○	○	
48					1		D860-1156-X266	Housing R	○	○	○	○	○	
49					1		D860-1156-X268	Paper holder R	○	○	○	○	○	
50					1		D860-1144-X249	Tension spring	○	○	○	○	○	
51					1		D860-1156-X251	Lock lever R	○	○	○	○	○	
52					1		D860-1156-X252	Sprocket wheel	○	○	○	○	○	
53				1			D860-1156-X256	Square shaft	○	○	○	○	○	
54				2			D860-1156-X257	Bearing SR	○	○	○	○	○	
55				2			F6-ER-6SUS	Retaining ring	○	○	○	○	○	
56				1			D860-1144-X258	SR gear	○	○	○	○	○	
57				1			D860-1144-X259	Spring	○	○	○	○	○	
58			1				F6-SW2NA-3×8S-M-Ni1A	Screw	○	○	○	○	○	

Figure 3. Printer Mechanism assembly

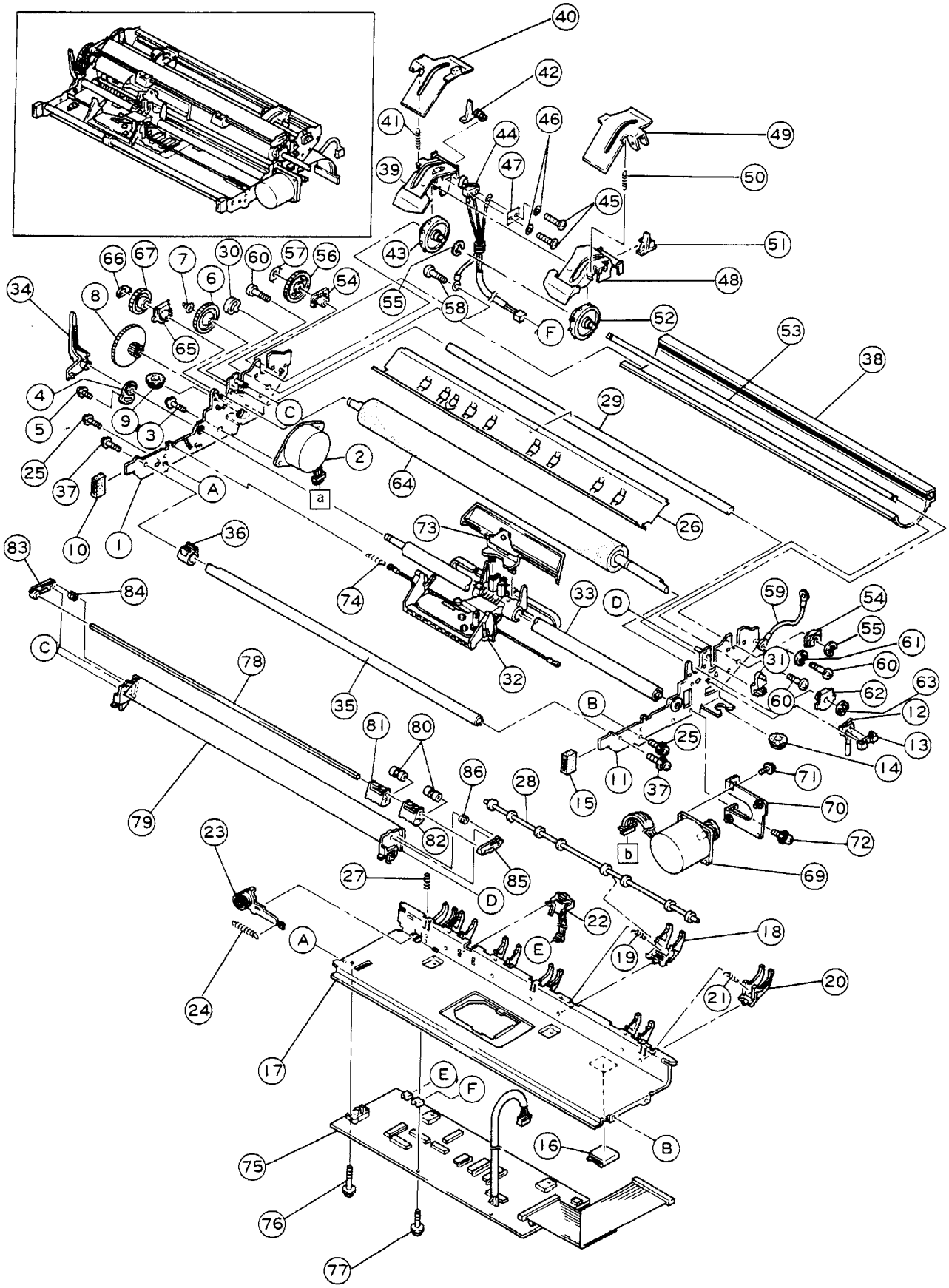

Printer Mechanism Assembly

E: 200V, CENTRO (FOR ASIA)
D: 100V, CENTRO (FOR ASIA)
C: 200V, CENTRO (FESA)
B: 200V, CENTRO
A: 100V, CENTRO

Index. Number	Composition & Quantity						Specification	Parts name (Description)	A	B	C	D	E	Remarks
59			1				D660-9203-T591#L130-R0	Cable	○	○	-	○	○	
			1				D660-9203-T041#L130-R0	Cable	-	-	○	-	-	
60			4				CT-STB-4×10-M-Ni1A-NITTO	Tap tight	○	○	○	○	○	
61			1				F6-WM-4S	Washer	○	○	○	○	○	
62			1				D860-1156-X290	Bearing PL	○	○	-	○	○	
63			1				F6-ER-8SUS	Retaining ring	○	○	-	○	○	
64~67			1				D860-1156-V294	Platen assembly	○	○	-	○	○	
64~68			1				D860-1156-V282	Platen assembly	-	-	○	-	-	
64				1			D860-1156-V296	Platen roll assembly	○	○	-	○	○	
				1			D860-1144-V284	Platen roll assembly	-	-	○	-	-	
65				1			D860-1156-X290	Bearing PL	○	○	-	○	○	
				2			D860-1156-X286	Platen bearing	-	-	○	-	-	
66				1			D860-1144-X288	Spring	○	○	○	○	○	
67				1			D860-1144-X287	Platen gear	○	○	○	○	○	
68				1			F6-ER-8SUS	Retaining ring	-	-	○	-	-	
69~71			1				D860-1156-T301	Spacing motor assembly	○	○	○	○	○	
69				1			D860-1156-V301	Spacing motor assembly	○	○	○	○	○	
70				1			D860-1156-X301	Motor bracket	○	○	○	○	○	
71				3			F6-SW2NA-4×10S	Screw	○	○	○	○	○	
72			2				F6-SW2NA-3×8S	Screw	○	○	○	○	○	
73			1				D860-1156-V200	Card guide assembly	○	○	○	○	○	
74			1				D860-1124-Y808	Tension spring	○	○	○	○	○	
75		1					D16B-9592-0403	DV02AC	○	○	○	○	○	
76		1					F6-SW2NA-3×14S-M-Ni1A	Screw	○	○	○	○	○	
77		4					F6-SW2NA-3×10S-M-Ni1A	Screw	○	○	○	○	○	
78~86		1					D86B-1156-F341	Bail roller unit	○	○	○	○	○	
78			1				D860-1156-X322	Bail shaft	○	○	○	○	○	
79			1				D860-1156-Y341	Separator	○	○	○	○	○	
80			2				D860-1156-X327	Bail roller	○	○	○	○	○	
81			1				D860-1156-X329	Roller guide L	○	○	○	○	○	
82			1				D860-1156-X330	Roller guide R	○	○	○	○	○	
83			1				D860-1156-X331	Bail lever L	○	○	○	○	○	
84			1				D860-1144-Y333	Spring L	○	○	○	○	○	
85			1				D860-1156-X332	Bail lever R	○	○	○	○	○	
86			1				D860-1144-Y334	Spring R	○	○	○	○	○	

Figure 4. Carriage assembly

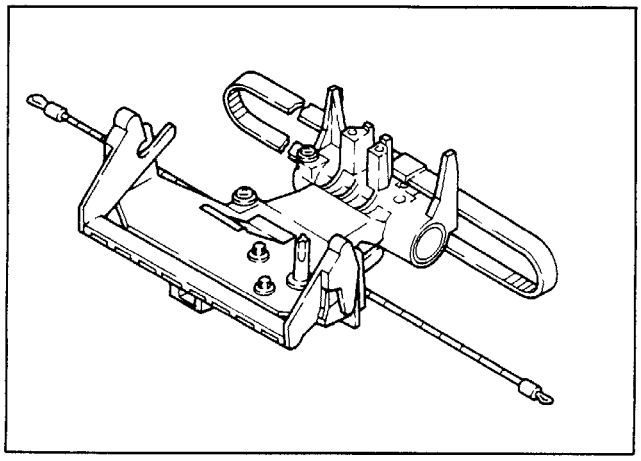

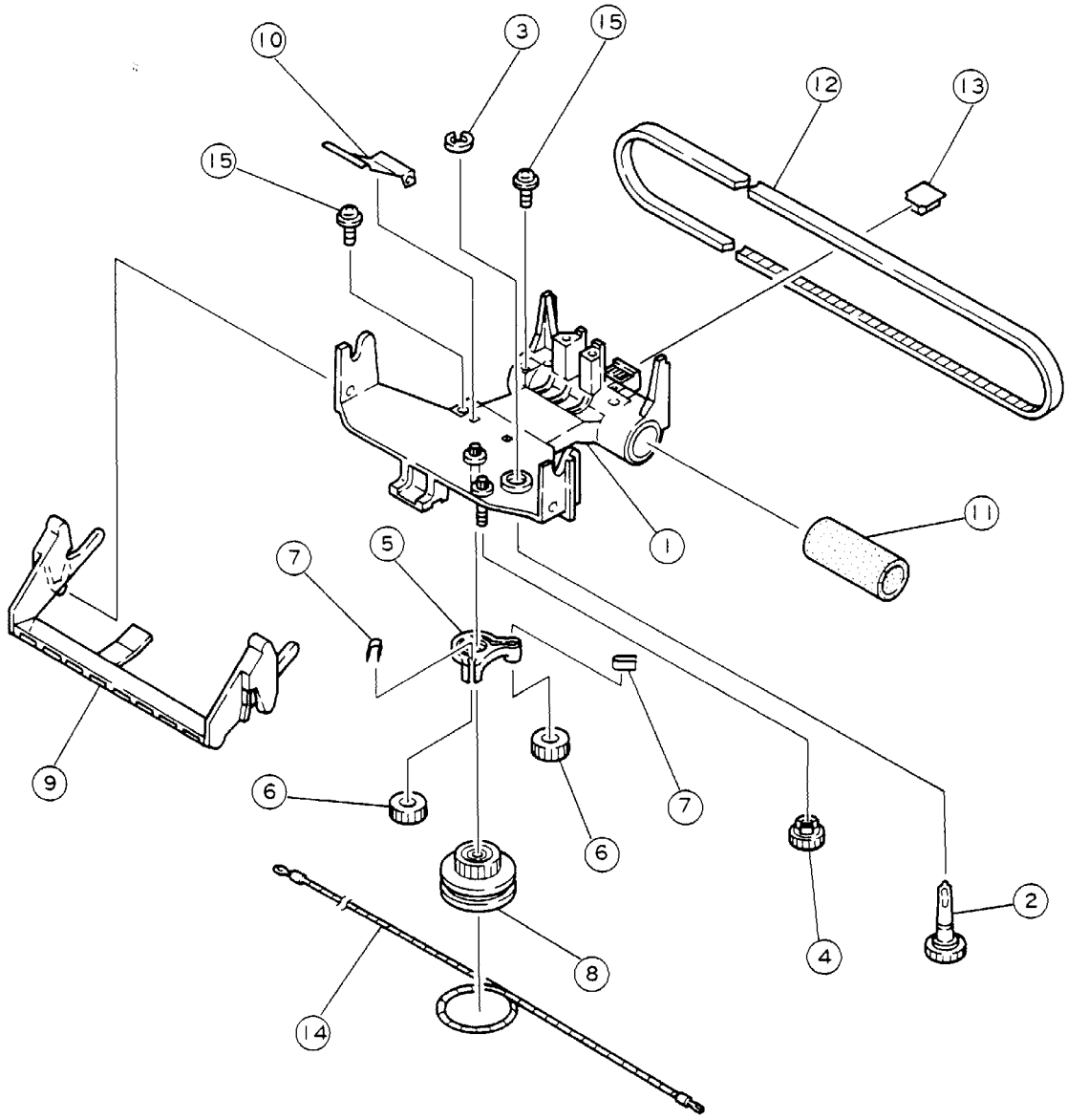

E: 200V, CENTRO (FOR ASIA)
D: 100V, CENTRO (FOR ASIA)
C: 200V, CENTRO (FESA)
B: 200V, CENTRO
A: 100V, CENTRO

Carriage Assembly

Index. Number	Composition & Quantity						Specification	Parts name (Description)	A	B	C	D	E	Remarks
1~15	1						D860-1156-T169	Carriage assembly	○	-	-	○	○	
	1						D860-1156-T168	Carriage assembly	-	○	○	-	-	
1~11		1					D860-1156-V169	Carriage sub assembly	○	-	-	○	○	
		1					D860-1156-V168	Carriage sub assembly	-	○	○	-	-	
1			1				D860-1156-V174	Carriage frame assembly	○	○	○	○	○	
2			1				D860-1144-V180	RF shaft assembly	○	○	○	○	○	
3			1				F6-ER-4SUS	Retaining ring	○	○	○	○	○	
4			1				D860-1156-X182	Gear	○	○	○	○	○	
5			1				D860-1156-X183	RF lever	○	○	○	○	○	
6			2				D860-1144-X209	Gear	○	○	○	○	○	
7			2				D860-1144-X208	Flat spring	○	○	○	○	○	
8			1				D860-1156-X186	Ribbon pulley	○	○	○	○	○	
9			1				D860-1156-X187	RC holder	○	○	○	○	○	
10			1				D860-1156-X189	Ribbon spring	○	-	-	○	○	
			1				D860-1156-V189	Ribbon spring assembly	-	○	○	-	-	
11			1				D860-1156-X175	Oil felt	○	○	○	○	○	
12		1					D30L-2201-0139	Timing belt	○	○	○	○	○	
13		1					D860-1156-X193	Lock spring	○	○	○	○	○	
14		1					D860-1144-V224	Ribbon rope assembly	○	○	○	○	○	
15		2					D860-1144-X195	Screw	○	○	○	○	○	